# HHGC 6.7F LB X

12NC: F095020

GTIN (EAN) code: 8007842950205



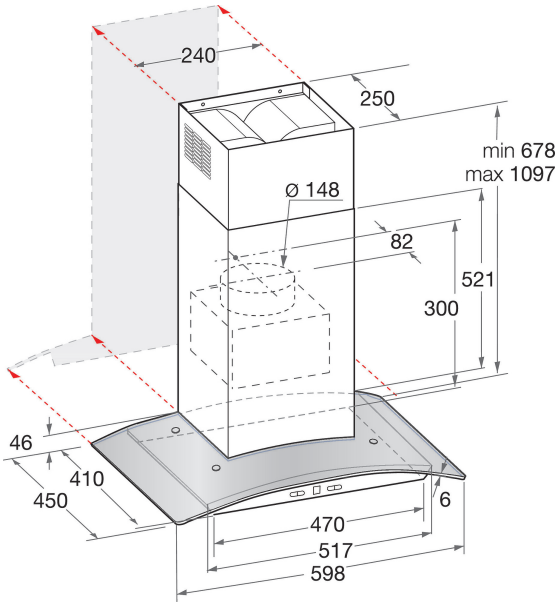


## MAIN FEATURES

| | |
|---|---|
| Product group | Hood |
| Colour body | Inox |
| Material body | Stainless steel / glass |
| Colour chimney | - |
| Material chimney | - |
| Typology | Wall-mounted |
| Installation type | Wall-mounted |
| Type of control | Electronic |
| Type of control settings | - |
| Decor panel options | - |
| Motor location | Integrated motor in hood body |
| Operating Mode | Convertible |
| Electrical connection rating (W) | 255 |
| Current (A) | 1,1 |
| Voltage (V) | 220-240 |
| Frequency (Hz) | 50 |
| Length of Electrical Supply Cord (cm) | 150 |
| Plug type | No |
| Chimney height (mm) | - |
| Height of product, without chimney (mm) | 0 |
| Height of the product | 1130 |
| Width of the product | 600 |
| Depth of the product | 450 |
| Minimum niche height | 0 |
| Minimum niche width | 0 |
| Niche depth | 0 |
| Net weight (kg) | 13.2 |

## TECHNICAL FEATURES

| | |
|---|---|
| Type of manual control devices | Soft buttons |
| Type of automatic control devices | - |
| Number of motors | 1 |
| Total power of the motors (W) | 250 |
| Number of speed settings: boost option availability | 4 |
| Boost presence | Yes |
| Maximum output air extraction ($m^3/h$) | 713 |
| Boost position air extraction ($m^3/h$) | 713 |
| Maximum output recirculating air ($m^3/h$) | 0 |
| Boost position output recirculating ($m^3/h$) | 0 |
| Light Control Type | On/Off |
| Number of lights | 2 |
| Type of lamps used | LED |
| Total power of the lamps (W) | 5 |
| Diameter of air outlet (mm) | 150 |
| No-return airflow flap | Yes |
| Grease filter material | Washable aluminium |
| Odour filter | Yes |

## PERFORMANCES

| | |
|---|---|
| Sound power at min. speed (2010/30/EU) | 35 |
| Sound power at max. speed (2010/30/EU) | 60 |
| Noise level with boost position (dB(A) re 1 pW) | 72 |