HHF 9.5 F AM X

12NC: F093969

GTIN (EAN) code: 8007842939699



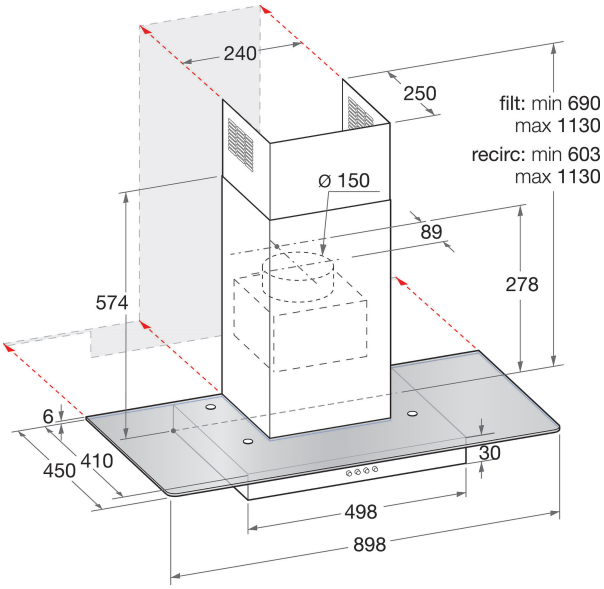

MAIN FEATURES

Product group	Hood
Colour body	Inox
Material body	Stainless steel / glass
Colour chimney	-
Material chimney	-
Typology	Wall-mounted
Installation type	Wall-mounted
Type of control	Mechanical
Type of control settings	-
Decor panel options	-
Motor location	Integrated motor in hood body
Operating Mode	Convertible
Electrical connection rating (W)	215
Current (A)	0,9
Voltage (V)	220-240
Frequency (Hz)	50/60
Length of Electrical Supply Cord (cm)	150
Plug type	No
Chimney height (mm)	-
Height of product, without chimney (mm)	0
Height of the product	1130
Width of the product	900
Depth of the product	447
Minimum niche height	0
Minimum niche width	0
Niche depth	0
Net weight (kg)	17.2

TECHNICAL FEATURES

Type of manual control devices	Buttons
Type of automatic control devices	-
Number of motors	1
Total power of the motors (W)	175
Number of speed settings: boost option availability	3
Boost presence	No
Maximum output air extraction (m^3/h)	559
Boost position air extraction (m^3/h)	0
Maximum output recirculating air (m^3/h)	320
Boost position output recirculating (m^3/h)	0
Light Control Type	On/Off
Number of lights	2
Type of lamps used	Halogen
Total power of the lamps (W)	40
Diameter of air outlet (mm)	150
No-return airflow flap	Yes
Grease filter material	Washable aluminium
Odour filter	Yes

PERFORMANCES

Sound power at min. speed (2010/30/EU)	46
Sound power at max. speed (2010/30/EU)	67
Noise level with boost position (dB(A) re 1 pW)	0