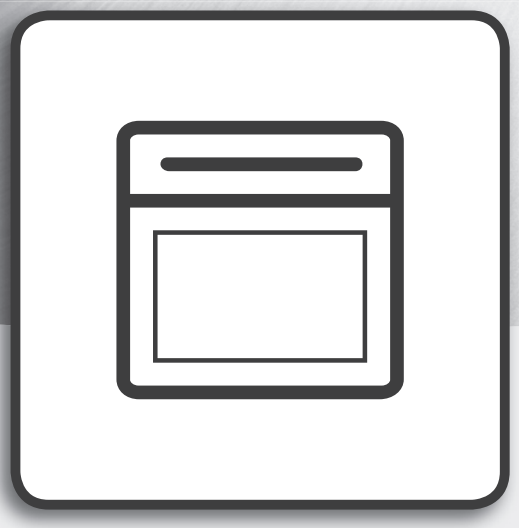

Health & Safety and **Installation** guide

EN *ENGLISH*

Health and Safety guide ***3***
Installation guide ***8***

SAFETY INSTRUCTIONS

IMPORTANT TO BE READ AND OBSERVED

Before using the appliance read these safety instructions.
Keep them nearby for future reference.
These instructions are valid if the country symbol appears on the appliance. If the symbol doesn't appear on the appliance, it is necessary to refer to the technical instructions which will provide the necessary instructions concerning modification of the appliance to the conditions of use of the country.
CAUTION: The use of the gas cooking appliance results in the production of heat, moisture and products of combustion in the room in which it is installed. Ensure that the kitchen is well ventilated especially when the appliance is in use: keep natural ventilation holes open or install a mechanical ventilation device (mechanical extractor hood). Prolonged intensive use of the appliance may call for additional ventilation, for example opening of the window, or more effective ventilation, increasing the level of mechanical ventilation where present.
These instructions and the appliance itself provide important safety warnings, to be observed at all times.
The manufacturer declines any liability for failure to observe these safety instructions, for inapropriate use of the appliance or incorrect setting of controls.
If the information in this manual is not followed exactly, a fire or explosion, may result causing property damage or injury.

SAFETY WARNINGS

Very young (0-3 years) and young children (3-8 years) shall be kept away from the appliance unless continuously supervised.
Children from 8 years old and above and persons with reduced physical, sensory or mental capabilities or lack of experience and knowledge can use this appliance only if they are supervised or have been given instructions on safe use and understand the hazards involved. Children must not play with the appliance. Cleaning and user maintenance must not be carried out by children without supervision.
WARNING: The appliance and its accessible parts become hot during use, children less than 8 year of age shall be kept away unless continuously supervised.
WARNING: Avoid touching heating elements or interior surface - risk of burns.
Never leave the appliance unattended during food drying.
If the appliance is suitable for probe usage, only use the temperature probe recommended for this oven.
Keep clothes or other flammable materials away from the appliance, until all the components have cooled down completely.
Overheated oils and fats catch fire easily. Always be vigilant when cooking food rich in fat, oil or when adding alcohol (e.g. rum, cognac, wine) - risk of fire.
Use oven gloves to remove pans and accessories, taking care not to touch the heating elements.
At the end of cooking, exercise caution when opening the door, by letting the hot air or steam exit gradually before accessing the appliance.
Do not obstruct hot air vents at the front of the oven.

PERMITTED USE

CAUTION: The appliance is not intended to be operated by means of an external timer or separate remote controlled system.
This appliance is solely for domestic, not professional use.
Do not use the appliance outdoors.
Do not store explosive or flammable substances such as aerosol cans and do not place or use gasoline or other flammable materials in or near the appliance: a fire may break out if the appliance is inadvertently switched on.
No other use is permitted (e.g. heating rooms).

INSTALLATION

The appliance must be handled and installed by two or more persons. Use protective gloves to unpack and install the appliance.
The electrical and gas connections must comply with local regulation.
WARNING: Modification of the appliance and its method of installation are essential in order to use the appliance safely and correctly in all the additional countries.
Use pressure regulators suitable for the gas pressure indicated in the instruction.

Connection with rigid pipe (copper or steel).
If the gas pressure is different from the recommended pressure, a suitable pressure regulator must be fitted to the inlet pipe in accordance with the current National Regulations
The room must be equipped with an air extraction system that expels any combustion fumes. This may consist of a hood or an electric fan that automatically starts each time the appliance is switched on.
The room must also allow proper air circulation, as air is needed for combustion to occur normally. The flow of air must not be less than 2 m^3/h per kW of installed power.

The air circulation system may take air directly from the outside by means of a pipe with an inner cross section of at least 100 cm^2; the opening must not be vulnerable to any type of blockages.
The system can also provide the air needed for combustion indirectly, i.e. from adjacent rooms fitted with air circulation tubes as described above. However, these rooms must not be communal rooms, bedrooms or rooms that may present a fire hazard.
Liquid petroleum gas sinks to the floor as it is heavier than air. Therefore, rooms containing LPG cylinders must also be equipped with vents to allow gas to escape in the event of a leak. As a result LPG cylinders, whether partially or completely full, must not be installed or stored in rooms or storage areas that are below ground level (cellars, etc.). It is advisable to keep only the cylinder being used in the room, positioned so that it is not subject to heat produced by external sources (ovens, fireplaces, stoves, etc.) which could raise the temperature of the cylinder above 50°C.
Use an appropriate cabinet to ensure that the appliance operates properly: to install the oven under the counter (see diagram) or in a kitchen unit, the cabinet must have the dimensions as the picture.
To ensure adequate ventilation, the back panel of the cabinet must be removed. It is advisable to install the oven so that it rests on two strips of wood, or on a completely flat surface with an opening of at least 45 x 560 mm as the picure.

GAS CONNECTION

WARNING: Prior to installation, ensure that the local distribution conditions (nature of gas and gas pressure) and the adjustment of the appliance are compatible.
Check that the pressure of the gas supply is consistent with the values indicated in Table 1 ("Burner and nozzle specifications").
WARNING: The adjustment condictions for this appliance are stated on the lable (or data plate).
WARNING: This appliance is not connected to a combustion products evacuation device. It shall be installed and connected in accordance with current installation regulations.
Particulat attention shall be given to the relevant requirements regarding ventilation.
If the appliances is connected to liquid gas, the regulation screw must be fastned as tightly as possible.
IMPORTANT: When gas cylinder is adopted, the gas cylinder or gas container must be properly settled (vertical orientation).
WARNING: This operation must be perfomed by a qualified technician.
Use only flexible or rigid metal hose for gas connection.

Connection with a rigid pipe (copper or steel)

Connection to the gas system must be carried out in such a way as not to place any strain of any kind on the appliance.
There is an adjustable L-shaped pipe fitting on the appliance supply ramp and this is fitted with a seal in order to prevent leaks. The seal must always be replaced after rotating the pipe fitting (the seal is provided with the appliance).
The gas supply pipe fitting is a threaded 1/2 gas cylindrical male attachment.

Connecting a flexible jointless stainless steel pipe to a threaded attachment

The gas supply pipe fitting is a threaded 1/2 gas cylindrical male attachment. These pipes must be installed so that they are never longer than 2000 mm when fully extended. Once connection has been carried out, make sure that the flexible metal pipe does not touch any moving parts and is not compressed.
Only use pipes and seals that comply with current National regulations.
IMPORTANT: If a staineless steel hose is used, it must be installed so as not touch any mobile part of the furniture (e.g.drawer). It must pass thorugh an area where there are no obstructions and where it is possible to inspect it on all its length.
The appliance should be connected to the main gas supply or to gas cylinder in compliance with the current National regulations. Before carry out the connection, make sure that the appliance is compatible with the gas supply you wish to use. If this is not the case, follow the instructions indicated in the paragraph "Adapting to different types of gas".
After connection to the gas supply, check for leaks with soapy water. Light up the burners and turn the knobs from max position 1* to minimum position 2* to check flame stability.

ADAPTING TO DIFFERENT TYPES OF GAS

Adapting to different types of gas in order to adapt the oven to a type of gas other than the type for which it was manufactured (indicated on the label), follow these simple steps:
Replacing the oven burner nozzle
1. Open the oven door fully.
2. Slide out the bottom of the oven.

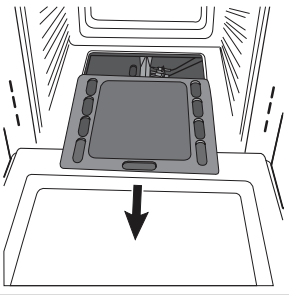

3. Unscrew the burner fastening screws.
4. Remove screw “V” and then the oven burner.

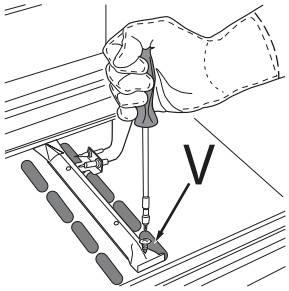

5. Unscrew the oven burner nozzle using the special socket spanner for the nozzles, or better still a 7 mm socket spanner, and replace it with a nozzle suited to the new type of gas (see Table 1).

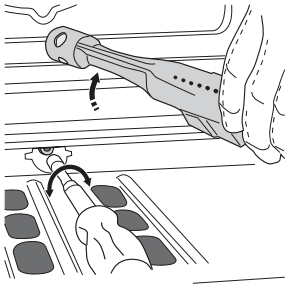

6. Replace all the parts, following the steps described above in the reverse order.
Take care to replace also the bottomof the oven in its original position.
Installation and repairs must be carried out by a qualified technician, in compliance with the manufacturer’s instructions and local safety regulations. Do not repair or replace any part of the appliance unless specifically stated in the user manual.
Children should not perform installation operations. Keep children away during installation. Keep the packaging materials (plastic bags, polystyrene parts, etc.) out of reach of children, during and after the installation.
After unpacking the appliance, make sure that it has not been damaged during transport. In the event of problems, contact the dealer or your nearest After-sales Service.
The appliance must be disconnected from the power supply before any installation operation.
During installation, make sure the appliance does not damage the power cable.
Only activate the appliance when the installation has been completed.
After installation, the bottom of the appliance must no longer be accessible.
Carry out all cabinet cutting works before fitting the appliance in the furniture and carefully remove all wood chips and sawdust.
Do not obstruct the minimum gap between the worktop and the upper edge of the oven.
Only remove the oven from its polystyrene foam base at the time of installation.
Do not install the appliance behind a decorative door - Risk of fire.

ELECTRICAL WARNINGS

For installation to comply with current safety regulations, an omnipolar switch with minimum contact gap of 3 mm is required and the appliance must be earthed.
If the power cable is damaged, replace with an identical one.
The power cable must only be replaced by a qualified technician in compliance with the manufacturer instruction and current safety regulations.
Contact an authorized service center.
It must be possible to disconnect the appliance from the power supply by unplugging it if plug is accessible, or by means of an accessible multi-pole switch installed upstream of the socket in conformity with national electrical safety standards.
The rating plate is on the front edge of the oven (visible when the door is open).
In case of replacement of power cable, contact an authorized service center.
IMPORTANT: The data rilevant to the voltage an power absortions are indicated on the rating plate
If the fitted plug is not suitable for your socket outlet, contact a qualified technician.
The power cable must be long enough to connect the appliance, once fitted in its housing, to the main power supply. Do not pull the power supply cable.
Do not use extension leads, multiple sockets or adapters.
Do not operate this appliance if it has a damaged mains cord or plug, if it is not working properly, or if it has been damaged or dropped. Keep the cord away from hot surfaces.
The electrical components must not be accessible to the user after installation.
Do not touch the appliance with any wet part of the body and do not operate it when barefoot.
The power cable must be long enough to connect the appliance, once fitted in its housing, to the main power supply. Do not pull the power supply cable.
The earthing of this appliance is compulsory by law.
The cable must be checked regularly and replaced by authorised tschnicians in compliance with the manufacturer instruction and current safety regulations.

CORRECT USE

Should you experience difficulty in turning the burners knobs, please contact After Sales Service for replacement of the burner tap if found to be faulty.
The openings use for the ventilation and dispersion of heat must never be covered.
When you place the rack inside, make sure that the stop is directed upwards and in the back of the cavity.

CLEANING AND MAINTENANCE

Never use steam cleaning

equipment or pressure cleaners on the appliance.
WARNING: Ensure that the appliance is switched off before replacing the lamp to avoid the possibility of electric shock.
Do not use harsh abrasive cleaners or sharp metal scrapers to clean the appliance door glass since they can scratch the surface, which may result in shattering of the glass.
Wear protective gloves for cleaning and maintenance.
The appliance must be disconnected from the power supply before any maintenance operation.
Ensure the appliance is cooled down before carrying out any cleaning or maintenance operation.
To avoid damaging the electric ignition device, do not use it when the burners are not in their housing.
Never use steam cleaning equipment or pressure cleaners on the appliance.
Wear protective gloves for cleaning and maintenance.

TABLE 1 - Burner and nozzle specifications			**Liquid gas**				**Natural gas**	
Burner	Thermal Power kW (gross heat value)*		By-pass	Nozzle	Flow*		Nozzle	Flow*
			1/100	1/100	g/h		1/100	l/h
	Nominal	Reduced	(mm)		***	**	(mm)	
Oven	2,60	1,00	46	75	189	186	119	248
Supply Pressures	Nominal (mbar)				28-30	37	20	
	Minimum (mbar)				20	25	17	
	Maximum (mbar)				35	45	25	
*	At 15°C and 1013,25 mbar-dry gas							
**	Propane P.C.S. = 50.37 MJ/Kg							
***	Butane P.C.S. = 49.47 MJ/Kg							
	Natural P.C.S. = 37.78 MJ/m3							
	City P.C.S. = 15.87 MJ/m3							

TABLE 2 - Gas Part	
Category	Nominal Power kW
II2H3+	**2,60** (189 g/h - G30) (186 g/h - G31)

SAFEGUARDING THE ENVIRONMENT

DISPOSAL OF PACKAGING MATERIALS

The packaging material is 100% recyclable and is marked with the recycle symbol ♻. The various parts of the packaging must therefore be disposed of responsibility and in full compliance with local authority regulations governing waste disposal.

SCRAPPING OF HOUSEHOLD APPLIANCES

When scrapping the appliance, make it unusable by cutting off the power cable and removing the doors and shelves (if present) so that children cannot easily climb inside and become trapped.
This appliance is manufactured with recyclable ♻ or reusable materials. Dispose of it in accordance with local waste disposal regulations.

For further information on the treatment, recovery and recycling of household electrical appliances, contact your competent local authority, the collection service for household waste or the store where you purchase the appliance.
This appliance is marked in compliance with European Directive 2012/19/EU, Waste Electrical and Electronic Equipment (WEEE).
By ensuring this product is disposed of correctly, you will help prevent potential negative consequences for the environment and human health, which could otherwise be caused by inappropriate waste handling of this product.
The symbol  on the product or on the accompanying documentation indicates that it should not be treated as domestic waste but must be taken to an appropriate collection center for the recycling of electrical and electronic equipment.

ENERGY SAVING TIPS

Only preheat the oven if specified in the cooking table or your recipe.
Use dark lacquered or enamelled baking moduls as they absorb heat far better.

DECLARATION OF CONFORMITY

This appliance has been designed, constructed and distributed in compliance with the requirements of European Directives:
GAS 2009/142/EC.

This appliance, which is intended to come into contact with foodstuffs, complies with European Regulation CE n. 1935/2004.

This appliance meets the Eco Design requirements of European Regulations n. 65/2014, and n. 66/2014 in conformity to the European standard EN 60350-1.

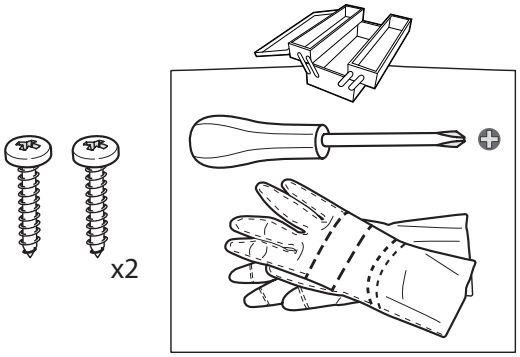
x2

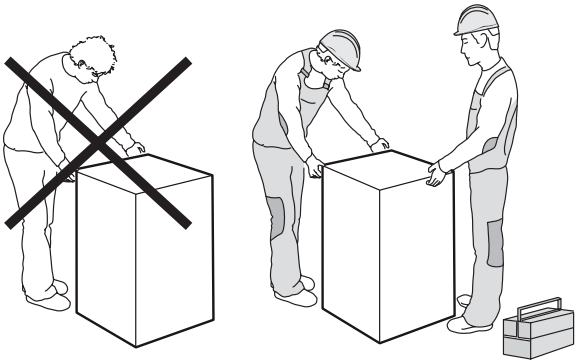

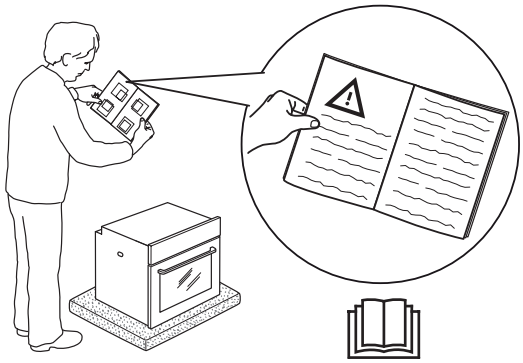

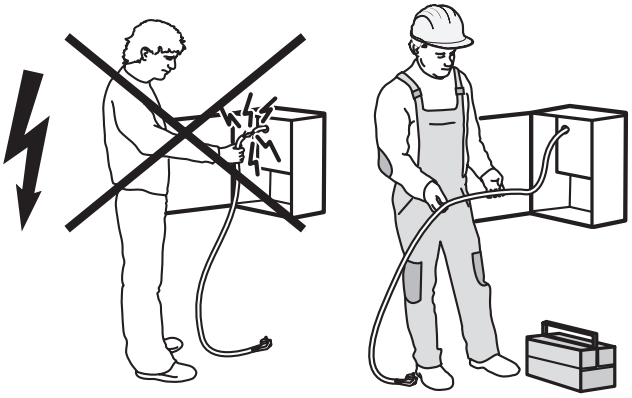

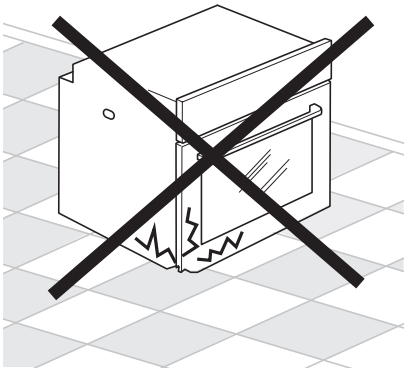

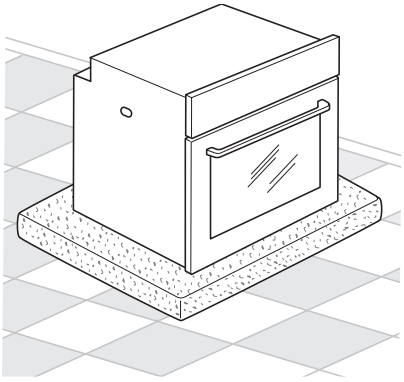

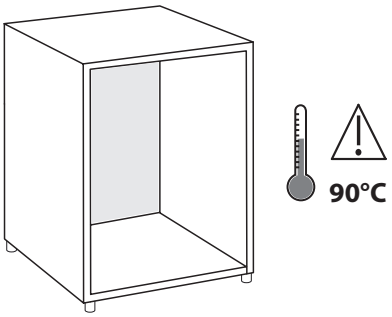
90°C

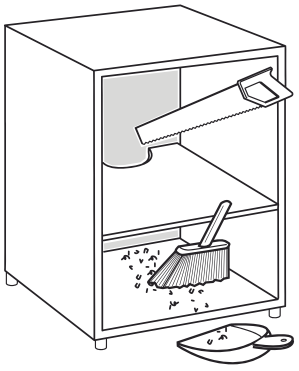

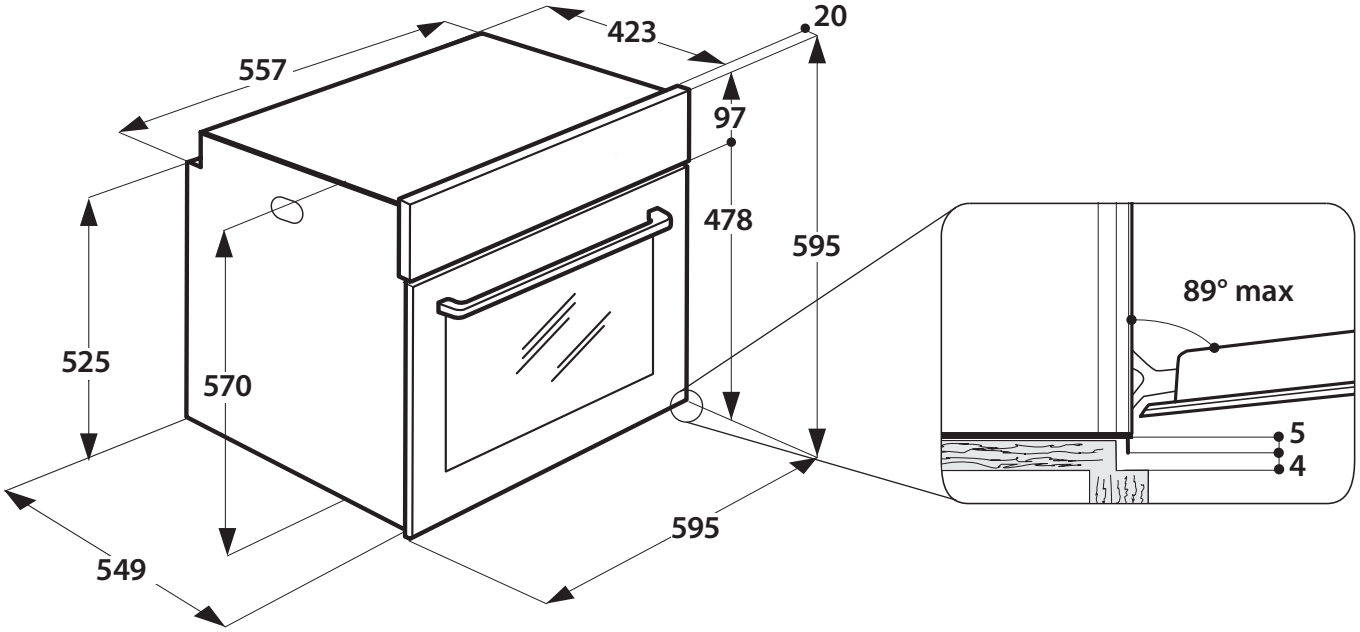
423
20
557
97
478
595
525
570
89° max
5
4
595
549

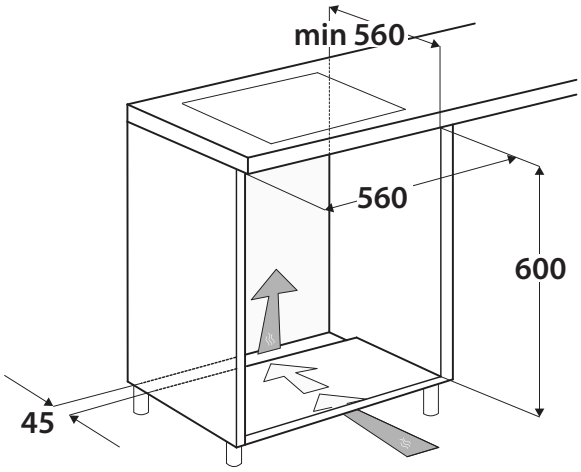
min 560
560
600
45

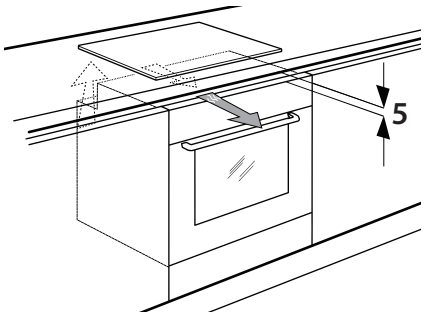
5

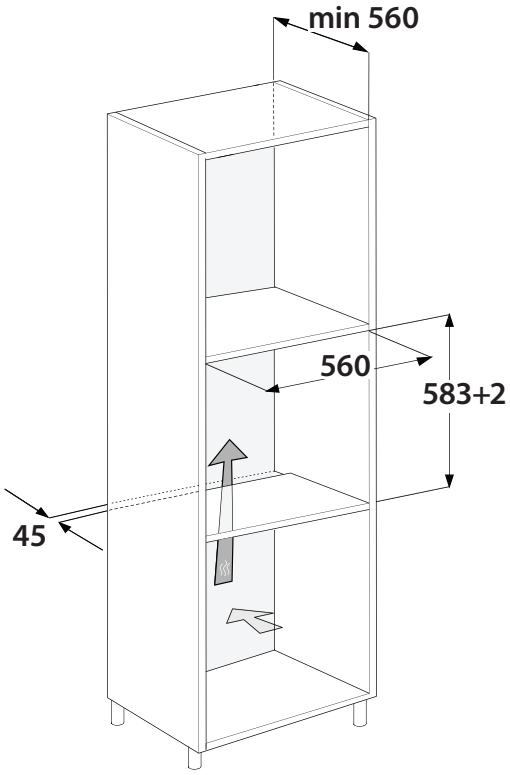
min 560
560
583+2
45

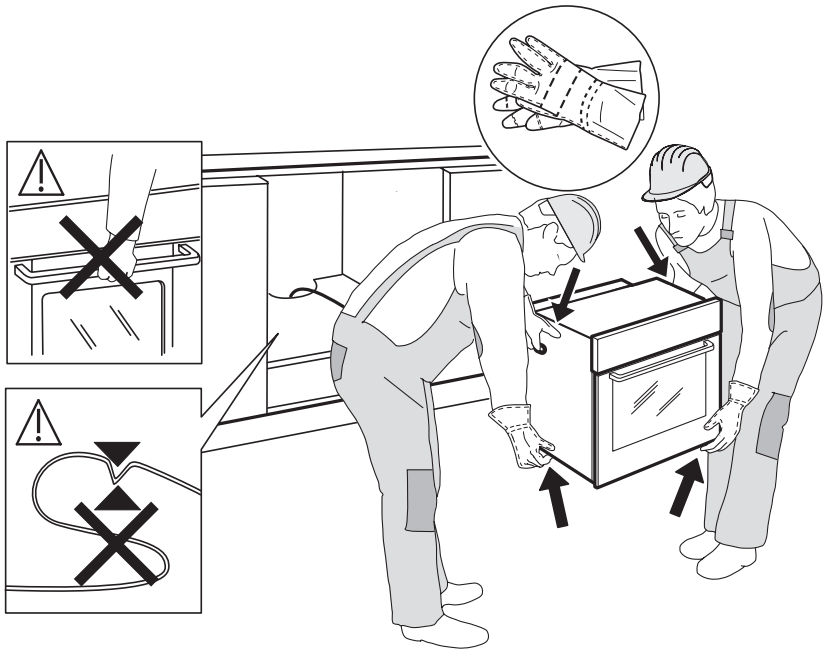

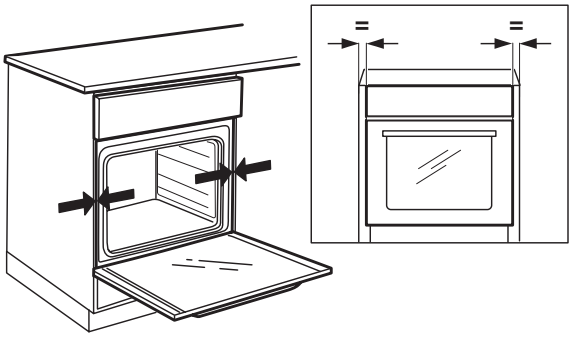

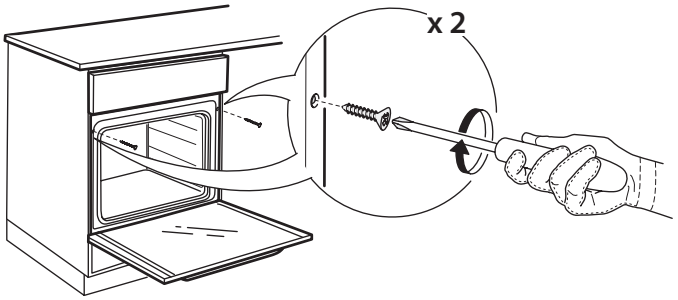

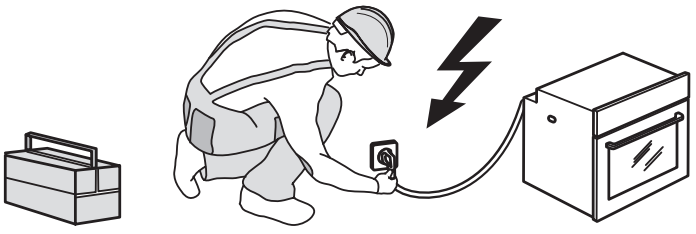

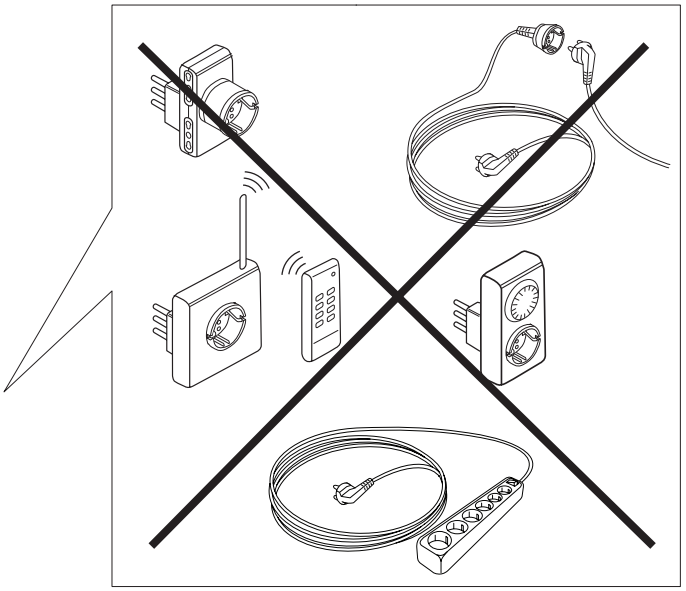

Whirlpool EMEA S.p.A.
Via Carlo Pisacane n. 1
20016 Pero (Mi), Italia

400011050980
Printed in Italy