SZ 12 AA1 D/HA

12NC: F102476

GTIN (EAN) code: 8007842024760



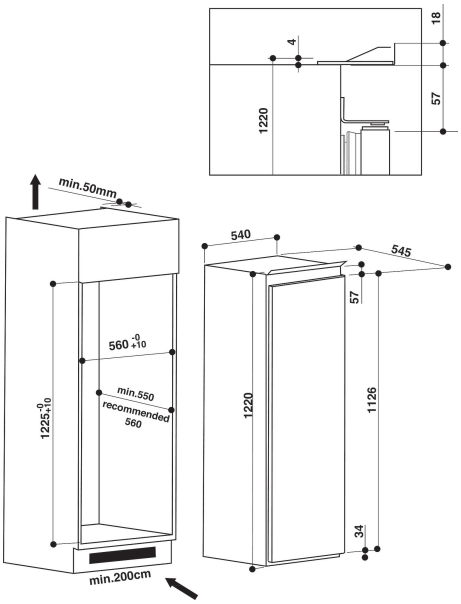

MAIN FEATURES

Product group	Refrigerator
Commercial code	SZ 12 AA1 D/HA
GTIN (EAN) code	8007842024760
Construction type	Built-in
Installation type	Half-integrated
Type of control	Electronic
Type of control settings	LED
Main colour of product	Inox
Electrical connection rating (W)	80
Current (A)	16
Voltage (V)	220-240
Frequency (Hz)	50
Length of Electrical Supply Cord (cm)	245
Plug type	Schuko
Total unit net capacity (l)	191
Star Rating	4
Number of independent cooling systems	1
Height of the product	1220
Width of the product	540
Depth of the product	545
Depth with open door 90 degree (mm)	-
Maximum adjustability feet	0
Net weight (kg)	38
Door hinge	Right reversible

TECHNICAL FEATURES

Temperature adjustable	Yes
Warning signal / Malfunction	Visual
Defrost process fridge section	Automatic
Fast cooling possibility	No
Interior ventilator fridge section	No
Shelves for Bottles	No
Lockable door	-
Number of shelves in fridge compartment	4
Number of Adjustable Shelves in fridge compartment	3
Material of the shelves	Glass
Thermometer fridge section	None

PERFORMANCES

Energy efficiency class - NEW (2010/30/EU)	A++
Energy consumption annual (kWh/annum) - NEW (2010/30/EU)	177
Refrigerator Net capacity (l) - NEW (2010/30/EU)	173
Freezer Net capacity (l) - NEW (2010/30/EU)	18
Freezing capacity (kg/24h) - NEW (2010/30/EU)	2
Temperature rise time (h)	12
Climate class	SN-T
Noise level (dB(A) re 1 pW)	36
Frost free system	No
Maximum ambient temperature	38
Minimum ambient temperature	10