PCN 642 /HA(BK)

12NC: F100547

GTIN (EAN) code: 8050147005477



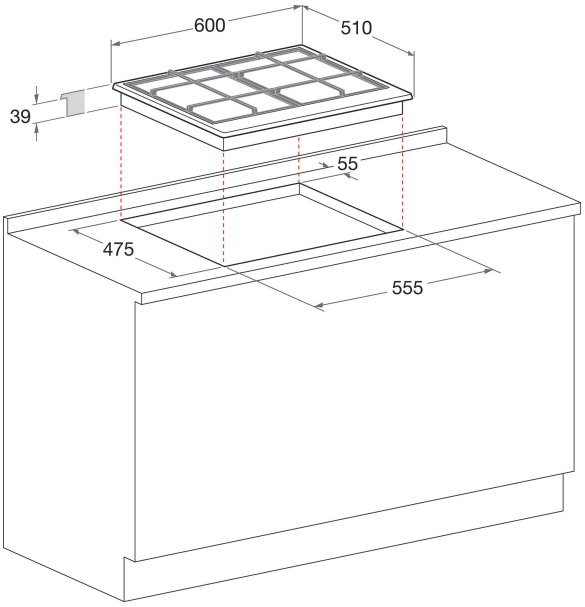

MAIN FEATURES

Product group	Hob
Construction type	Built-in
Type of control	Mechanical
Type of control settings	Knob
Number of gas burners	4
Number of electric cooking zones	0
Number of electric plates	0
Number of radiant plates	0
Number of halogen plates	0
Number of induction plates	0
Number of electric warming zones	0
Location of control panel	Front
Basic surface material	Sheetmetal
Main colour of product	Black
Electrical connection rating (W)	0
Gas connection rating (W)	7300
Current (A)	-
Voltage (V)	220-240
Frequency (Hz)	50/60
Length of Electrical Supply Cord (cm)	100
Plug type	No
Gas connection	N/A
Width of the product	600
Height of the product	39
Depth of the product	510
Minimum niche height	0
Minimum niche width	555
Niche depth	475
Net weight (kg)	9.5
Automatic programmes	No

TECHNICAL FEATURES

Power on indicator	No
Number of indicators	0
Type of regulation	Semi-fast
Type of lid	Without
Residual heat indicator	Without
Main on/off switch	No
Safety device	No
Timer	No

PERFORMANCES

Energy input	Gas