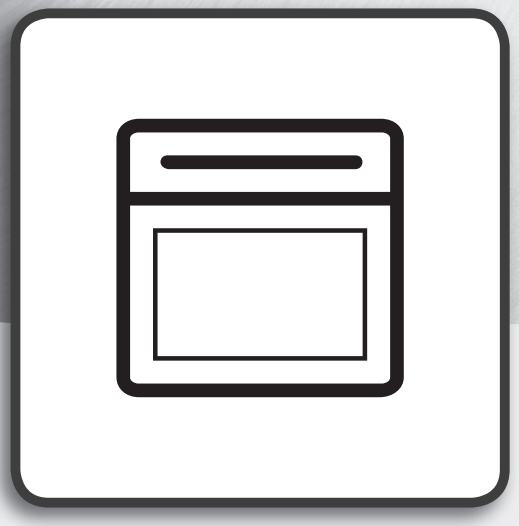

Health & Safety and **Installation** guide

EN *ENGLISH*

Health and Safety guide ***3***
Installation guide ***5***

SAFETY INSTRUCTIONS

IMPORTANT TO BE READ AND OBSERVED

Before using the appliance carefully read these safety instructions.
Keep them close at hand for future reference.
These instructions and the appliance itself provide important safety warnings, to be observed at all times.
The manufacturer declines any liability for failure to observe these safety instructions, for inapropriate use of the appliance or incorrect setting of controls.

SAFETY WARNINGS

Very young (0-3 years) and young children (3-8 years) shall be kept away from the appliance unless continuously supervised.
Children from 8 years old and above and persons with reduced physical, sensory or mental capabilities or lack of experience and knowledge can use this appliance only if they are supervised or have been given instructions on safe use and understand the hazards involved. Children must not play with the appliance.
Cleaning and user maintenance must not be carried out by children without supervision.
WARNING: The appliance and its accessible parts become hot during use, children less than 8 year of age shall be kept away unless continuously supervised.
WARNING: Avoid touching heating elements or interior surface - risk of burns.
Never leave the appliance unattended during food drying.
If the appliance is suitable for probe usage, only use the temperature probe recommended for this oven.
Keep clothes or other flammable materials away from the appliance, until all the components have cooled down completely.
Overheated oils and fats catch fire easily. Always be vigilant when cooking food rich in fat, oil or when adding alcohol (e.g. rum, cognac, wine) - risk of fire.
Use oven gloves to remove pans and accessories, taking care not to touch the heating elements.
At the end of cooking, exercise caution when opening the door, by letting the hot air or steam exit gradually before accessing the appliance.
Do not obstruct hot air vents at the front of the oven.

PERMITTED USE

CAUTION: The appliance is not intended to be operated by means of an external timer or separate remote controlled system.
This appliance is solely for domestic, not professional use.
Do not use the appliance outdoors.
Do not store explosive or flammable substances such as aerosol cans and do not place or use gasoline or other flammable materials in or near the appliance: a fire may break out if the appliance is inadvertently switched on.
No other use is permitted (e.g. heating rooms).

INSTALLATION

The appliance must be handled and installed by two or more persons. Use protective gloves to unpack and install the appliance.
Installation and repairs must be carried out by a qualified technician, in compliance with the manufacturer's instructions and local safety regulations. Do not repair or replace any part of the appliance unless specifically stated in the user manual.
Children should not perform installation operations.
Keep children away during installation. Keep the packaging materials (plastic bags, polystyrene parts, etc.) out of reach of children, during and after the installation.
After unpacking the appliance, make sure that it has not been damaged during transport. In the event of problems, contact the dealer or your nearest After-sales Service.
The appliance must be disconnected from the power supply before any installation operation.
During installation, make sure the appliance does not damage the power cable.
Only activate the appliance when the installation has been completed.
After installation, the bottom of the appliance must no longer be accessible.
Carry out all cabinet cutting works before fitting the appliance in the furniture and carefully remove all wood chips and sawdust.
Do not obstruct the minimum gap between the worktop and the upper edge of the oven.
Only remove the oven from its polystyrene foam base at the time of installation.

ELECTRICAL WARNINGS

For installation to comply with current safety regulations, an omnipolar switch with minimum contact gap of 3 mm is required and the appliance must be earthed.
If the power cable is damaged, replace with an identical one.
The power cable must only be replaced by a qualified technician in compliance with the manufacturer instruction and current safety regulations.
Contact an authorized service center.
It must be possible to disconnect the appliance

from the power supply by unplugging it if plug is accessible, or by means of an accessible multi-pole switch installed upstream of the socket in conformity with national electrical safety standards.
The rating plate is on the front edge of the oven (visible when the door is open).
In case of replacement of power cable, use only following type(s): H05 RR-F 3 x 1.5 mm^2.
If the fitted plug is not suitable for your socket outlet, contact a qualified technician.
The power cable must be long enough to connect the appliance, once fitted in its housing, to the main power supply. Do not pull the power supply cable.
Do not use extension leads, multiple sockets or adapters.
Do not operate this appliance if it has a damaged mains cord or plug, if it is not working properly, or if it has been damaged or dropped. Keep the cord away from hot surfaces.
The electrical components must not be accessible to the user after installation.
Do not touch the appliance with any wet part of the body and do not operate it when barefoot.

CLEANING AND MAINTENANCE

Never use steam cleaning equipment.
WARNING: Ensure that the appliance is switched off before replacing the lamp to avoid the possibility of electric shock.
Do not use harsh abrasive cleaners or sharp metal scrapers to clean the appliance door glass since they can scratch the surface, which may result in shattering of the glass.
Wear protective gloves for cleaning and maintenance.
The appliance must be disconnected from the power supply before any maintenance operation.
Ensure the appliance is cooled down before carrying out any cleaning or maintenance operation.

SAFEGUARDING THE ENVIRONMENT

DISPOSAL OF PACKAGING MATERIALS

The packaging material is 100% recyclable and is marked with the recycle symbol ♻. The various parts of the packaging must therefore be disposed of responsibility and in full compliance with local authority regulations governing waste disposal.

SCRAPPING OF HOUSEHOLD APPLIANCES

When scrapping the appliance, make it unusable by cutting off the power cable and removing the doors and shelves (if present) so that children cannot easily climb inside and become trapped.
This appliance is manufactured with recyclable ♻ or reusable materials.
Dispose of it in accordance with local waste disposal regulations.
For further information on the treatment, recovery and recycling of household electrical appliances, contact your competent local authority, the collection service for household waste or the store where you purchase the appliance.
This appliance is marked in compliance with European Directive 2012/19/EU, Waste Electrical and Electronic Equipment (WEEE).
By ensuring this product is disposed of correctly, you will help prevent potential negative consequences for the environment and human health, which could otherwise be caused by inappropriate waste handling of this product.
The symbol  on the product or on the accompanying documentation indicates that it should not be treated as domestic waste but must be taken to an appropriate collection center for the recycling of electrical and electronic equipment.

ENERGY SAVING TIPS

Only preheat the oven if specified in the cooking table or your recipe.
Use dark lacquered or enamelled baking moduls as they absorb heat far better.
Switch the oven off 10/15 minutes before the set cooking time. Food requiring prolonged cooking will continue to cook even once the oven is switched off.

DECLARATION OF CONFORMITY

This appliance has been designed, constructed and distributed in compliance with the requirements of European Directives:
LVD 2014/35/EU, EMC 2014/30/EU and RoHS 2011/65/EU.
This appliance, which is intended to come into contact with foodstuffs, complies with European Regulation CE n. 1935/2004.
This appliance meets the Eco Design requirements of European Regulations n. 65/2014, and n. 66/2014 in conformity to the European standard EN 60350-1.

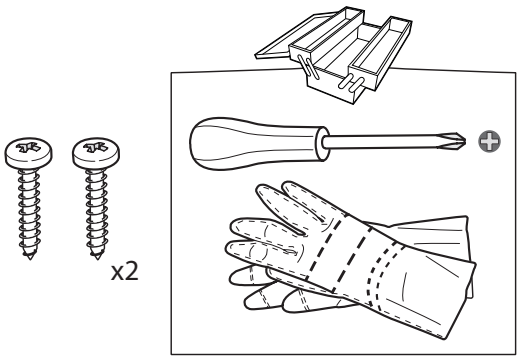
x2

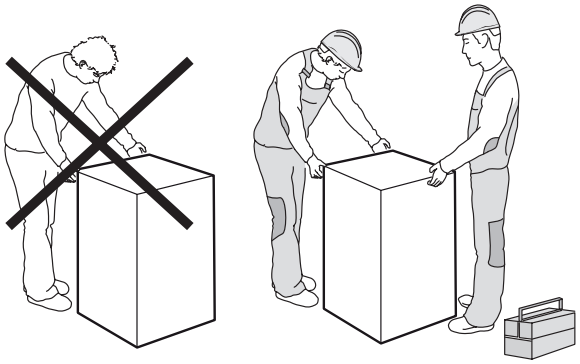

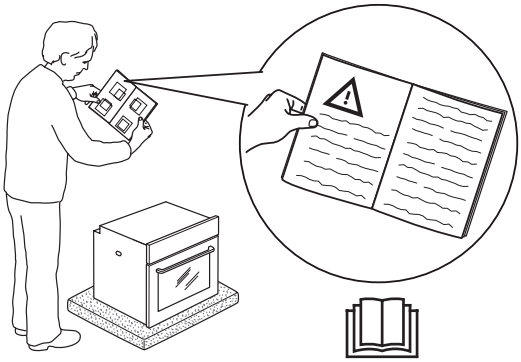

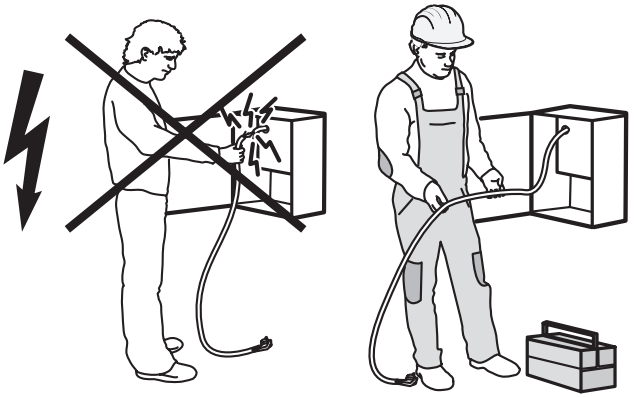

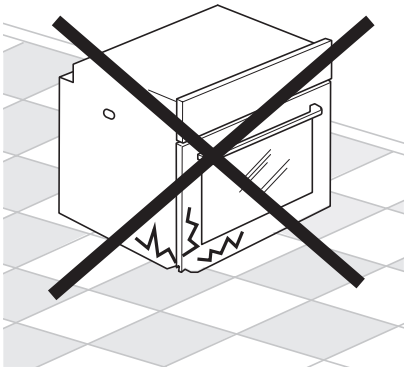

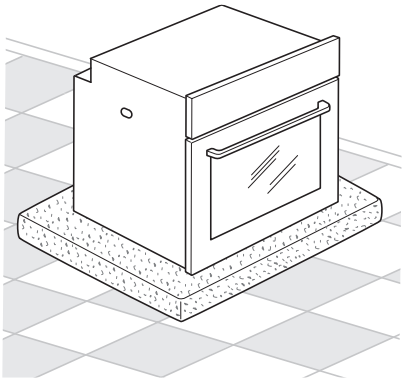

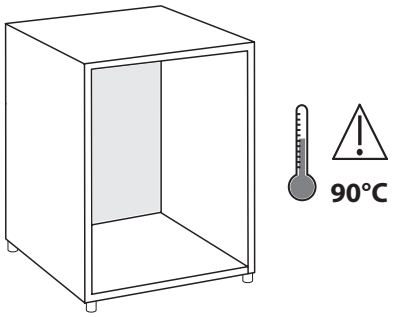
90°C

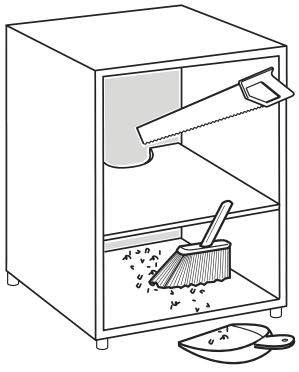

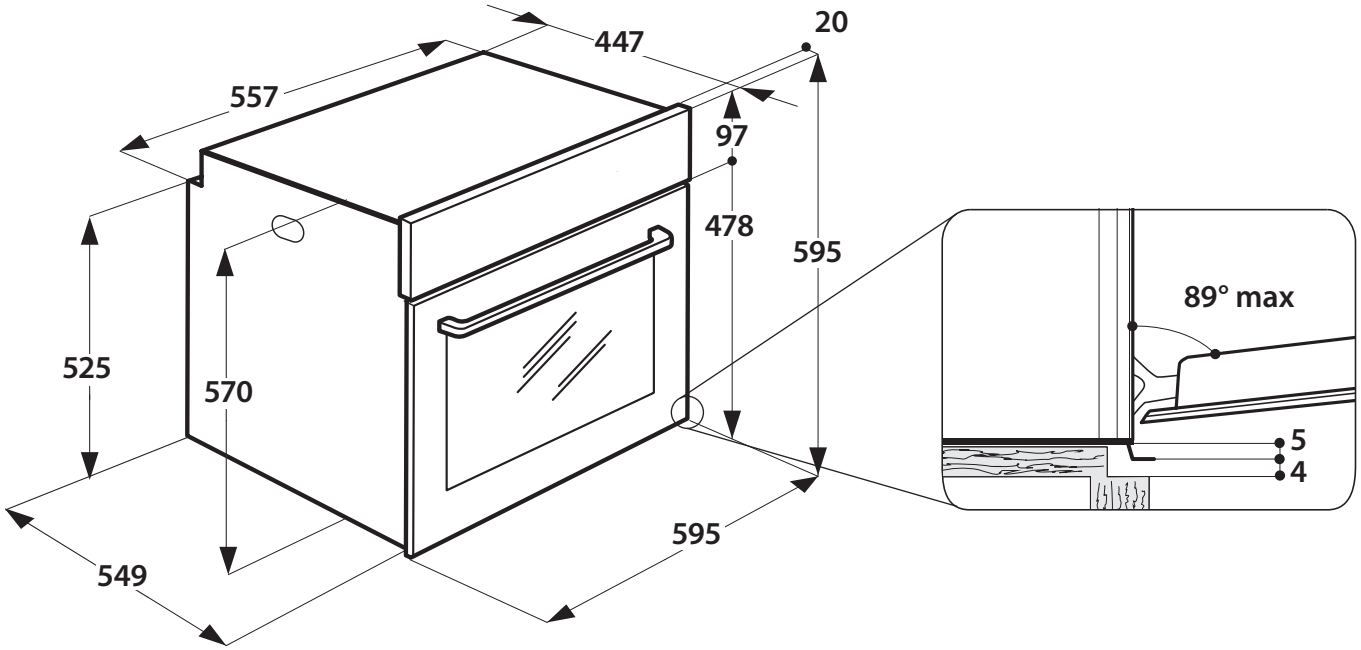
447
20
557
97
478
595
525
570
89° max
5
4
595
549

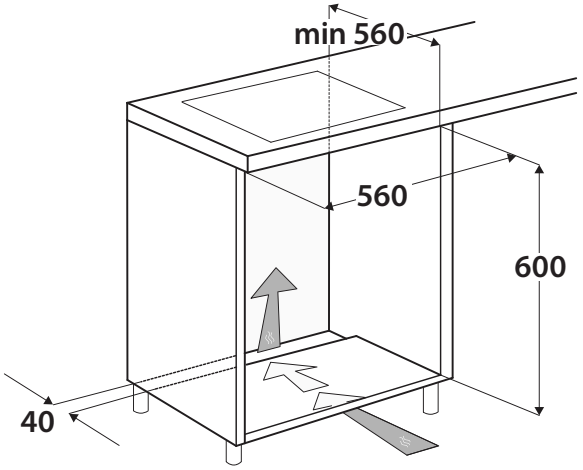
min 560
560
600
40

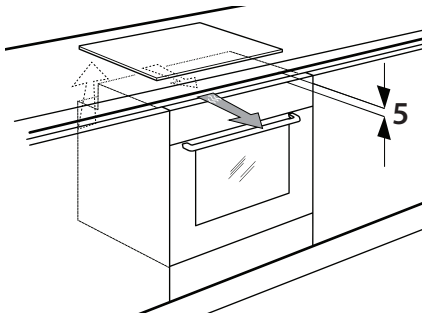
5

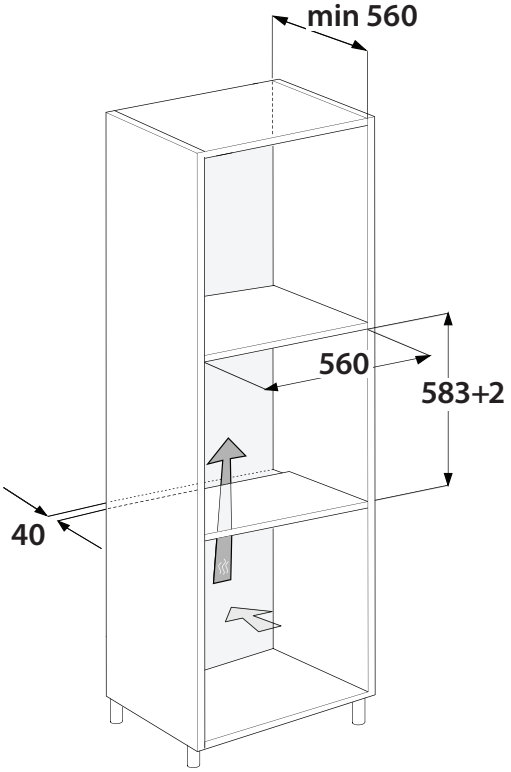
min 560
560
583+2
40

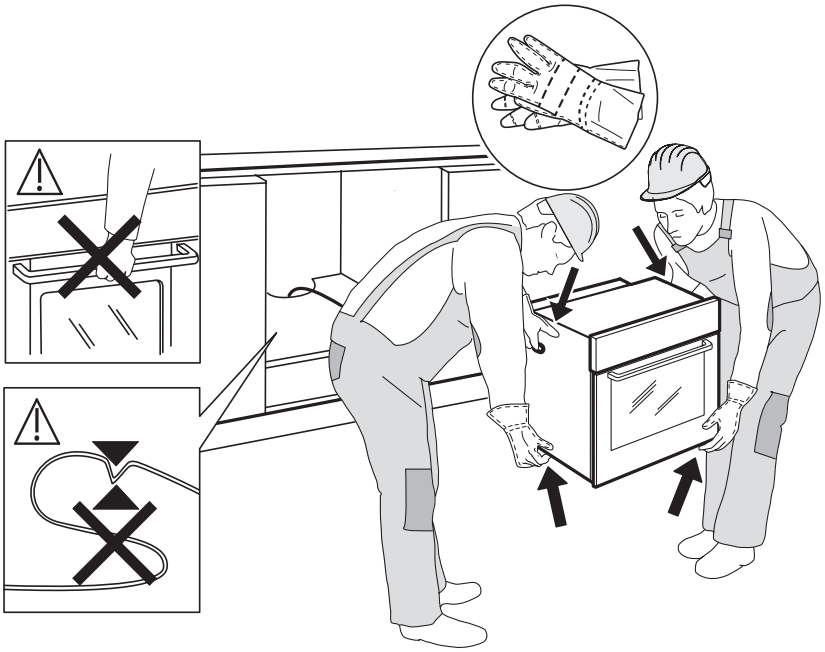

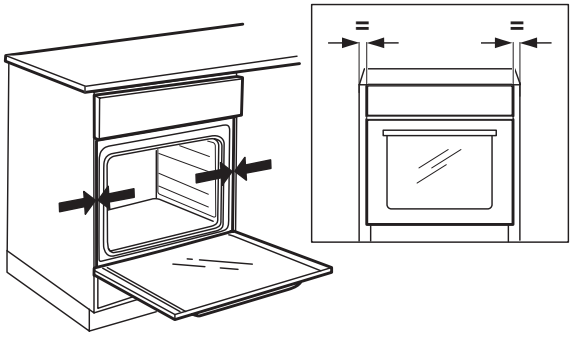

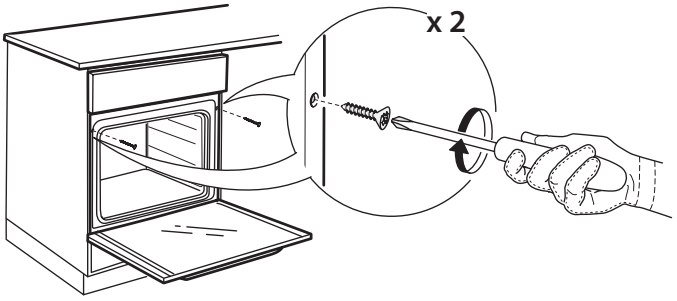

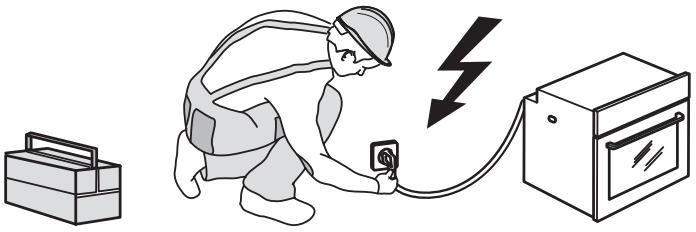

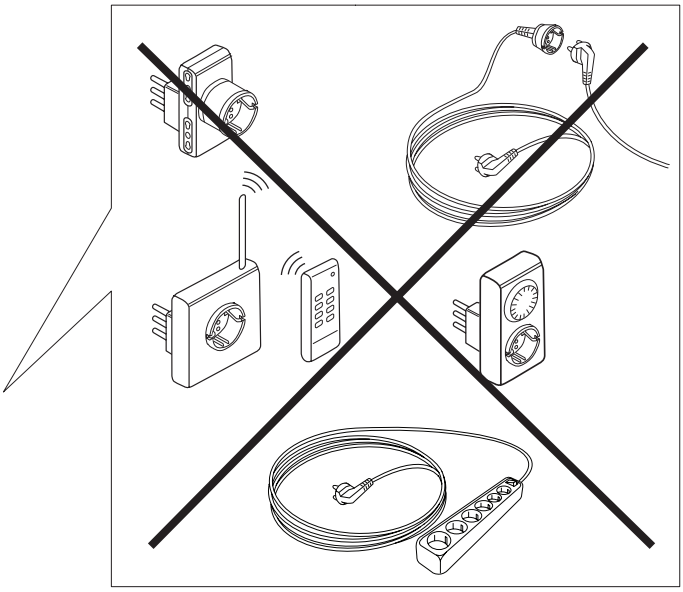

400010864389

Printed in Italy