# KIS 641 F B

12NC: F093265

GTIN (EAN) code: 8007842932669

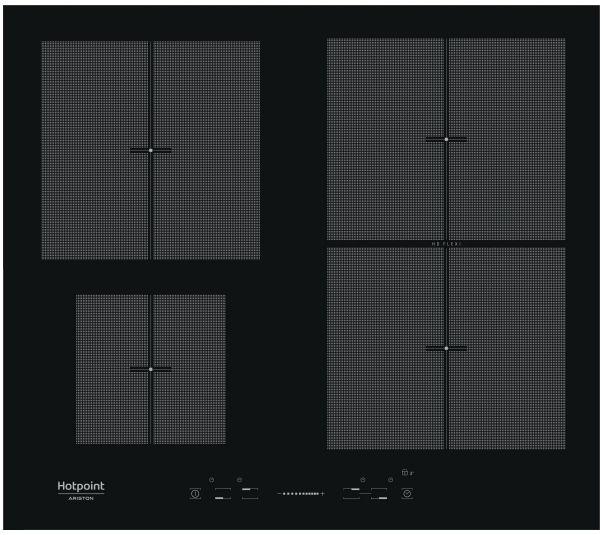


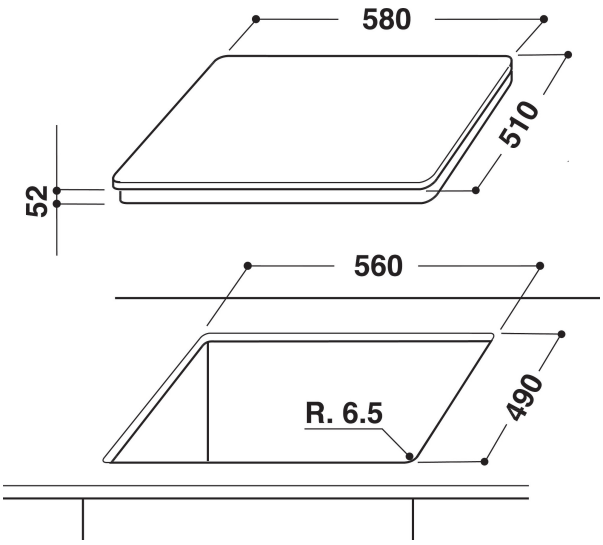


## MAIN FEATURES

| | |
|---|---|
| Product group | Hob |
| Construction type | Built-in |
| Type of control | Electronic |
| Type of control settings | - |
| Number of gas burners | 0 |
| Number of electric cooking zones | 4 |
| Number of electric plates | 0 |
| Number of radiant plates | 0 |
| Number of halogen plates | 0 |
| Number of induction plates | 4 |
| Number of electric warming zones | 0 |
| Location of control panel | Front |
| Basic surface material | Glass |
| Main colour of product | Black |
| Electrical connection rating (W) | 7200 |
| Gas connection rating (W) | 0 |
| Current (A) | 31,3 |
| Voltage (V) | 230 |
| Frequency (Hz) | 50/60 |
| Length of Electrical Supply Cord (cm) | 150 |
| Plug type | No |
| Gas connection | N/A |
| Width of the product | 580 |
| Height of the product | 56 |
| Depth of the product | 510 |
| Minimum niche height | 30 |
| Minimum niche width | 560 |
| Niche depth | 490 |
| Net weight (kg) | 12.5 |
| Automatic programmes | No |

## TECHNICAL FEATURES

| | |
|---|---|
| Power on indicator | Yes |
| Number of indicators | 3 |
| Type of regulation | Inductor |
| Type of lid | Without |
| Residual heat indicator | Separate |
| Main on/off switch | Yes |
| Safety device | - |
| Timer | Yes |

## PERFORMANCES

| | |
|---|---|
| Energy input | Electric |