KIA 641 B B (WH)

12NC: F093295

GTIN (EAN) code: 8007842932959



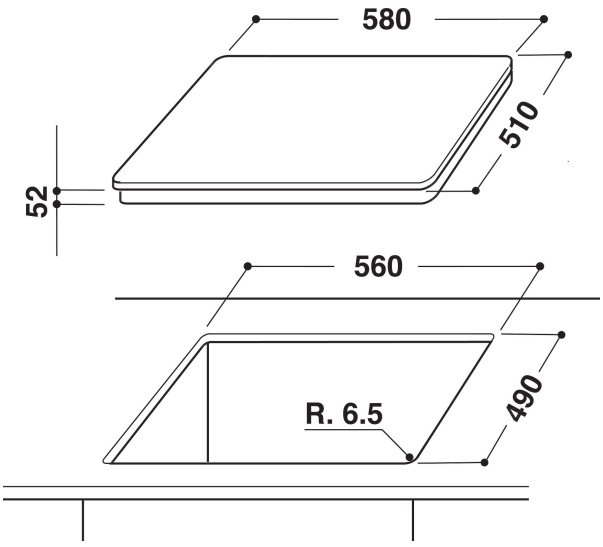

MAIN FEATURES

Product group	Hob
Construction type	Built-in
Type of control	Electronic
Type of control settings	Touch-control
Number of gas burners	-
Number of electric cooking zones	4
Number of electric plates	-
Number of radiant plates	-
Number of halogen plates	-
Number of induction plates	4
Number of electric warming zones	-
Location of control panel	Front
Basic surface material	Ceramic Glass
Main colour of product	Black
Electrical connection rating (W)	7200
Gas connection rating (W)	-
Current (A)	13
Voltage (V)	220-230
Frequency (Hz)	50
Length of Electrical Supply Cord (cm)	100
Plug type	No
Gas connection	N/A
Width of the product	590
Height of the product	51
Depth of the product	520
Minimum niche height	-
Minimum niche width	560
Niche depth	490
Net weight (kg)	8.8
Automatic programmes	No

TECHNICAL FEATURES

Power on indicator	Yes
Number of indicators	-
Type of regulation	-
Type of lid	Without
Residual heat indicator	Without
Main on/off switch	Yes
Safety device	No
Timer	No

PERFORMANCES

Energy input	Electric