PHILIPS

Portable speaker

BT6700

User manual



Register your product and get support at

www.philips.com/support

Contents

1 Important 1
Safety 1
Notice 1

2 Your Bluetooth speaker 3
Introduction 3
What's in the box 3
Overview of the speaker 4

3 Get started 5
Charge the built-in battery 5
Turn on/off 5

4 Use Bluetooth devices 6
Connect a Bluetooth device 6
Connect two Bluetooth devices simultaneously 6
Play from Bluetooth device 7
Disconnect a device 7
Reconnect a device 7
Clear pairing information 7
Control your phone call 7

5 Other features 8
Listen to an external device 8
Adjust volume 8

6 Specifications 9

7 Troubleshooting 10
General 10
About Bluetooth device 10

1 Important

Safety

Warning

- Never remove the casing of this speaker.
- Never place this speaker on other electrical equipment.
- Keep this speaker away from direct sunlight, naked flames or heat.

- Only use attachments or accessories specified by the manufacturer.
- The battery shall not be exposed to excessive heat such as sunshine, fire or the like.
- Do not place any sources of danger on the speaker (e.g. lighted candles).

Note

- The type plate is located on the bottom of the speaker.

Notice

Any changes or modifications made to this device that are not expressly approved by Gibson Innovations may void the user's authority to operate the equipment.

Compliance

CE 0890

Hereby, Gibson Innovations declares that this product is in compliance with the essential requirements and other relevant provisions of Directive 1999/5/EC. You can find the Declaration of Conformity on www.philips.com/support.

Care of the environment

Disposal of your old product and battery



Your product is designed and manufactured with high quality materials and components, which can be recycled and reused.



This symbol on a product means that the product is covered by European Directive 2012/19/EU.



This symbol means that the product contains a built-in rechargeable battery covered by European Directive 2013/56/EU which cannot be disposed of with normal household waste. We strongly advise you to take your product to an official collection point or a Philips service centre to have a professional remove the rechargeable battery.

Inform yourself about the local separate collection system for electrical and electronic products and rechargeable batteries. Follow local rules and never dispose of the product and rechargeable batteries with normal household waste. Correct disposal of old products and rechargeable batteries helps prevent negative consequences for the environment and human health.

Caution

- Removal of the built-in battery invalidates the warranty and may destroy the product.

Always bring your product to a professional to remove the built-in battery.

Environmental information
All unnecessary packaging has been omitted. We have tried to make the packaging easy to separate into three materials: cardboard (box), polystyrene foam (buffer) and polyethylene (bags, protective foam sheet.)
Your system consists of materials which can be recycled and reused if disassembled by a specialized company. Please observe the local regulations regarding the disposal of packaging materials, exhausted batteries and old equipment.

Trademark notice

Bluetooth

The Bluetooth® word mark and logos are registered trademarks owned by Bluetooth SIG, Inc. and any use of such marks by Gibson Innovations Limited is under license. Other trademarks and trade names are those of their respective owners.

2 Your Bluetooth speaker

Congratulations on your purchase, and welcome to Philips! To fully benefit from the support that Philips offers, register your product at www.philips.com/welcome.

Introduction

This speaker has passed splash-proof test (IPX4) and can be used near water.

With this speaker, you can enjoy audio from Bluetooth-enabled devices or other external devices.

What's in the box

Check and identify the contents of your package:

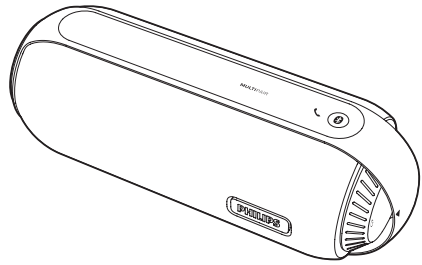







- Speaker
- USB cable for charging
- Printed materials

Overview of the speaker

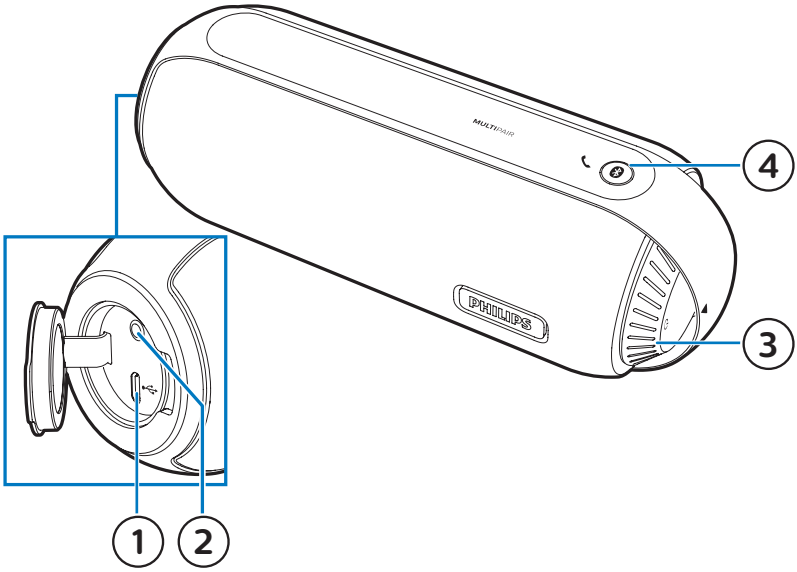

①
- Charge the built-in battery.

② **AUDIO IN**
- Connect an external audio device.

③ **Volume knob ( )**
- Turn the speaker on or off.
- Adjust volume.

④
- Enter Bluetooth pairing mode.
- After Bluetooth connection, respond to an incoming call.
- Clear Bluetooth pairing information.

3 Get started

Always follow the instructions in this chapter in sequence.

Charge the built-in battery

The speaker is powered by the built-in rechargeable battery.

Note

- It takes you approximately four hours to fully charge the battery.
- Rechargeable battery has a limited number of charge cycles. Battery life and number of charge cycles vary by use and settings.
- When the battery is low, the LED indicator flashes red for ten minutes, and then turns off.

To recharge the built-in battery:

- Connect the speaker to AC power by using the adaptor (not supplied).

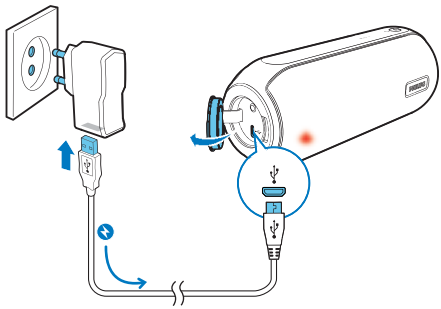

System status	Battery status	LED status
On	Low power	Flashing red for 10 minutes, then turn off
On	Under charging	Solid red for 5 seconds, then turn off
Off	Under charging	Solid red
Off	Fully charged	Turn off

Turn on/off

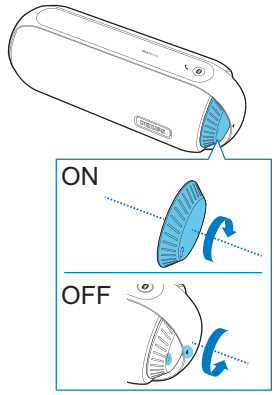

To turn the speaker on or off, rotate the knob clockwise or anticlockwise until you hear a click.

↳ When the speaker is turned on, the blue LED indicator flashes.

↳ When the speaker is turned off, the blue LED indicator lights off.

Note

- The speaker turns off automatically when being idle for 15 minutes.

4 Use Bluetooth devices

With this speaker, you can listen to audio from Bluetooth-enabled devices and control the incoming call through Bluetooth.

Connect a Bluetooth device

Note

- Make sure that Bluetooth function is enabled on your device, and your device is set as visible to all other Bluetooth devices.
- Any obstacle between this speaker and a Bluetooth device can reduce the operational range.
- Keep away from any other electronic device that may cause interference.
- The operational range between this speaker and a Bluetooth device is approximately 10 meters.

1 Turn on the speaker.
↳ The blue LED indicator flashes.

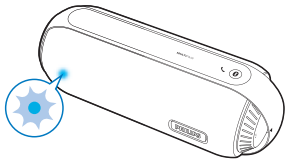

2 On your Bluetooth device, enable Bluetooth and search for Bluetooth devices that can be paired (see the user manual of the device).

3 Select **[Philips BT6700]** displayed on your device for pairing. If necessary, input “0000” as the pairing password.
↳ After successful connection, the speaker beeps twice, and the Bluetooth indicator turns solid blue.

Connect two Bluetooth devices simultaneously

You can pair and connect a maximum of two Bluetooth-enabled devices to the speaker at the same time.

- If the speaker is already connected to one device, press and hold ✱ for two seconds to enter pairing mode.
  ↳ The Bluetooth indicator flashes blue quickly.
  ↳ The speaker is ready to pair with a new Bluetooth device.
  ↳ The previous device is disconnected with the speaker. You need select **[Philips BT6700]** for reconnection.
- If the speaker is connected to two devices at the same time, press and hold ✱ for two seconds to enter pairing mode.
  ↳ The two Bluetooth devices are disconnected, and the speaker is ready for pairing.

Bluetooth indicator	Description
Flashing blue quickly	Ready for pairing
Flashing blue slowly	Connecting the previously connected device
Solid blue	Connected

Play from Bluetooth device

Note

- Music play pauses when there is an incoming call, and resumes when your phone call ends.

- After successful Bluetooth connection, play audio on any connected device.
  ↳ Audio streams from your Bluetooth device to the speaker.

Disconnect a device

- Press and hold ⦿ for two seconds;
- Turn off the speaker;
- Disable Bluetooth on your device; or
- Move the device beyond the communication range.

Reconnect a device

- When you turn on the speaker, it tries to reconnect the last connected device automatically;
- If not successful, select **[Philips BT6700]** on your Bluetooth menu to start reconnection.

Clear pairing information

- Press and hold ⦿ for 10 seconds.

Control your phone call

After Bluetooth connection, you can control an incoming call with this speaker.

Button	Function
⦿	Press to answer an incoming call.
	Press and hold for two seconds to reject an incoming call.
	During a call, press to end the current call.
	During a call, press and hold for two seconds to transfer the call to your mobile device.

5 Other features

Listen to an external device

With this speaker, you can also listen to an external audio device such as an MP3 player.

Note

- Make sure that music playback through Bluetooth is stopped.

1 Open the protective cover on the left of the speaker.

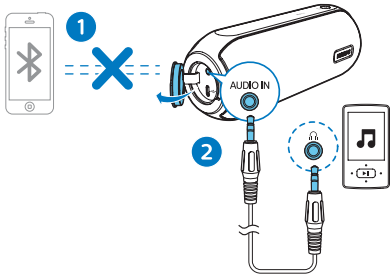

2 Connect an audio input cable (not supplied) with a 3.5 mm connector on both ends to
   - the **AUDIO IN** socket on this speaker, and
   - the headphone socket on the external device.

3 Play audio on the external device (refer to its user manual).

Tip

- When you start music streaming from a connected Bluetooth device, the speaker switches to the Bluetooth source automatically.

Adjust volume

During play, rotate the knob to increase or decrease volume.

6 Specifications

Note

- Product information is subject to change without prior notice.

Rated output power (Amplifier)	12W RMS
Acoustic frequency response	100-20000 Hz
Speaker driver	2 x 1.5” full range, 8 Ω
Bass enhancement	2 x passive radiator
Bluetooth version	V4.0
Bluetooth supported profiles	HFP V1.5, A2DP V1.2, AVRCP V1.4
Bluetooth frequency band / Output power	2.400GHz ~ 2.483GHz ISM Band / ≤ 4dBm (Class 2)
AUX input level	650mV RMS
Water resistance	IPX4
Built-in battery	Li-ion battery (3.7 V, 4400 mAh)
Play time in battery mode	Approx. 8 hours
Dimensions – Main unit (W x H x D)	188 x 71 x 70 mm
Weight - Main unit	0.5 kg

7 Trouble-shooting

Warning

- Never remove the casing of this device.

To keep the warranty valid, never try to repair the system yourself.
If you encounter problems when using this device, check the following points before requesting service. If the problem remains unsolved, go to the Philips Web page (www.philips.com/support). When you contact Philips, make sure that the device is nearby and the model number and serial number are available.

General

No power

- Recharge the speaker.

No sound

- Adjust volume on this product.
- Adjust volume on the connected device.
- In AUDIO IN mode, make sure that music playback through Bluetooth is stopped.
- Make sure that your Bluetooth device is within the effective operational range.

The LED indicator flashes red for five times and then turns solid red, and the speaker has no repsonse when pressing any key.

- The speaker is in demo mode. Press and hold ⚷ for 20 seconds to exit this mode.

About Bluetooth device

The audio quality is poor after connection with a Bluetooth-enabled device.

- The Bluetooth reception is poor. Move the device closer to this product or remove any obstacle between them.

Fail to find [Philips BT6700] on your device for pairing.

- Press and hold ⚷ for two seconds to enter pairing mode, and then try again.

Cannot connect with the device.

- The Bluetooth function of the device is not enabled. Refer to the user manual of the device for how to enable the function.
- This product is already connected with two Bluetooth devices. Press and hold ⚷ for two seconds, and then try again.

The paired device connects and disconnects constantly.

- The Bluetooth reception is poor. Move the device closer to this product or remove any obstacle between them.
- For some devices, Bluetooth connection may be deactivated automatically as a power-saving feature. This does not indicate any malfunction of this product.



2016 © Gibson Innovations Limited. All rights reserved.
This product has been manufactured by, and is sold under the responsibility of Gibson Innovations Ltd., and Gibson Innovations Ltd. is the warrantor in relation to this product.
Philips and the Philips Shield Emblem are registered trademarks of Koninklijke Philips N.V. and are used under license.

BT6700_00 _UM_V1.0