Operating instructions

Table-height refrigerator

EN

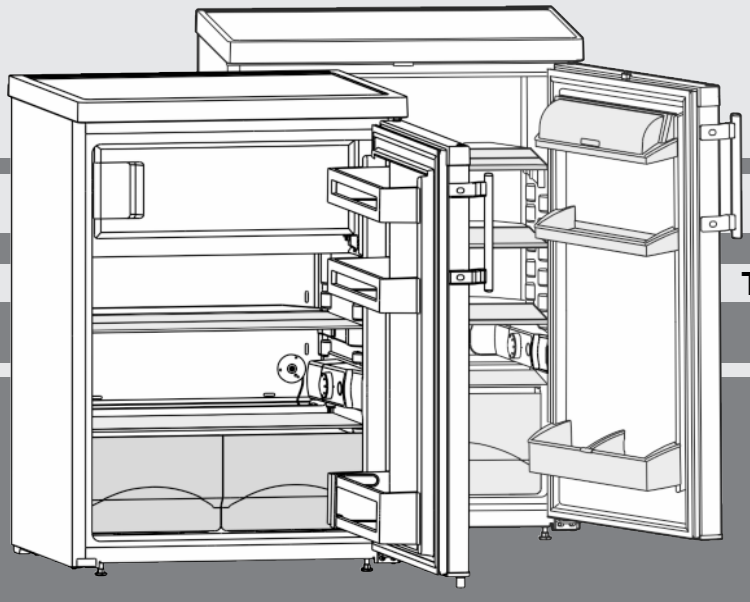

220216 **7081996 - 03**

T/TP/TP(esf)/Tb14../15../17../18.. ... 1

LIEBHERR

Contents

1	**Appliance at a glance**	**2**
1.1	Description of appliance and equipment	2
1.2	Appliance range of use	2
1.3	Conformity	3
1.4	Installation dimensions	3
1.5	Saving energy	3
2	**General safety information**	**3**
3	**Controls and displays**	**4**
3.1	Operating controls	4
4	**Putting into operation**	**4**
4.1	Transporting the appliance	4
4.2	Installing the appliance	5
4.3	Changing over the door hinge	5
4.4	Undercounter installation	6
4.5	Insertion into a row of kitchen units	7
4.6	Disposing of packaging	7
4.7	Connecting the appliance	7
4.8	Switching on the appliance	7
5	**Control**	**7**
5.1	Refrigerator compartment	7
5.2	Freezer compartment	9
6	**Maintenance**	**9**
6.1	Defrosting	9
6.2	Cleaning the appliance	9
6.3	Changing the interior light	10
6.4	Customer service	10
7	**Malfunctions**	**10**
8	**Decommissioning**	**11**
8.1	Switching off the appliance	11
8.2	Taking the appliance out of service	11
9	**Disposing of the appliance**	**11**

The manufacturer works constantly on the further development of all the types and models. Therefore please understand that we have to reserve the right to make design, equipment and technical modifications.

To get to know all the benefits of your new appliance, please read the information contained in these instructions carefully.

The instructions apply to several models. Differences may occur. Text relating only to specific appliances is marked with an asterisk (*).

Instructions for action are marked with a ▶, the results of action are marked with a ▷.

1 Appliance at a glance

1.1 Description of appliance and equipment

Note

▶ Place food inside the appliance as shown in the diagram. This allows the appliance to save energy during operation.

▶ Shelves, drawers and baskets are arranged for optimum energy efficiency on delivery.

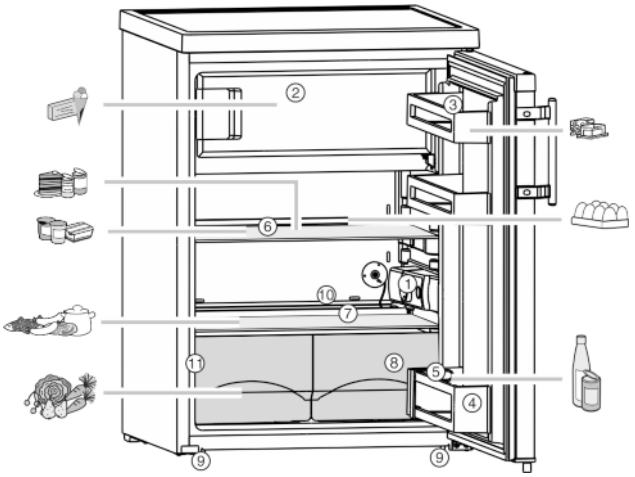

Fig. 1

(1) Thermostat housing, interior lighting
(2) Freezer compartment*
(3) Butter and cheese tray
(4) Bottle rack*
(5) Bottle holder*
(6) Shelf, relocatable
(7) Coldest zone
(8) Vegetable crisper
(9) Adjustable feet at the front and castors* at the rear
(10) Condensate drain
(11) Type plate

1.2 Appliance range of use

Intended use

The appliance is only suitable for refrigerating food in a domestic or domestic-like environment. This includes, for example, using

- in staff kitchens, bed and breakfast establishments,
- by guests in country houses, hotels, motels and other accommodation,
- for catering and similar services in the wholesale trade.

All other types of use are not permitted.

Foreseeable misuse

The following applications are expressly forbidden:

- Storing and refrigerating medicines, blood plasma, laboratory preparations or similar substances and products based on the Medical Device Directive 2007/47/EC
- Use in areas at risk of explosions

Misusing the appliance may lead to damage to the goods stored or they may spoil.

Climate classifications

Depending on the climate classification the appliance is designed to operate in restricted ambient temperatures. The climate classification applying to your appliance is printed on the rating plate.

Note

▶ Keep to the specified ambient temperatures in order to guarantee that the appliance works properly.

Climate classification	for ambient temperatures of
SN	10 °C to 32 °C
N	16 °C to 32 °C
ST	16 °C to 38 °C
T	16 °C to 43 °C

1.3 Conformity

The refrigerant circuit is tested for leakage. The appliance complies with the relevant safety regulations and EC Directives 2006/95/EC, 2004/108/EC, 2009/125/EC and 2010/30/EU.

1.4 Installation dimensions

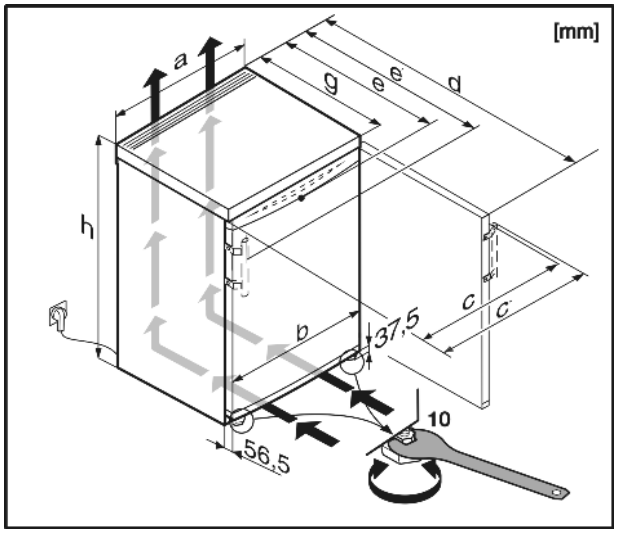

Fig. 2

	a	b	c	c'	d	e	e'	g	h
T1710	554	550	561	590	1125	623	652	610	850
T1810	601	597	612	640	1175	628	654	610	850
TP1710	601	597	612	640	1175[x]	628[x]	654[x]	610[x]	850
TP1720	601	597	612	640	1175[x]	628[x]	654[x]	610[x]	850
TPesf1710	601	597	595	642	1175[x]	608[x]	655[x]	610[x]	850
T1714	601	597	612	640	1175	628	654	610	850
TP1714	601	597	612	640	1175[x]	628[x]	654[x]	610[x]	850
TPesf1714	601	597	595	642	1175[x]	608[x]	655[x]	610[x]	850
TP1724	601	597	612	640	1175[x]	628[x]	654[x]	610[x]	850
TP1410	554	550	561	590	1125[x]	623[x]	652[x]	610[x]	850
TP1414	554	550	561	590	1125[x]	623[x]	652[x]	610[x]	850
TP1434	554	550	561	590	1125[x]	623[x]	652[x]	610[x]	850
T1514	554	550	561	590	1125	623	652	610	850
TP1514	554	550	561	590	1125[x]	623[x]	652[x]	610[x]	850
T1700	554	550	561	—	1125	623	—	610	850
T1504	554	550	561	—	1125	623	—	610	850
T(sl)1414	501	497	505	534	1072	620	649	610	850
TP1424	501	497	505	534	1072[x]	620[x]	649[x]	610[x]	850
T1410	501	497	505	534	1072	620	649	610	850
T1404	501	497	505	—	1072	620	—	610	850
T/Tb1400	501	497	505	—	1072	620	—	610	850

[x] For appliances supplied with wall spacers, the measurement increases by 35 mm (see 4.2) .

1.5 Saving energy

- Pay attention to good ventilation. Do not cover ventilation holes or grids.
- Do not install the appliance in direct sunlight, next to an oven, radiator or similar.
- Energy consumption depends on the installation conditions, e.g. the ambient temperature (see 1.2) .
- Open the appliance for as short a time as possible.
- The lower the temperature is set the higher the energy consumption.
- Sort food before arranging (see Appliance at a glance).
- Store all food well packaged and covered. A build up of frost is avoided.
- Inserting hot food: let it cool to room temperature first.
- Thaw frozen food in the refrigerator.*
- If there is a thick layer of frost in the appliance: defrost the appliance.*

Dust deposits increase energy consumption:

- For refrigerators with heat exchangers dust the metal grid on the back of the appliance once a year.

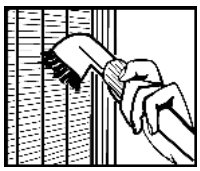

2 General safety information

Danger for the user:

- This appliance can be used by children of 8 years old and over, and also by persons with restricted physical, sensory or mental capacity or lack of experience and knowledge, if they are supervised or have been instructed on safe use of the appliance and understand the resulting risks. Children must not be allowed to play with the appliance. Cleaning and user maintenance must not be carried out by children without supervision.
- When disconnecting the appliance from the supply, always take hold of the plug. Do not pull the cable.
- In the event of a fault pull out the mains plug or deactivate the fuse.
- Do not damage the mains power cable. Do not operate the appliance with a defective mains power cable.
- Have any repairs to or intervention in the appliance, and any change of the mains power cable, carried out by the customer

service only or by other specialised personnel trained for the purpose.
- Only assemble, connect and dispose of the appliance according to the instructions.
- Please keep these instructions in a safe place and pass them on to any subsequent owners.
- Special-purpose lamps (incandescent lamps, LEDs, fluorescent tubes) in the appliance serve to illuminate the appliance interior and are not suited for room illumination.

Fire hazard:

- The refrigerant R 600a is environmentally friendly but flammable. Escaping refrigerant may ignite.
  - Do not damage the refrigerant circuit pipes.
  - Do not allow naked flames or ignition sources to enter the appliance.
  - Do not use any electrical appliances in the interior (e.g. steam cleaners, heaters, ice cream maker etc.).
  - If refrigerant escapes: remove any naked flames or sources of ignition from the leakage area. Ventilate the room well. Notify the after-sales service.
- Do not store explosives or sprays using combustible propellants such as butane, propane, pentane, etc. in the appliance. To identify these spray cans, look for the list of contents printed on the can, or a flame symbol. Gases possibly escaping may ignite due to electrical components.
- Keep burning candles, lamps and other items with naked flames away from the appliance so that they do not set the appliance on fire.
- Please be sure to store alcoholic drinks or other packaging containing alcohol in tightly closed containers. Any alcohol that leaks out may be ignited by electrical components.

Danger of tipping and falling:

- Do not misuse the plinth, drawers, doors etc. as a step or for support. This applies particularly to children.

Danger of food poisoning:

- Do not consume food which has been stored too long.

Danger of frostbite, numbness and pain:

- Avoid lasting skin contact with cold surfaces or refrigerated/frozen food or take protective steps, e.g. wear gloves. Do not consume ice cream, water ice or ice cubes immediately and do not consume them too cold.

Danger of injury and damage:

- Hot steam can lead to injury. Do not use electrical heating or steam cleaning equipment, open flames or defrosting sprays to defrost.
- Do not use sharp implements to remove the ice.

Danger of crushing:

- Do not hold the hinge when opening and closing the door. Fingers may get caught.

Symbols on the appliance:

	The symbol can be located on the compressor. It refers to the oil in the compressor and indicates the following danger: Swallowing or inhaling can be fatal. This is only relevant for recycling. There is no danger in normal operation.

Please observe the specific information in the other sections:

	DANGER	identifies a situation involving direct danger which, if not obviated, may result in death or severe bodily injury.
	WARNING	identifies a dangerous situation which, if not obviated, may result in death or severe bodily injury.
	CAUTION	identifies a dangerous situation which, if not obviated, may result in minor or medium bodily injury.
	NOTICE	identifies a dangerous situation which, if not obviated, may result in damage to property.

	Note	identifies useful information and tips.

3 Controls and displays

3.1 Operating controls

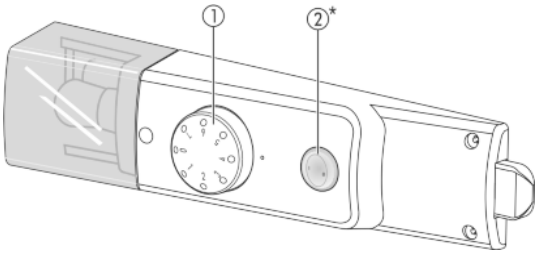

Fig. 3

(1) Temperature controller **(2)** Cool-Plus switch

4 Putting into operation

4.1 Transporting the appliance

CAUTION

Risk of injury and danger of damage as a result of incorrect transport!

▶ Transport the appliance in a packed condition.
▶ Transport the appliance upright.
▶ Do not transport the appliance without assistance.

4.2 Installing the appliance

WARNING
Fire hazard due to dampness!
If live parts or the mains lead become damp this may cause short circuits.
▶ The appliance is designed for use in enclosed areas. Do not operate the appliance outdoors or in areas where it is exposed to splash water or damp conditions.

WARNING
Risk of fire due to short circuit!
If the mains cable/connector of the appliance or of another appliance touch the rear of the appliance, the mains cable/connector may be damaged by the appliance vibrations, leading to a short circuit.
▶ Stand the appliance so that it is not touched by connectors or main cables.
▶ Do not plug the appliance or any others into sockets located near the rear of the appliance.

WARNING
Fire hazard due to refrigerant!
The refrigerant R 600a is environmentally friendly but flammable. Escaping refrigerant may ignite.
▶ Do not damage the piping of the refrigeration circuit.

WARNING
Fire hazard and danger of damage!
▶ Do not place appliances emitting heat e.g. microwaves, toasters etc. on the appliance!

WARNING
Blocked ventilation openings pose a risk of fire and damage!
▶ Always keep the ventilation openings clear. Always ensure that the appliance is properly ventilated!

❑ In the event that the appliance is damaged, contact the supplier immediately before connecting to the mains.
❑ The floor at the site must be flat and level.
❑ Do not install the appliance in a location where it is exposed to direct radiation of the sun, next to a cooker, heater and similar.
❑ Always stand the appliance backed directly to the wall using the enclosed wall spacers (see below).
❑ The appliance may be moved only when it is empty.
❑ Do not install the appliance without assistance.
❑ The more R 600a refrigerant there is in the appliance, the larger the room in which the appliance is standing needs to be. In rooms that are too small, a flammable mix of gas and air may be created if there is a leak. According to the EN 378 standard, every 11 g of R 600a refrigerant requires at least 1 m^3 space in the room for the appliance. The amount of refrigerant in your appliance is on the type plate inside the appliance.

▶ Detach the connecting cable from the rear of the appliance, removing the cable holder at the same time because otherwise there will be vibratory noise!
▶ Remove the protective film from the outside of the appliance.*
▶ Remove the protective film from the decorative trims.
▶ Remove all transit supports.

The spacers supplied with some appliances must be used to achieve the stated energy consumption. These will extend the depth of the appliance by approx. 35 mm. The appliance is fully functional if the spacers are not used, but does have a slightly higher energy consumption.

▶ In the case of an appliance with enclosed wall spacers, mount the wall spacers on the back of the appliance at the top left and right.

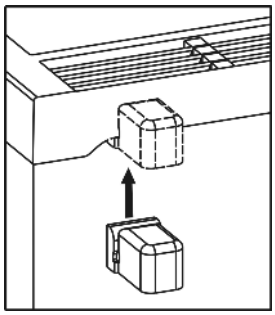

▶ Dispose of packaging material (see 4.6) .
▶ Align the appliance so that it stands firmly and on a level by applying the accompanying spanner to the adjustable-height feet (A) and using a spirit level.

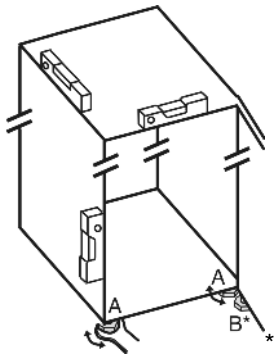

Note
▶ Clean the appliance (see 6.2) .

If the appliance is installed in a very damp environment, condensate may form on the outside of the appliance.
▶ Always see to good ventilation at the installation site.

4.3 Changing over the door hinge*

You can change over the door hinges if necessary.

Make sure that the following tools are at hand:
❑ Torx® 25
❑ Torx® 15
❑ Supplied open-ended wrench
❑ If necessary, a second person to assist with installation

CAUTION
Risk of injury if the door tips!
▶ Take good hold of the door.
▶ Set down the door carefully.

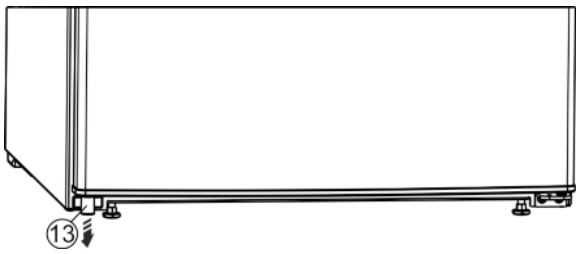

Fig. 4

▶ Remove the spacer *Fig. 4 (13)* from under the left-hand side of the door.

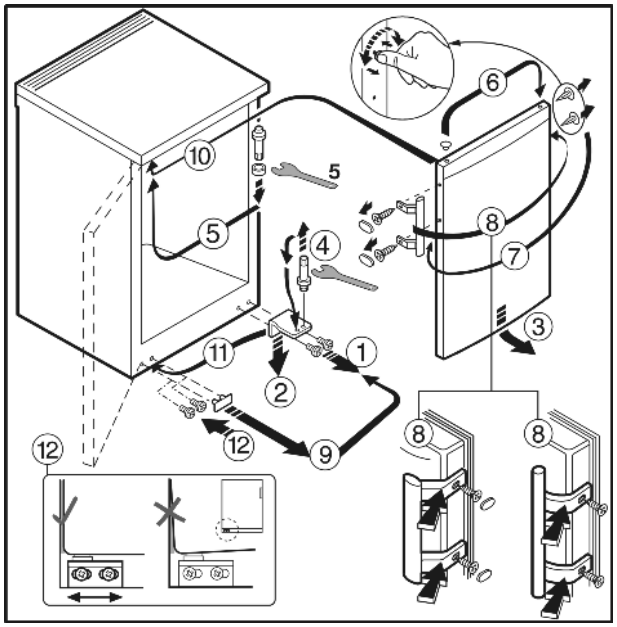

Fig. 5 On appliances with a door handle

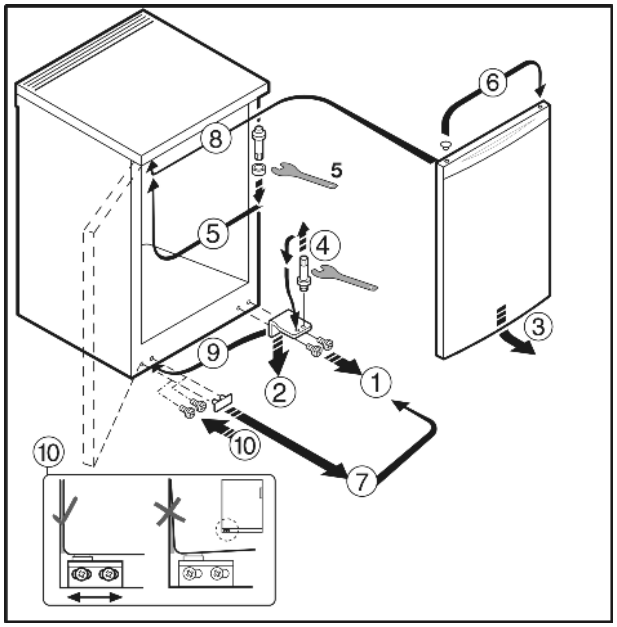

Fig. 6 On appliances without a door handle

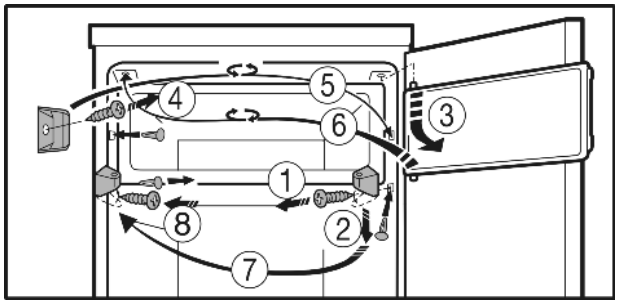

Fig. 7 On appliances with a freezer compartment

▶ Follow the sequence of the item numbers in the diagram.

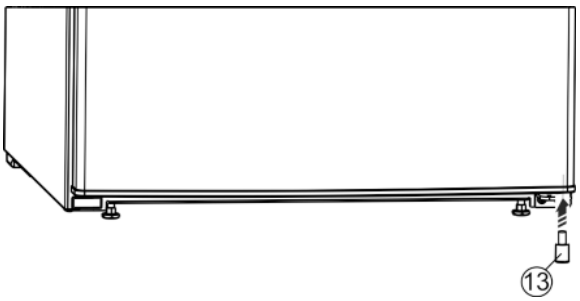

Fig. 8

▶ Insert the spacer *Fig. 8 (13)* back under the right-hand side of the door, as it is important for the stability of the appliance.

WARNING

Risk of injury due to the door dropping out!

If the bearing parts are not screwed into place firmly enough, the door may drop out. This may lead to severe injuries. What is more, the door may not close and therefore the appliance may fail to cool properly.

▶ Screw on the bearing brackets/bearing pins tightly (4 Nm).
▶ Check all of the screws and retighten if necessary.

4.4 Undercounter installation

WARNING

Fire hazard from short-circuiting!

▶ When pushing the appliance into the recess, take care not to crush, jam or damage the mains power cable.
▶ Do not operate the appliance with a defective mains power cable.

Counter height appliances up to 850 mm in height can be installed below the worktop. In the case of continuous worktops, the cover on the refrigerator can be removed and the appliance slid in under the worktop.

With such installations, the plug *Fig. 9 (1)* must not be located behind the appliance and must be easily accessible.

For the purpose of ventilation and aeration at the rear of the appliance, a min.140 cm^2 ventilation cavity is required. With an installation depth of 600 mm, the wall connection profile on the worktop must not exceed a max. 10 mmin depth.

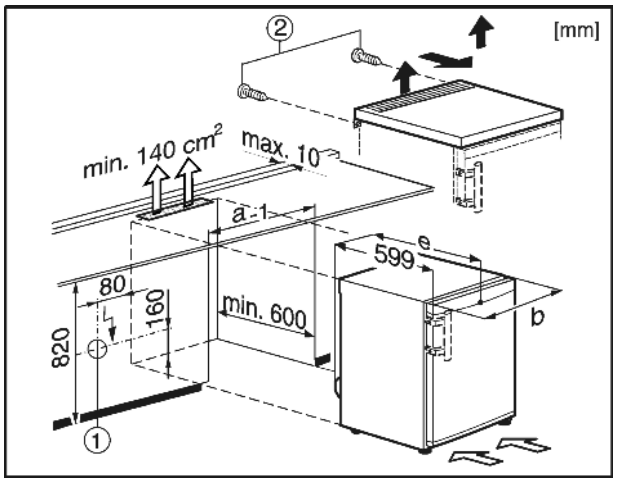

Fig. 9

In order to take off the appliance cover:

▶ Remove the screws *Fig. 9 (2)* from the rear side.
▶ Raise the cover up at the back, slide forward and lift up and off the appliance.

4.5 Insertion into a row of kitchen units

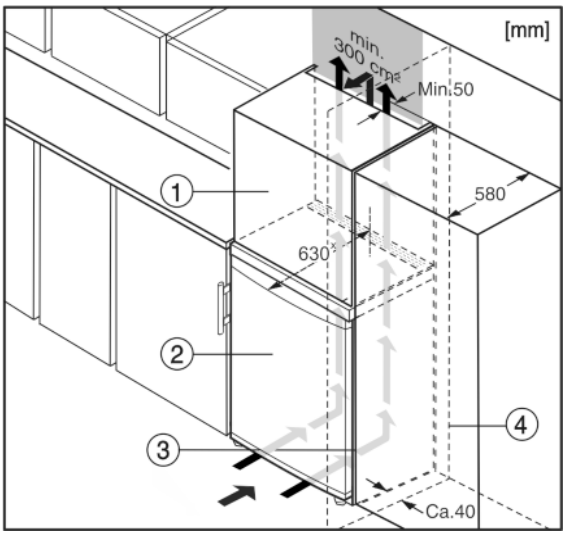

Fig. 10

(1) Stack cabinet
(2) Appliance
(3) Kitchen cabinet
(4) Wall

[x] For appliances supplied with wall spacers, the measurement increases by 35 mm (see 4.2) .

The appliance can be built into kitchen units. A top cupboard *Fig. 10 (2)* can be added above the appliance in order to bring the appliance *Fig. 10 (1)* up to the height of the fitted kitchen units.

When installing with kitchen units (max. depth 580 mm), the appliance can be positioned directly next to the kitchen cabinet *Fig. 10 (3)*. The appliance will project by 34 mm[x] at the sides and 50 mm[x] in the centre of the appliance in relation to the kitchen cabinet front.

Ventilation requirements:

- At the back of the stack cabinet there has to be a ventilation duct of at least 50 mm depth throughout the width of the stack cabinet.
- The cross section of the ventilation gap below the ceiling must be at least 300 cm^2.
- the larger the ventilation space, the more energy-saving the appliance is in operation.

If the appliance is installed with the hinges next to a wall *Fig. 10 (4)*, the distance between appliance and wall has to be at least 40 mm. This corresponds to the projection of the handle when the door is open.

4.6 Disposing of packaging

WARNING
Danger of suffocation due to packing material and plastic film!
▶ Do not allow children to play with packing material.

The packaging is made of recyclable materials:

- corrugated board/cardboard
- expanded polystyrene parts
- polythene bags and sheets
- polypropylene straps
- nailed wooden frame with polyethylene panel*

▶ Take the packaging material to an official collecting point.

4.7 Connecting the appliance

NOTICE
Failure to connect properly
Damage to the electronics.
▶ Do not use a standalone inverter.
▶ Do not use an energy saving plug.

WARNING
Failure to connect properly
Fire.
▶ Do not use an extension cable.
▶ Do not use distributor blocks.

The type of current (alternating current) and voltage at the installation site have to conform with the data on the type plate (see Appliance at a glance).

The socket must be properly earthed and fused. The tripping current for the fuse must be between 10 A and 16 A.

The socket must be easily accessible so that the appliance can be quickly disconnected from the supply in an emergency. It must be outside the area of the rear of the appliance.

▶ Check the electrical connection.
▶ Plug in the power plug.

4.8 Switching on the appliance

Put the appliance into operation about 2 hours before first loading food to be frozen.

▶ Turn the temperature control *Fig. 3 (1)* to the right, from the 0 setting to point 3.
▷ The interior light is on.

5 Control

5.1 Refrigerator compartment

The natural circulation of air in the refrigerator compartment results in zones differing in temperature. It is coldest directly above the vegetable drawers and at the rear wall. It is warmest at the top front of the compartment and in the door.

5.1.1 Food refrigeration

▶ Store perishable food such as ready-to-serve dishes, meat products and sausages in the coldest zone. Place butter and preserves in the upper area and in the door (see Appliance at a glance).
▶ Use recyclable plastic, metal, aluminium and glass containers and cling film for wrapping.
▶ Always store liquids and food which is subject to odour or taste transfer in closed containers or cover them.
▶ Foods which give off a large amount of ethylene gas and delicate foods, such as fruit, vegetables, salad, should always be stored separately or wrapped so as not to reduce the storage life; e.g. do not store tomatoes together with kiwis or cabbage.
▶ Do not store food too close together to enable good air circulation.
▶ To safeguard bottles from tipping over: move the bottle holder.

5.1.2 Setting the temperature

The temperature can be set between 1 (warmest temperature, minimum cooling performance) and 7 (coldest temperature, maximum cooling performance).

The middle control setting is recommended, then a middle temperature of approx.5 °C is established in the refrigerator compartment.

To ensure ideal temperatures for storing frozen foods, a setting of “4” to “7” on the temperature controller is recommended. Selecting “7” makes it possible to achieve temperatures under 0 °C in the coldest part of the fridge compartment.

An average temperature of approx. –18 °C is then established in the freezer compartment

▶ Turn the temperature control *Fig. 3 (1)*.

The temperature depends on the following factors:

- the door opening frequency
- the room temperature at the site where the appliance is installed
- the type, temperature and quantity of frozen food

▶ Adjust the temperature as needed, using the control.

5.1.3 CoolPlus function*

At low room temperatures of 18 °C or lower:

▶ Press the Cool-Plus switch *Fig. 3 (2)*.

▷ The deep temperatures in the freezer compartment are ensured.

▷ **The appliance's interior lighting is lit on a dim setting even when the door is closed.**

Once the room temperature is again higher than18 °C :

▶ Deactivate the Cool-Plus *Fig. 3 (2)* switch manually.

Note

▶ At normal room temperatures, in excess of 18 °C, the Cool-Plus switch should be turned off, as it is **not** required.

5.1.4 Shelves

Moving or removing shelves

The shelves have stops preventing them from being unintentionally pulled out.

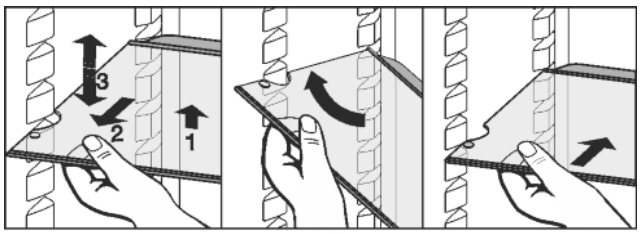

Fig. 11

▶ Lift the shelf slightly and pull forward a little.

▶ Adjust the height of the shelf. To do so, push the cut-outs along the supports.

▶ In order to remove the shelf fully, place it at a slant and pull out towards the front.

▶ Insert shelf with the raised edge pointing upwards at the back.

▷ The food does not freeze onto the rear wall.

Dismantling shelves

▶ The shelves can be dismantled for cleaning.

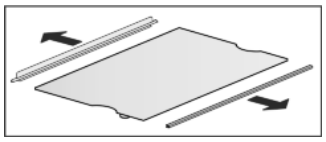

5.1.5 Using the sectioned shelf

CAUTION

Danger of laceration!

The shelf may break. The broken fragments may cause laceration.

▶ Remove only empty shelves.

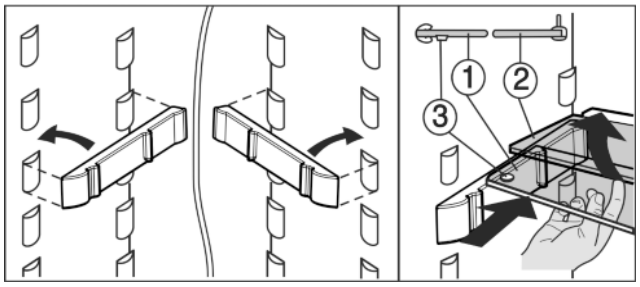

*Fig. 12**

▶ The glass shelf with stop face (2) has to be at the back.*

▶ The glass plate (1) with pull-out stops must be at the front so that the stops (3) face downwards.*

Adjusting the height:

▶ Pull the glass plates out forwards one by one.*

▶ Remove the support from the catch mechanism and click into place at the required height.*

Using both shelves:

▶ Lift the top glass plate and pull the bottom glass plate forwards.*

5.1.6 Door racks

Removing the storage rack

▶ Remove storage rack according to illustration.

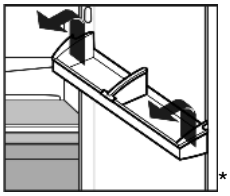

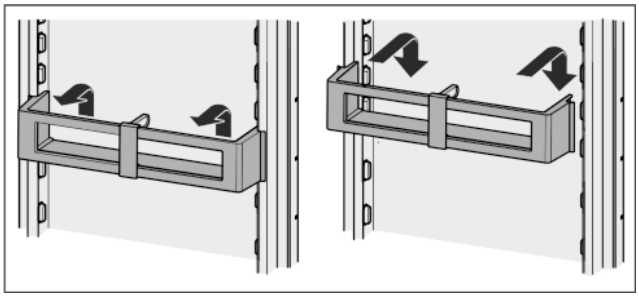

*Fig. 13**

Dismantling door racks*

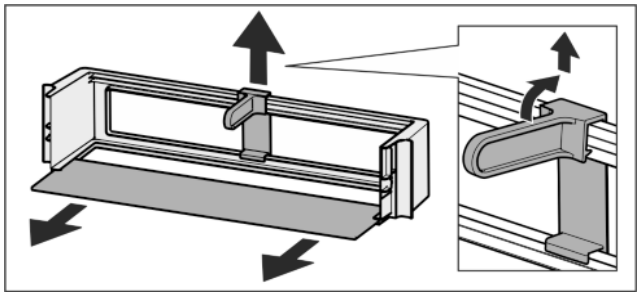

Fig. 14

▶ The door racks can be dismantled for cleaning.

5.1.7 Removing the bottle holder

▶ Remove the bottle holder according to the illustration.

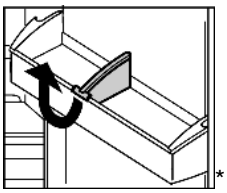

5.2 Freezer compartment*

You can store frozen food for several months, make ice cubes and freeze fresh food in the freezer compartment at a temperature of -18 °C and lower.

The air temperature in the compartment, measured by thermometer or other instruments, may fluctuate.

5.2.1 Freezing food*

2 kg fresh food/24 h is the maximum weight which can be frozen.

CAUTION
Risk of injury due to broken glass!
Bottles and cans containing drinks may burst when being frozen. This applies particularly to sparkling drinks.
▶ Do not freeze bottles and cans containing drinks!

▶ To switch on Cool-Plus: press Cool-Plus button. *Fig. 3 (2)*

In order that the food is rapidly frozen through to the core, do not exceed the following quantities per pack:

- Fruit, vegetables up to 1 kg
- Meat up to 2.5 kg

▶ Pack the food in portions in freezer bags, reusable plastic, metal or aluminium containers.
▶ Spread the food over the shelf. Do not allow it to contact and thaw items that are already frozen.
If the room temperature is higher than 18 °C:
▶ switch off Cool-Plus: press Cool-Plus button *Fig. 3 (2)* .

5.2.2 Storage times*

Guide times for storing various types of food in the freezer compartment:	
Ice cream	2 to 6 months
Sausage, ham	2 to 6 months
Bread, bakery products	2 to 6 months
Game, pork	6 to 10 months
Fish, fatty	2 to 6 months
Fish, lean	6 to 12 months
Cheese	2 to 6 months
Poultry, beef	6 to 12 months
Vegetables, fruit	6 to 12 months

Storage times given are guide times.

5.2.3 Thawing food*

- in the refrigerator compartment
- in a microwave oven
- in a conventional or fan oven
- at room temperature

▶ Remove only as much food as is required. Use thawed food as quickly as possible.
▶ Food once thawed should be re-frozen only in exceptional cases.

6 Maintenance

EN

6.1 Defrosting

6.1.1 Defrosting refrigerator compartment

The refrigerator compartment is defrosted automatically. The water evaporates. Drops of water on the rear wall are functionally conditioned and perfectly normal.
▶ Clean the drain hole at regular intervals to allow the defrost water to drain (see 6.2) .

6.1.2 Defrosting freezer compartment*

A layer of frost and ice forms in the freezer compartment after the appliance has been in use for a lengthy period of time. This is quite normal. The layer of frost and ice forms more quickly if the door is opened frequently or if the food is warm when placed inside. However, a thick layer of ice will increase the appliance‘s energy consumption. You should therefore defrost the appliance regularly.

CAUTION
Risk of injury and damage as a result of hot steam!
▶ Do not use electric heaters or steam cleaners, naked flames or defrosting sprays for defrosting.
▶ Do not remove ice using sharp instruments.

▶ Switch off the appliance.
▶ Pull out the plug.
▶ Wrap the frozen food in newspaper or blankets and store in a cool place.
▶ Leave the compartment and appliance door open during defrosting.
▶ Remove detached pieces of ice.
▶ If necessary, pick up defrost water several times, using a sponge or cloth.
▶ Clean the compartment (see 6.2) .

6.2 Cleaning the appliance

WARNING
Risk of injury and damage as a result of hot steam!
Hot steam can lead to burns and can damage the surfaces.
▶ Do not use any steam cleaners!

NOTICE
Incorrect cleaning damages the appliance!
▶ Do not use cleaning agents in concentrated form.
▶ Do not use any scouring or abrasive sponges or steel wool.
▶ Do not use any sharp or abrasive cleaning agents, nor any that contain sand, chloride or acid.
▶ Do not use chemical solvents.
▶ Do not damage or remove the type plate on the inside of the appliance. It is important for the customer service.
▶ Do not pull off, bend or damage cables or other components.
▶ Do not allow any cleaning water to enter the drain channel, ventilation grille or electrical parts.
▶ Please use soft cleaning cloths and a universal pH-neutral cleaning agent.
▶ Please use cleaning and care products suitable for contact with foodstuffs in the appliance interior.

▶ **Empty appliance.**
▶ **Pull out the power plug.**



▶ Clean the **vent grille** regularly.
▷ Dust deposits increase energy consumption.
▶ Clean **plastic outer and inner surfaces** with lukewarm water and a little washing-up liquid.
▶ Only use a soft clean cloth to wipe **side walls with a paint finish**. In the case of heavy soiling, use lukewarm water with neutral cleaning agent.
▶ Use only a soft clean cloth to wipe **door surfaces** with a paint finish. In the case of heavy soiling, use a little water or neutral cleaning agent. A micro-fibre cloth can be used optionally.*

Do not apply stainless steel cleaning agent to glass or plastic surfaces to prevent them from being scratched. Darker areas at the beginning and quite an intensive colour of the stainless steel surface are normal.*

▶ When soiled, clean **stainless steel outer surfaces** with a commercially available stainless steel cleaning agent. Then apply the enclosed stainless steel care product evenly in the direction of polishing.*

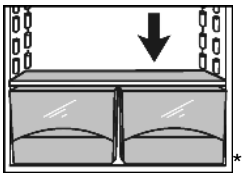

*

▶ Clean **drain hole**: Remove deposits with a narrow instrument, e.g. a cotton bud.

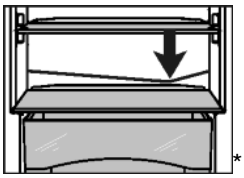

*

▶ Clean **items of equipment** by hand with lukewarm water and a little washing-up liquid.

After cleaning:
▶ Wipe dry the appliance and items of equipment.
▶ Connect the appliance and switch it on again.
▶ Put the food back inside.

6.3 Changing the interior light

max. 15 W
Socket: E14
Type of current and voltage must conform with the details on the type plate

▶ Switch off the appliance.
▶ Pull out the power plug or switch off the fuse.
▶ Take hold of the lamp cover.
▶ As shown in the diagram, press open the lamp cover on the inside at the front, and pull it off to the side.
▶ Change the bulb.
▶ Put on the lamp cover again and snap it into place.

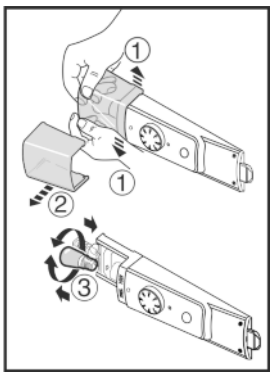

6.4 Customer service

First check whether you can correct the fault yourself by reference to the list (see Malfunction). If this is not the case, please contact the customer service whose address is given in the enclosed customer service list.

WARNING
Risk of injury if repair work is not carried out professionally!
▶ Have any repairs and action - not expressly specified - on the appliance and mains cable carried out by service personnel only. (see Maintenance)

▶ Read the appliance designation *Fig. 15 (1)*, service No. *Fig. 15 (2)* and serial No. *Fig. 15 (3)* off the type plate located inside the appliance on the left-hand side.

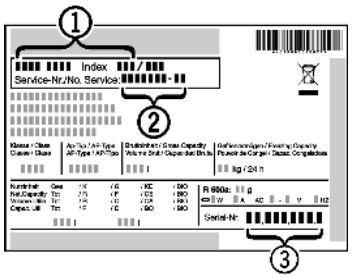

Fig. 15

▶ Notify the customer service, specifying the fault, appliance designation *Fig. 15 (1)*, service No. *Fig. 15 (2)* and serial No. *Fig. 15 (3)*.
▷ This will help us to provide you with a faster and more accurate service.
▶ Keep the appliance closed until the customer service arrives.
▷ The food will stay cool longer.
▶ Pull out the mains plug (not by pulling the connecting cable) or switch off the fuse.

7 Malfunctions

Your appliance is designed and manufactured for a long life span and reliable operation. If a malfunction nonetheless occurs during operation, check whether it is due to a handling error. In this case you will have to be charged for the costs incurred, even during the warranty period. You may be able to rectify the following faults yourself:

Appliance does not work.
→ The appliance is not switched on.
▶ Switch on the appliance.
→ The power plug is not properly inserted in the wall socket.
▶ Check power plug.
→ The fuse of the wall socket is not in order.
▶ Check fuse.

The compressor runs for a long time.
→ The compressor switches to a low speed when little cold is needed. Although the running time is increased as a result, energy is saved.
▶ This is normal in energy-saving models.

A LED on the bottom rear of the appliance (at the compressor) flashes regularly every 15 seconds*.
→ The inverter is equipped with a diagnostic LED.
▶ The flashing is normal.

Excessive noise.
→ Due to the various speed steps, speed-regulated* compressors can generate different running noises.
▶ The sound is normal.

A bubbling and gurgling noise.
→ This noise comes from the refrigerant flowing in the refrigeration circuit.
▶ The sound is normal.

A quiet clicking noise.
→ The noise is produced whenever the refrigeration unit (motor) automatically switches on or off.
▶ The sound is normal.

A hum. It is briefly a little louder when the refrigeration unit (the motor) switches on.

→ The refrigeration increases automatically when fresh food has just been placed in the appliance or the door has been left open for a while.

▶ The sound is normal.

→ The ambient temperature is too high.

▶ Solution: (see 1.2)

Vibratory noise.

→ The appliance is not fixed to the ground. The running of the cooling unit therefore makes objects and adjacent furniture vibrate.

▶ Adjust appliance via the height-adjustable feet.

▶ Move bottles and containers apart.

The outer surfaces of the appliance are warm*.

→ The heat of the refrigeration circuit is used to prevent condensate from forming.

▶ This is normal.

The temperature is not cold enough.

→ The door of the appliance is not properly closed.

▶ Close the door of the appliance.

→ Insufficient ventilation.

▶ Keep ventilation grille clear, and clean it.

→ The ambient temperature is too high.

▶ Solution: (see 1.2) .

→ The appliance was opened too frequently or for too long.

▶ Wait to see whether the appliance reaches the required temperature by itself. If not, please contact the after sales service (see Maintenance).

→ The appliance is too close to a source of heat (stove, heater etc).

▶ Change the position of the appliance or the source of heat.

The internal light does not come on.

→ The appliance is not switched on.

▶ Switch on the appliance.

→ The bulb is faulty.

▶ Change the bulb (see Maintenance).

▶ If the bulb is defective, the CoolPlus function cannot be activated. In order to ensure that this function will work, the defective bulb should be changed at the earliest opportunity.

Interior light on half power when CoolPlus is switched on.*

→ This is necessary for operational reasons.

▶ This is normal.

8 Decommissioning

8.1 Switching off the appliance

▶ Turn temperature control *Fig. 3 (1)* to 0.

8.2 Taking the appliance out of service

▶ Empty the appliance.

▶ Switch off the appliance (see Decommissioning).

▶ Remove mains connector.

▶ Clean the appliance (see 6.2) .



▶ Leave the door open to prevent odour.

9 Disposing of the appliance



The appliance contains some reusable materials and should be disposed of properly - not simply with unsorted household refuse. Appliances which are no longer needed must be disposed of in a professional and appropriate way, in accordance with the current local regulations and laws.

When disposing of the appliance, ensure that the refrigeration circuit is not damaged to prevent uncontrolled escape of the refrigerant it contains (data on type plate) and oil.

▶ Disable the appliance.

▶ Pull out the plug.

▶ Cut through the connecting cable.

Liebherr-Hausgeräte Marica EOOD
4202 Radinovo
Bezirk Plovdiv
Bulgarien

www.liebherr.com