

Indoor Accessories

UID8600/00 1-10V Dimmer

Indoor lighting control accessories cover all the user interfaces, sensors, cables, dimmers and other accessories that can be used with our control systems or stand-alone with our lighting systems.The performance and capabilities of the products vary according to the system they are connected to.

Product data

- **General Information**

Design	1-10V Dimmer
Lighting Controls Typenumber	UID8600/00

- **Product Data**

Full product code	871829167555600
Order product name	UID8600/00 1-10V Dimmer
EAN/UPC - Product	8718291675556
Order code	67555600
Numerator - Quantity Per Pack	1
Numerator - Packs per outer box	50
Material Nr. (12NC)	913700355603
Net Weight (Piece)	0.118 kg

PHILIPS

Dimensional drawing

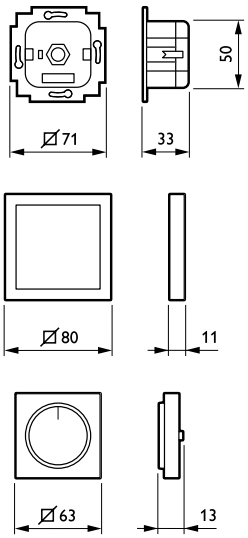

UID8600/8620/8670

UID8600/00 1-10V Dimmer

Product
UID8600/00 1-10V Dimmer

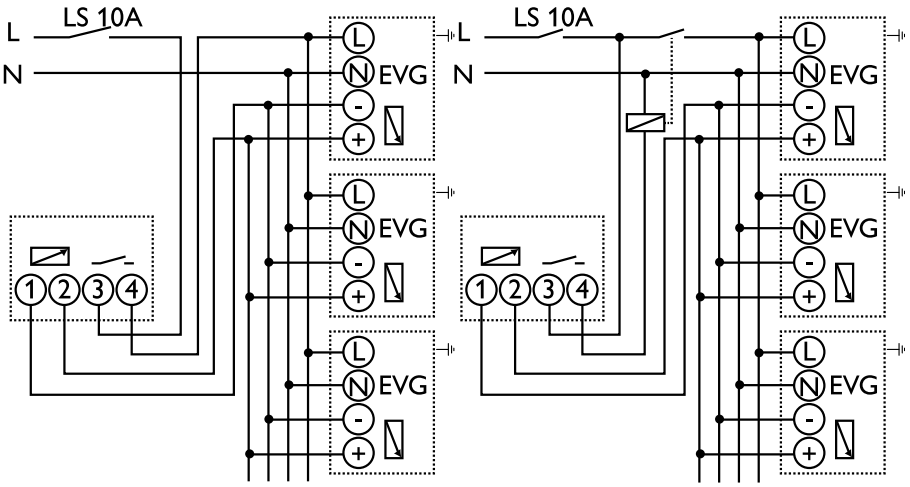

© 2016 Philips Lighting Holding B.V.
All rights reserved.

Specifications are subject to change without notice. Trademarks are the property of Koninklijke Philips N.V. (Royal Philips) or their respective owners.

www.philips.com/lighting