

CoreLine Batten

BN120C LED35S/830 PSU L1200

LED Module, system flux 3500 lm - 830 warm white - Power supply unit - 1200 mm

Whether for a new building or renovation of an existing space, customers want lighting solutions that provide quality of light and substantial energy and maintenance savings. The new CoreLine Batten range of LED products can be used to replace traditional battens with fluorescent lamps. The process of selecting, installing and maintaining is so easy – it's a simple switch.

Product data

• General Information

Number of light sources	2 pcs
Lamp family code	LED Module, system flux 3500 lm
Light source color	830 warm white
Light source replaceable	No
Driver/power unit/ transformer	Power supply unit
Driver included	Yes
Optical cover/lens type	Polycarbonate bowl/cover
Connection	Push-in connector and pull relief
Protection class IEC	Safety class I
Glow-wire test	Temperature 850 °C, duration 5 s
Flammability mark	For mounting on normally flammable surfaces
CE mark	CE mark
ENEC mark	-
Length	1200 mm
Product family code	BN120C

• Operating and Electrical

Input Voltage	220 to 240 V
Input Frequency	50 to 60 Hz

• Controls and Dimming

Dimmable	No

• Mechanical and Housing

Housing Material	Steel
Optic material	Polycarbonate
Optical cover/lens material	Polycarbonate

• Approval and Application

Ingress protection code	IP20 [Finger-protected]
Mech. impact protection code	IK02 [0.2 J standard]

• Initial Performance (IEC Compliant)

Initial luminous flux	3500 lm
Initial LED luminaire efficacy	95 lm/W
Init. Corr. Color Temperature	3000 K
Init. Color Rendering Index	>80
Initial input power	40 W

• Over Time Performance (IEC Compliant)

Median useful life L90B50	15000 h
Median useful life L80B50	30000 h
Median useful life L70B50	50000 h
Driver failure rate at 5000 h	1 %

• Application Conditions

Ambient temperature range	0 to +35 °C
Suitable for random switching	Yes (relates to presence/ movement detection and daylight harvesting)

PHILIPS

CoreLine Batten

- Product Data

Full product code	871016330071999
Order product name	BN120C LED35S/830 PSU L1200
EAN/UPC - Product	8710163300719
Order code	911401595821
Numerator - Quantity Per Pack	1
Numerator - Packs per outer box	4

Material Nr. (12NC)	911401595821
Net Weight (Piece)	1.610 kg

Dimensional drawing

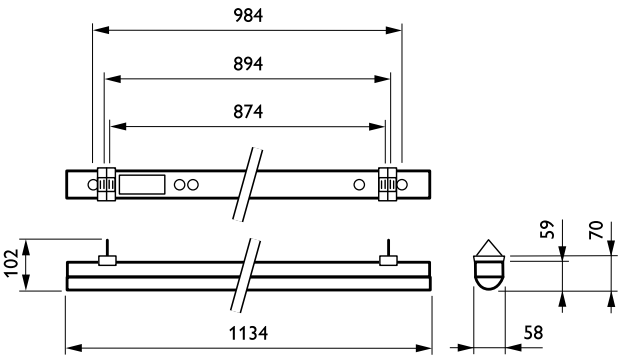

BN120C L1200

© 2016 Philips Lighting Holding B.V.
All rights reserved.

Specifications are subject to change without notice. Trademarks are the property of Koninklijke Philips N.V. (Royal Philips) or their respective owners.

www.philips.com/lighting

2016, June 17
data subject to change