PHILIPS

4404.029.03311
Last update: 13/01/15

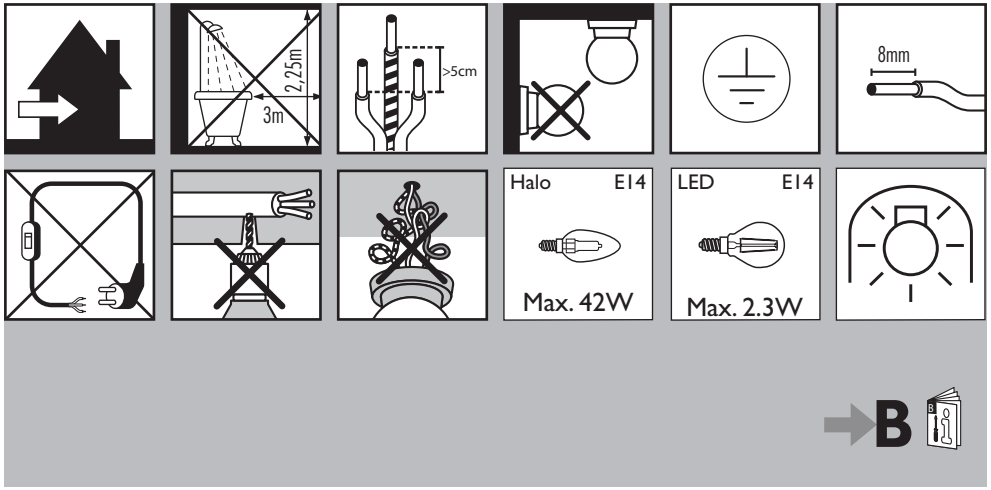

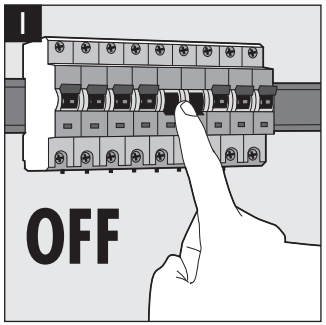

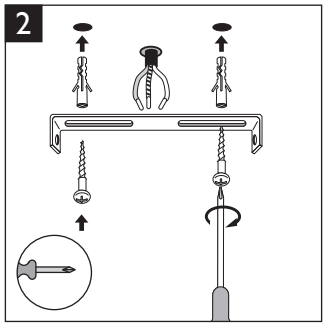

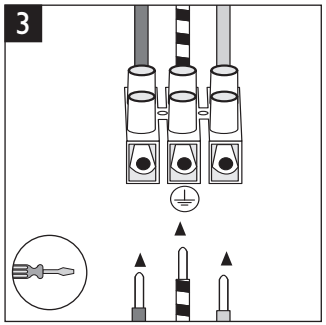

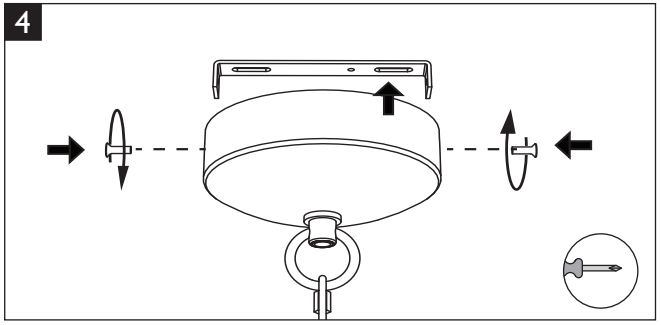

© Copyright

PHILIPS

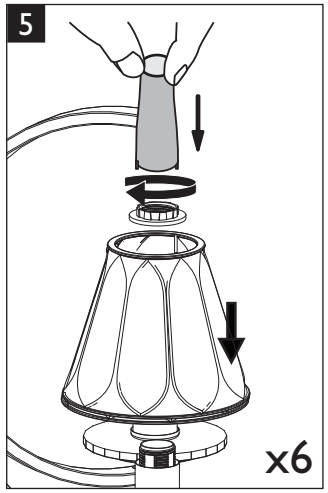

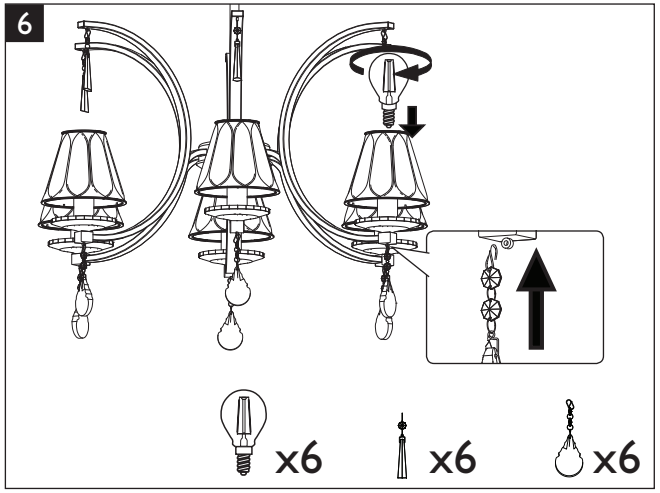

PHILIPS (CHINA) INVESTMENT CO., LTD.
1602-1605, No. 218 Tian Mu Xi Road, Shanghai, PRC 200070
飞利浦(中国)投资有限公司
上海市天目西路218号1602-1605 (邮编：200070)

440402903311.indd All Pages
1/13/2016 2:45:25 PM