890U Series Hospitality TVs

49" Class LED	HG49NE890UF
55" Class LED	HG55NE890UF
65" Class LED	HG65NE890UF

SAMSUNG

SMART TV UHD: The ultra high definition, ultimate in-room experience

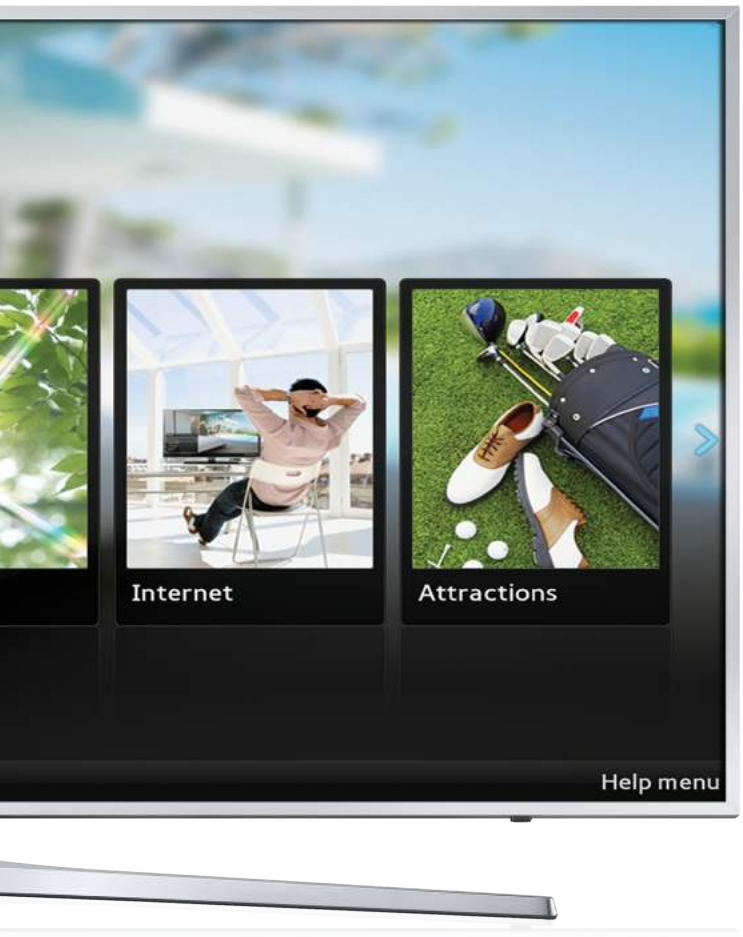

890U Series Hospitality TVs

Superior picture quality and dynamic interactivity, with advanced content management and widgets/applications

The Samsung 890U Series delivers the ultimate in-room guest experience. With exceptional picture quality and sound, these stylish displays treat guests to a totally immersive HD viewing experience. Best of all, each display is a SMART TV, giving guests a whole new level of interactivity that's exclusive to Samsung. With SMART TV 2.0, the hotel experience now includes smart mobile device support, embedded features and access to a multitude of apps and widgets. There are also a host of innovations for the hotelier, like energy-saving performance and remote content management, for cost savings and greater efficiency.

Key features

Stunning UHD (4K) picture

3840 x 2160 resolution (4x the number pixels of Full HD 1080p) delivers life-like image quality. A high-impact way to communicate in hospitality.

Edge-lit LED technology

Edge-lit LED technology provides the brilliance and energy savings advantages of LED technology, along with the uniform brightness typical of CCFL displays. And it does it all with an efficiency that makes it a more affordable technology. In fact, it's possible to upgrade your rooms to LED technology for a cost comparable to CCFL technology.

Samsung LYNK™ REACH 4.0 content management solution

Samsung's LYNK REACH 4.0 fuses the benefits of its SINC and REACH hospitality technologies to offer a comprehensive content management solution. LYNK REACH 4.0 enhances the guest experience with efficiency-enhancing technology and perks ranging from more information delivery channels to convenient communication options and efficient room management. As a unified content management solution, LYNK REACH 4.0 accommodates LAN, WIFI and coaxial infrastructures to amplify hotel management, monitoring and guest service functions. Transferred by proprietary management server (PMS) and customized templates, hospitality users can create and deliver personalized service for a more memorable experience. This includes access to a range of IP channels and RF channels, applications and services mirroring what guests expect at home and on their mobile devices. LYNK REACH 4.0 additionally enables two-way communication between hotel management and guests. The solution's efficient remote control capability for in-room display ensures quality service delivery in real time without in-room labor and maintenance.

H-Browser compatibility

H-BROWSER

The Samsung 890U Series offers H-Browser through partnerships with certified system integrators, providing guests with a premium interactive experience. Built on the HTML5 standard with Flash® support, H-Browser is a true Smart TV solution that features both free and video on demand (VOD) content. It is able to interface directly with the head end without the use of a set top box.

Mobile device integration using Smart View

Samsung Smart View lets you seamlessly share content across your DLNA-connected Samsung devices, which includes WiDi, without the need for a network cable or a connecting device. Samsung Smart View allows screen mirroring and video streaming to enable seamless content sharing.

Hospitality TV sales:
1-888-727-2664 | 1-866-SAM4BIZ
samsung.com/business
samsung.com/b2bhospitalitytvs

Follow us
youtube.com/samsungbizusa
@SamsungBizUSA

Samsung 890U Series Hospitality TVs

Samsung Hospitality TVs are loaded with features that provide premier guest satisfaction, while making your job easier.

Hospitality features

Anti-theft battery cover
Battery door is secured, ensuring batteries remain in the remote controller.

Channel remapping
Allows the hotelier to change channel and TV source to a different channel.

Clock on timer and alarm key
Allows the guest to program the TV to turn on as a wake-up alarm.

Closed captioning
A text display of all audio content, including spoken dialog and non-speech information such as the identity of the speakers and symbols for sound effects and music.

Hotel channel list
Guest master channel listing of program content. This will display content in analog or HD.

Hotel logo display with time out setting
Display hotel logo bitmap files as a greeting startup display.

Hotel mode plug & play
Interactive stand-alone mode available.

Lockout controls
The hotelier can enable front panel and menu display lock-outs.

On screen display language
Choose English/French/Spanish.

Picture-in-picture
Display one program while another is being displayed on the full TV screen at the same time.

Power on status setting
Settings include power always on, last option or standby.

Multi-code remote
Eliminates interference when two or more TVs are used in close proximity to each other.

Samsung LYNK™ REACH 4.0 content management solution
Samsung's LYNK REACH 4.0 fuses the benefits of its SINC and REACH hospitality technologies to offer a comprehensive content management solution. LYNK REACH 4.0 enhances the guest experience with efficiency-enhancing technology and perks ranging from more information delivery channels to convenient communication options and efficient room management. As a unified content management solution, LYNK REACH 4.0 accommodates LAN, WIFI and coaxial infrastructures to amplify hotel management, monitoring and guest service functions. Transferred by proprietary management server (PMS) and customized templates, hospitality users can create and deliver personalized service for a more memorable experience. This includes access to a range of IP channels and RF channels, applications and services mirroring what guests expect at home and on their mobile devices. LYNK REACH 4.0 additionally enables two-way communication between hotel management and guests. The solution's efficient remote control capability for in-room display ensures quality service delivery in real time without in-room labor and maintenance.

Sleep timer
Allows guest to set TV turn-off time in 30-minute intervals up to 180 minutes.

USB cloning
A quick and easy way to copy the ideal settings off one television to others on the property. Saves time and helps provide a consistent viewing experience for all televisions.

Connections

Samsung Smart View
Enjoy your favorite digital content from any of your DLNA-connected Samsung Devices. Samsung Smart View lets you wirelessly access and share content between your Samsung devices regardless of where you are. And there's no need for any cables or connected devices. It's also equipped with cloud technology, so you can upload your favorite content to a central web storage account and access it wherever you are.

Anynet + (HDMI – CEC)
This Samsung protocol allows the user to control other HDMI devices connected to the TV display, such as DVD players, PC computers and Soundbars.

ConnectShare™ (USB 2.0)
Connect a thumb drive or digital camera quickly and easily. User-friendly interface allows access to videos, a music playlist and pictures via the remote.

Hotel TV (RJ-12/IR pass through)
Allows you to connect an interactive STB/SBB (Set Top Box/Set Back Box).

Hotel TV RJ45
Connection to hotel LAN using custom H-browser or Samsung LYNK™ SINC.

Interactive compatibility system
ALLIN Enseo Guestek iBAHN infovalue INNVUE nSTREAMS NXTV Quadriga SONIFI tangerine uie

Remote Jack Panel (RJP) compatibility
G-LINK teleadapt

WiFi®
With built-in WiFi, no additional equipment is needed to connect with an existing wireless router in your hotel network and start accessing Samsung Apps or other Smart TV features.

Picture Quality and Audio

4K UHD, MPEG4
Samsung 890U Series TVs feature 4K UHD. All TVs are also compatible with MPEG4.

Auto volume limiter
During initial product setup, minimum and maximum volume levels can be locked to help minimize disturbance to other hotel guests.

Quad core processor
Enahanced processing speeds allow you to perform multiple tasks at the same time with ease, such as using an app while downloading another one. It also enables faster web browsing while playing apps for TV programs that you recently opened through the Recent History feature.

Music mode (input: HDMI/PC/AV/component)
Allows audio feedback when picture is muted.

Music mode backlight on/off
Shows a background display.

Edge-lit LED technology
Samsung's edge-lit 890U Series puts any hotel in the best light possible and delivers an unparalleled guest experience. Available in 49", 55" and 65" picture sizes to fit in a wide range of rooms and suites, these energy-efficient flat panel TVs deliver best-in-class picture quality and value.

Samsung soundbar compatible
Samsung Hospitality Displays enable Soundbar compatibility by supporting HDMI-CEC. When you connect the Soundbar to the Samsung Hospitality Display with an HDMI cable, the TV audio settings and menu lock feature are automatically applied, so you don't have to set up the Soundbar separately. You can also prevent guests from changing the settings. With one single remote, guests can control both the TV and Soundbar simultaneously.

Warranty

2-year parts and 2-year labor warranty backed by Samsung Hospitality Hotline 1-866-894-0524. Optional professional installation, accessories and extended warranty are available.

Samsung 890U Series Hospitality TVs





Digital Rights Management (DRM)

Pro:Idiom™ HD content decryption DRM (IP/RF)

The 890U Series is equipped with Pro:Idiom™ MPEG4 technology, making the TVs compatible with most major VOD/PPV systems. You can offer your guests premium HDTV content from cable, satellite or video-on-demand services with no optional cards or external box needed.

Samsung LYNK™ HD content decryption DRM (IP/RF)

Samsung's software-based DRM technology is integrated into the entire Samsung Hotel TV line. Samsung LYNK™ offers a robust solution to unlock premium HDTV content from content providers such as cable, satellite and VOD providers, with maximum efficiency and security. IPTV-IP LYNK is available with REACH 4.0 and H-Browser 3.0.

Verimatrix™ HD content decryption DRM (IP)

IPTV-IP Multicast DRM is used in conjunction with Samsung LYNK™ REACH 4.0. In viewing IPTV channel reliable access to unlock premium HDTV content from content providers such as cable and satellite providers. IPTV-IP LYNK is available with REACH 4.0 and H-Browser 3.0.

Dimensions

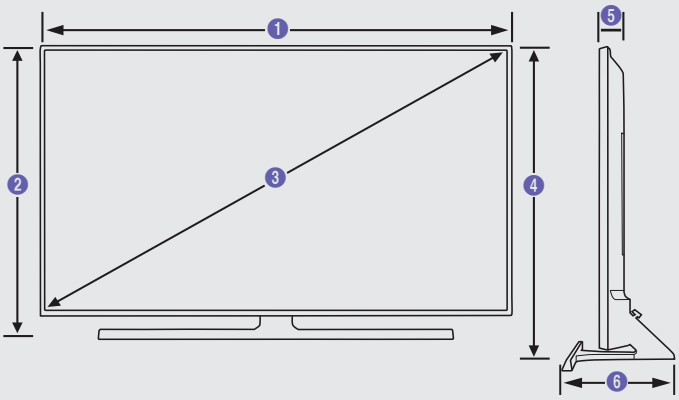

49" | HG49NE890UF - 2160P

1	2	3	4	5	6
43.3"	25.1"	49.0"	27.9"	2.2"	13.2"

55" | HG55NE890UF - 2160P

1	2	3	4	5	6
48.6"	28.2"	55.0"	31.0"	2.2"	13.2"

65" | HG65NE890UF - 2160P

1	2	3	4	5	6
57.3"	33.1"	65.0"	36.4"	2.1"	14.9"

Connectivity

HG49NE890UF / HG55NE890UF / HG65NE890UF

1. USB (5V 0.5A)
2. USB (HDD 1.0A / Cloning
3. Digital Audio Out (Optical)
4. HDMI In 1 (ARC)
5. HDMI In 2
6. Data
7. LAN
8. Component In / AV In
9. Antenna In

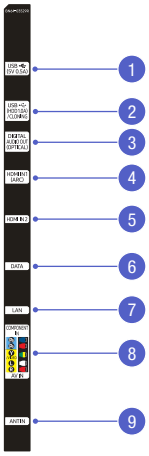

Samsung 890U Series
Hospitality TVs

Samsung 890U Series Hospitality TVs Key Specifications For complete product specifications, visit samsung.com/b2bhospitalitytvs

		HG49NE890UF	HG55NE890UF	HG65NE890UF
Display	Backlight	LED	LED	LED
	Screen Size (Diagonal)	49"	55"	65"
	UHD	UHD	UHD	UHD
	Resolution	3840 × 2160	3840 × 2160	3840 × 2160
Video	Picture Engine	UHD Up-Scaling	UHD Up-Scaling	UHD Up-Scaling
	Dynamic Contrast Ratio	Mega Contrast	Mega Contrast	Mega Contrast
	Viewing Angle (Horizontal/Vertical)	178/178	178/178	178/178
	Micro Dimming	UHD Dimming	UHD Dimming	UHD Dimming
	Active Crystal Color	Yes	Yes	Yes
	Auto Motion Plus	Yes	Yes	Yes
	Film Mode	Yes	Yes	Yes
Audio	Dolby Digital Plus	Yes	Yes	Yes
	DTS Codec	Yes	Yes	Yes
	Sound Output (RMS)	20W (L:10W, R:10W)	20W (L:10W, R:10W)	20W (L:10W, R:10W)
	Speaker Type	2CH (Down Firing w/Bass Reflex)	2CH (Down Firing w/Bass Reflex)	2CH (Down Firing w/Bass Reflex)
	Wall Mount Sound Mode	Yes	Yes	Yes
	TV SoundConnect	Yes	Yes	Yes
	BT Headset Support	Yes	Yes	Yes
SMART TV	Smart TV Type	Smart	Smart	Smart
	Apps Panel	Yes	Yes	Yes
	Web Browser	Yes	Yes	Yes
Features	Voice Control	Yes	Yes	Yes
	Mobile to TV - Mirroring, DLNA	Yes	Yes	Yes
	Samsung SMART View	Yes	Yes	Yes
	Processor	Quad Core	Quad Core	Quad Core
	Accessibility	Voice Guide / Enlarge / High Contrast	Voice Guide / Enlarge / High Contrast	Voice Guide / Enlarge / High Contrast
	Digital Clean View	Yes	Yes	Yes
	Auto Channel Search	Yes	Yes	Yes
	Auto Power Off	Yes	Yes	Yes
	BD Wise Plus	Yes	Yes	Yes
	Caption (Subtitle)	Yes	Yes	Yes
	ConnectShare™ (HDD)	Yes	Yes	Yes
	ConnectShare™ (USB 2.0)	Yes	Yes	Yes
	Sports Mode	Yes	Yes	Yes
	EPG	Yes	Yes	Yes
	Game Mode	Yes	Yes	Yes
	OSD Language	English, Spanish, French	English, Spanish, French	English, Spanish, French
	Picture-In-Picture	Yes	Yes	Yes
	BT HID Support	Yes	Yes	Yes
	USB HID Support	Yes	Yes	Yes
System	Digital Broadcasting	ATSC/Clear QAM	ATSC/Clear QAM	ATSC/Clear QAM
	Analog Tuner	Yes	Yes	Yes
Hospitality Features	Samsung LYNK™ SINC Compatibility	Yes	Yes	Yes
	Samsung LYNK™ HMS Compatibility	Yes	Yes	Yes
	H.Browser	Yes	Yes	Yes
	Samsung LYNK™ REACH (IP / RF)	REACH 4.0 / REACH 4.0	REACH 4.0 / REACH 4.0	REACH 4.0 / REACH 4.0
	Samsung LYNK™ REACH RF Modulator Compatibility	Yes	Yes	Yes
	Hospitality Home Menu	Home Menu 2015	Home Menu 2015	Home Menu 2015
	Bluetooth Music Player (Mobile → TV)	Yes	Yes	Yes
	Hospitality Plug&Play (Easy Setup)	Yes	Yes	Yes
	Auto Source Mode	Yes	Yes	Yes
	Power On Mode	Yes	Yes	Yes
	Hotel Channel List	Yes	Yes	Yes
	Channel Menu Display	Yes	Yes	Yes
	Mixed Channel List (ATSC, DVB-T/T2/C/S2, Analog)	Yes	Yes	Yes
	My Channel	Yes	Yes	Yes
	Energy Saving Mode (BLU Control)	Yes	Yes	Yes
	Logo Display with Timer Out Setting (BMP/Movie)	Yes	Yes	Yes
	Welcome Message	Yes	Yes	Yes
	RJ12 / IR Pass Through	Yes	Yes	Yes
	Clock Back Up Power Supply	Yes	Yes	Yes
	Software Clock	Yes	Yes	Yes
	Multi Code Remote Control	Yes	Yes	Yes
	Screwed Battery Cover	Yes	Yes	Yes
	Sound Bar Compatibility	Yes	Yes	Yes
	Music Mode (Input: PC/AV/Component/HDMI)	Yes	Yes	Yes
	Music Mode Backlight On/Off	Yes	Yes	Yes
	USB Cloning	Yes	Yes	Yes
	Smoovie Compatibility	Yes	Yes	Yes
	Soft AP	Yes	Yes	Yes
	On/Off Timer (Schedule)	Yes	Yes	Yes
	Wake-up Timer (Alarm)	Yes	Yes	Yes
	Samsung LYNK™ DRM	Yes	Yes	Yes
	Pro:Idiom	Yes	Yes	Yes
	Security Mode	Yes	Yes	Yes
	S/W EPG (Solution EPG)	Yes	Yes	Yes
	Wake on LAN (WOL)	Yes	Yes	Yes
Input & Output	HDMI	2/0	2/0	2/0
	USB	2/0	2/0	2/0
	Component In (Y/Pb/Pr)	1/0	1/0	1/0
	Composite In (AV)	1/0 (Common Use for Component Y)	1/0 (Common Use for Component Y)	1/0 (Common Use for Component Y)
	Ethernet (LAN)	1/0	1/0	1/0
	Digital Audio Out (Optical)	1/0	1/0	1/0
	RF In (Terrestrial / Cable input / Satellite Input)	1/0	1/0	1/0
	HDMI A / Return Ch. Support	Yes	Yes	Yes
	Wireless LAN Built-in	Yes	N/A	Yes
	Anynet+ (HDMI-CEC)	Yes	Yes	Yes
	RJ12	1/0	1/0	1/0
Design	Front Color	Silver	Silver	Silver
	Stand Type	Y-Shape	Y-Shape	Y-Shape
Dimensions (W x H x D)	Set Size without Stand - Speaker Side (WxHxD) (mm/in)	1099.4 x 638.7 x 55.3 / 43.3 x 25.1 x 2.2	1235.2 x 715.1 x 54.7 / 48.6 x 28.2 x 2.2	1456.1 x 840.4 x 54.4 / 57.3 x 33.1 x 2.1
	Set Size without Stand - Wall Mount Side (WxHxD) (mm/in)	1099.4 x 638.7 x 48.3 / 43.3 x 25.1 x 1.9	1235.2 x 715.1 x 48.3 / 48.6 x 28.2 x 1.9	1456.1 x 840.4 x 48.3 / 57.3 x 33.1 x 1.9
	Set Size with Stand (WxHxD) (mm/in)	1099.4 x 709.0 x 334.1 / 43.3 x 27.9 x 13.2	1235.2 x 786.7 x 334.1 / 48.6 x 31.0 x 13.2	1456.1 x 924.3 x 378.7 / 57.3 x 36.4 x 14.9
	Package Size (WxHxD) (mm/inch)	1275 x 733 x 163 / 50.2 x 28.9 x 6.4	1425 x 819 x 163 / 56.1 x 32.2 x 6.4	1625 x 947 x 185 / 64.0 x 37.3 x 7.3
Weight	Set Weight without Stand (kg / (bs)	14.0 / 30.9	16.9 / 37.3	23.2 / 51.1
	Set Weight with Stand (kg / lbs)	16.1 / 35.5	19.1 / 42.1	26.7 / 58.9
	Package Weight (kg / lbs)	21.4 / 47.2	25.4 / 56.0	34.6 / 76.3
Power	Power Supply (V)	AC110-120V 60Hz	AC110-120V 60Hz	AC110-120V 60Hz
Accessory	Remote Controller Model	TM1480A+TM1240A	TM1480A+TM1240A	TM1480A+TM1240A
	Batteries (for Remote Control)	Yes	Yes	Yes
	Samsung Smart Control (Included)	Yes	Yes	Yes
	Mini Wall Mount Support	Yes	Yes	Yes
	Vesa Wall Mount Support	Yes	Yes	Yes
	Power Cable	Yes	Yes	Yes
	Quick Install Guide	Yes	Yes	Yes
	Data Cable	Yes	Yes	Yes

Learn more samsung.com/business insights.samsung.com samsung.com/b2bhospitalitytvs

Product support 1-866-SAM4BIZ

Follow us youtube.com/samsungbizusa @SamsungBizUSA

SAMSUNG

©2016 Samsung Electronics America, Inc. Samsung is a registered mark of Samsung Electronics Corp., Ltd. Specifications and designs are subject to change without notice. Non-metric weights and measurements are approximate. All other brand, product, service names and logos are trademarks and/or registered trademarks of their respective manufacturers and companies. Simulated screen images. See samsung.com for detailed information. Printed in USA. HTV-890USERIESDSHT-DEC16T