DAILY REFERENCE
GUIDE

THANK YOU FOR BUYING A WHIRLPOOL PRODUCT.
In order to receive a more complete assistance, please register your appliance on:
www.whirlpool.eu/register

You can download the Safety Instructions and the Use and Care Guide, by visiting our website **http://docs.whirlpool.eu** and following the Instructions on the back of this booklet.

Before using the appliance carefully read Health and Safety guide.

PRODUCT DESCRIPTION

APPLIANCE

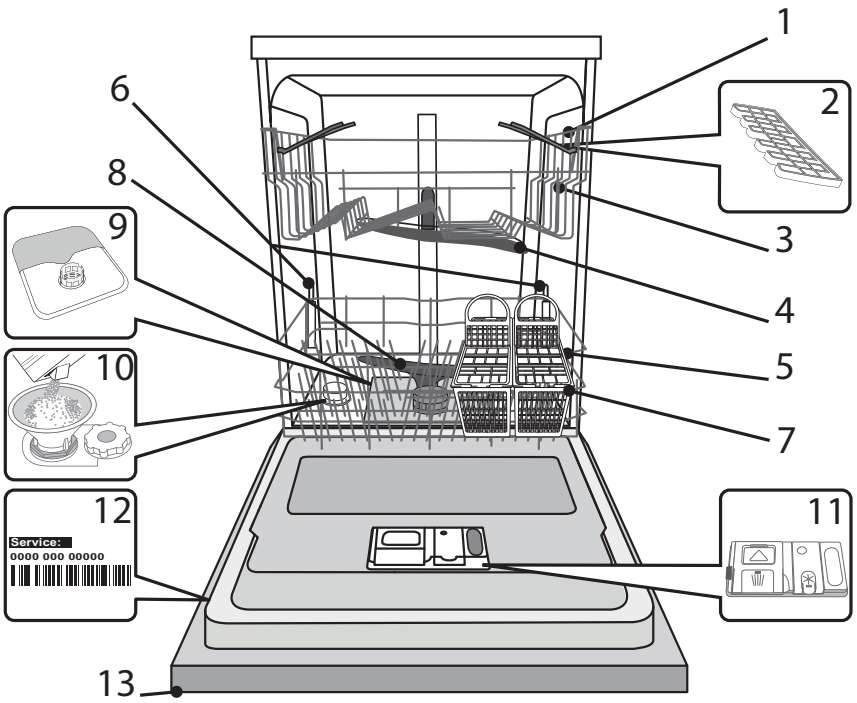

1.Upper rack
2. Foldable flaps
3.Upper rack height adjuster
4.Upper spray arm
5.Lower rack
6.Space Zone
7.Cutlery basket
8.Lower spray arm
9.Filter Assembly
10.Salt reservoir
11.Detergent and Rinse Aid dispensers
12.Rating plate
13.Control panel

CONTROL PANEL

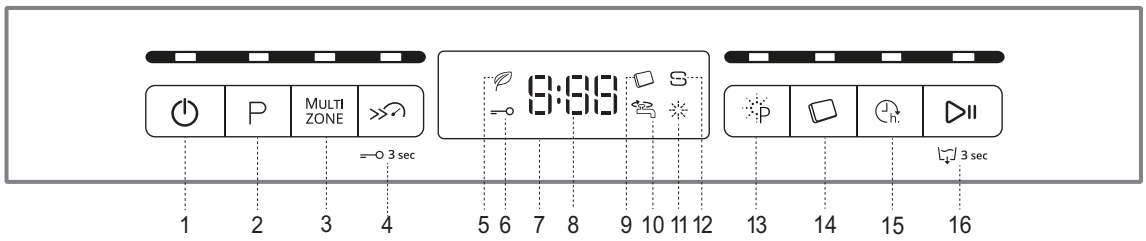

1. On-Off/Reset button with indicator light
2. Program selection button with indicator light
3. Multizone button with indicator light
4. Turbo button with indicator light / Key lock
5. Eco program indicator light
6. Key lock indicator light
7. Display
8. Program number and remaining time indicator
9. Tablet (Tab) indicator light
10. Closed water tap indicator light
11. Salt refill indicator light
12. Rinse Aid refill indicator light
13. Power Clean button with indicator light
14. Tablet button with indicator light
15. Delay button with indicator light
16. Start/Pause button with indicator light / Drain out

Whirlpool
SENSING THE DIFFERENCE

FIRST TIME USE
SALT, RINSE AID AND DETERGENT

ADVICE REGARDING THE FIRST TIME USE

After installation, remove the stoppers from the racks and the retaining elastic elements from the upper rack.

FILLING THE SALT RESERVOIR

The use of salt prevents the formation of LIMESCALE on the dishes and on the machine's functional components.

- It is important that the salt reservoir be never empty.
- It is important to set the water hardness.

The salt reservoir is located in the lower part of the dishwasher *(see PROGRAMS DESCRIPTION)* and should be filled when the **SALT REFILL indicator light** in the control panel is lit.

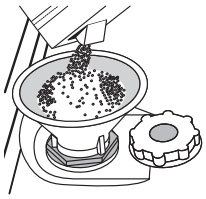

1.Remove the lower rack and unscrew the reservoir cap (anticlockwise).
2.Position the funnel *(see figure)* and fill the salt reservoir right up to its edge (approximately 1 kg); it is not unusual for a little water to leak out.
3.Remove the funnel and wipe any salt residue away from the opening.

Make sure the cap is screwed on tightly, so that no detergent can get into the container during the wash program (this could damage the water softener beyond repair).

Whenever you need to add salt, we recommend carrying out the procedure before the washing cycle is started.

SETTING THE WATER HARDNESS

To allow the water softener to work in a perfect way, it is essential that the water hardness setting is based on the actual water hardness in your house. This information can be obtained from your local water supplier.

The factory setting is for average (3) water hardness.

1. Switch on the appliance by pressing the **ON/OFF** button.
2. Switch off the appliance by pressing the **ON/OFF** button.
3. Hold down button **START/PAUSE** for 5 seconds, until you hear a beep.
4. Switch on the appliance by pressing the **ON/OFF** button.
5. The current selection level number and the salt indicator light both flash.
6. Press button **P** to select the desired hardness level *(see Water Hardness Table)*.

Water Hardness Table			
Level		**°dH** German degrees	**°fH** French degrees
1	Soft	0 - 6	0 - 10
2	Medium	7 - 11	11 - 20
3	Average	12 - 17	21 - 30
4	Hard	17 - 34	31 - 60
5	Very hard	35 - 50	61 - 90

7. Switch off the appliance by pressing the **ON/OFF** button.

Setting is complete!

As soon as this procedure is complete, run a program without loading.

Only use salt that has been specifically designed for dishwashers.

After the salt has been poured into the machine, the SALT REFILL indicator light switches off.

If the salt container is not filled, the water softener and the heating element may be damaged as a result.

FILLING THE RINSE AID DISPENSER

Rinse aid makes dish DRYING easier. The rinse aid dispenser **A** should be filled when the **RINSE AID REFILL indicator light** in the control panel is lit.

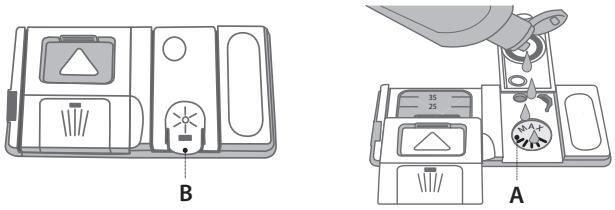

1. Open the dispenser **B** by pressing and pulling up the tab on the lid.
2. Carefully introduce the rinse aid as far as the maximum (110 ml) reference notch of the filling space - avoid spilling it. If this happens, clean the spill immediately with a dry cloth.
3. Press the lid down until you hear a click to close it.

NEVER pour the rinse aid directly into the tub.

ADJUSTING THE DOSAGE OF RINSE AID

If you are not completely satisfied with the drying results, you can adjust the quantity of rinse aid used.

- Switch the dishwasher on using the **ON/OFF** button.
- Switch it off using the **ON/OFF** button.
- Press button **START/PAUSE** three times - a beep will be heard.
- Switch it on using the **ON/OFF** button.
- The current selection level number and rinse aid indicator light flash.
- Press button **P** to select the level of rinse aid quantity to be supplied.
- Switch it off using the **ON/OFF** button

Setting is complete!

If the rinse aid level is set to 1(ECO), no rinse aid will be supplied. The LOW RINSE AID indicator light will not be lit if you run out of rinse aid.

A maximum of 4 levels can be set according to the dishwasher model. The factory setting is for a medium level.

- If you see bluish streaks on the dishes, set a low number (2-3).
- If there are drops of water or limescale marks on the dishes, set a high number (4-5).

FILLING THE DETERGENT DISPENSER

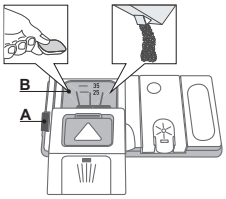

To open the detergent dispenser use the opening device A.

Introduce the detergent into the dry dispenser B only.

Place the amount of detergent for pre-washing directly inside the tub.

1.When measuring out the detergent refer to the *(see PROGRAMS TABLE)* to add the proper quantity. Compartment **B** comprises a level showing the maximum quantity of liquid or powder detergent that can be added to each cycle.

2. Remove detergent residues from the edges of the dispenser and close the cover until it clicks.
3. Close the lid of the detergent dispenser by pulling it up until the closing device is secured in place.

The detergent dispenser automatically opens up at the right time according to the program.

If all-in-one detergents are used, we recommend using the **TABLET** button, because it adjusts the program so that the best washing and drying results are always achieved.

PROGRAMS TABLE

Program			Drying phase	Available options *)	Detergent container		Duration of wash program (h:min)**)	Water consumption (litres/cycle)	Energy consumption (kWh/cycle)
					Tub	B			
1. Eco	ECO	50°	√		√	√	3:10	9.0	0.83
2. 6th Sense	6th sense	50°-60°	√	MULTI ZONE	√	√	1:25-3:00	7.0-14.0	0.9-1.40
3. Intensive		65°	√	MULTI ZONE	-	√	2:50	14.0	1.50
4. Daily		50°	√		-	√	1:30	12.0	1.15
5. Silent		50°	√		-	√	3:30	15.0	1.15
6. Rapid 30'		50°	-		-	√	0:30	9.0	0.50
7. Cristal		45°	√		-	√	1:40	11.0	1.10
8. PreWash		-	-		-	-	0:12	4.5	0.01
9. Sanitizing		65°	√		-	√	1:40	10.0	1.30
10. Self- Clean		65°	-		-	-	0:50	8.0	0.80

ECO program data is measured under laboratory conditions according to European Standard EN 50242.
**) Not all options can be used simultaneously.*
***) The duration of the program shown on the display or in the booklet is an estimate calculated on standard conditions. The actual time may vary depending on many factors such as temperature and pressure of the incoming water, room temperature, amount of detergent, quantity and type of load, load balancing, additional selected options and sensor calibration. The sensor calibration can increase program duration up to 20 min.*
Standby consumption: Left-on mode consumption: 5 W - Off mode consumption: 0.5 W

PROGRAMS DESCRIPTION

Instructions on wash cycle selection.

ECO
Normally soiled crockery. Standard program, the most efficient in terms of its combined energy and water consumption.

6th SENSE ®
For normally soiled dishes with dried food residues. Senses the level of soiling on the dishes and adjusts the program accordingly. When the sensor is detecting the soil level an animation appears in the display and the cycle duration is updated.

INTENSIVE
Program recommended for heavily soiled crockery, especially suitable for pans and saucepans (not to be used for delicate items).

DAILY
Normally soiled crockery. Everyday cycle, that ensures optimal cleaning performance in shorter time.

SILENT
Suitable for night-time operation of the appliance. Optimum performance ensured.

RAPID 30'
Program to be used for lightly-soiled dishes with no dried food residues. Ideal for 2 place settings.

CRISTAL
Cycle for delicate items, which are more sensitive to high temperatures, for example glasses and cups.

PRE-WASH
Crockery to be washed later. No detergent to be used with this program.

SANITIZING
Normally or heavily soiled crockery, with additional antibacterial wash.

SELF-CLEAN
Cycle to be used to perform maintenance of the dishwasher. It cleans the interior of the appliance using hot water.

Notes:
Optimum performance levels when using the "*1 Hour*" and "*Rapid*" programs can be achieved by observing the maximum amounts of specified place settings.
To reduce consumption even further, only run the dishwasher when it is full.

OPTIONS AND FUNCTIONS

OPTIONS can be selected directly by pressing the corresponding button *(see CONTROL PANEL)*.

If an option is not compatible with the selected program *see PROGRAMS TABLE*, **the corresponding LED flashes rapidly 3 times and beeps will sound. The option will not be enabled.**

MULTI ZONE

MULTIZONE

If there are not many dishes to be washed, a half loading may be used in order to save water, electricity and detergent.
Select the program and then press the MULTIZONE button: the indicator over the button lights up and the symbol of the chosen rack will appear on the display. By default the appliance washes dishes in all racks.
To wash only the specific rack, press this button repeatedly:


shown on the display (only lower rack)


shown on the display (only upper rack)


shown on the display (option is OFF and the appliance will wash dishes in all racks).

Remember to load the upper or lower rack only, and to reduce the amount of detergent accordingly.



TURBO

This option can be used to reduce the duration of the main programs while maintaining the same washing and drying performance levels.
After selecting the program, press the TURBO button and the indicator light will switch on. To deselect the option, press the same button again.



KEYLOCK

A long press (for 3 seconds) of TURBO button, will activate the KEYLOCK function. The KEYLOCK function will block the control panel except the ON/OFF button.
To deactivate the KEYLOCK, long press again.



WATER TAP CLOSED – Alarm

Flashes when there is no inlet water or water tap is closed.



POWER CLEAN

Thanks to the additional power jets this option provides a more intensive and powerful wash in the lower rack, in the specific area. This option is recommended for washing pots and casseroles. Press this button to activate Power Clean (the indicator lights up).



TABLET (Tab)

This setting allows you to optimize the performance of the program according to the type of detergent used.
Press the TABLET button (the indicator and corresponding symbol will light up) if you use combined detergents in tablet form (rinse aid, salt and detergent in 1 dose).

If you use powder or liquid detergent, this option should be off.



DELAY

The start of the program may be delayed for a period of time between 0:30 and 24 hours.
1.Select the program and any desired options. Press the DELAY button (repeatedly) to delay the start of the program. Adjustable from 0:30 to 24 hours. With each press of the button, the delay start increases by: 0:30 if selection below 4 hours, 1:00 if selection is below 12 hours, 4 hours if selection is above 12 hours. If 24 hours reached, and the button is pressed, the delayed start is deactivated.
2. Press the START/PAUSE button: the timer will begin counting down;
3. Once this time has elapsed, the indicator light switches off and the program begins automatically.
If at the time of the countdown the START/PAUSE button is pressed again the DELAY option is cancelled and the selected program starts automatically.

The DELAY function cannot be set once a program has been started.



DRAIN OUT

To stop and cancel the active cycle, the Drain Out function can be used.
A long press of START/PAUSE button, will activate the DRAIN OUT function. The active program will be stopped and the water in the dishwasher will be drained out.

WATER RECYCLING SYSTEM

This dishwasher allows you to save up to 3 litres of water using the Eco program.
Saved water is filtered and stored in a dedicated tank and will be reused for subsequent Eco program.
For hygienic reasons, if the Eco cycle is not used for three or more days it is strongly recommended to perform cleaning cycle of the dishwasher. It can be done using Self-Clean cycle (see program table).

DAILY USE

1. CHECK WATER CONNECTION

Check that the dishwasher is connected to the water supply and that the top is open.

2. SWITCH ON THE DISHWASHER

Press the **ON/OFF** button.

3. LOAD THE RACKS

(see LOADING THE RACKS)

4. FILLING THE DETERGENT DISPENSER

(see PROGRAMS TABLE).

5. CHOOSE THE PROGRAM AND CUSTOMISE THE CYCLE

Select the most appropriate program in accordance with the type of crockery and its soiling level *(see PROGRAMS DESCRIPTION)* by pressing the **P** button.

Select the desired options *(see OPTIONS AND FUNCTIONS)*.

6. START

Start the wash cycle by pressing the **START/PAUSE** button. When the program starts you hear a beep.

7. END OF WASH CYCLE

The end of the wash cycle is indicated by beeps and the display shows **END**. Open the door and switch off the appliance by pressing the **ON/OFF** button.

Wait for a few minutes before removing the crockery - to avoid burns. Unload the racks, beginning with the lower one.

After the program completion the additional drying phase can be occurs for further 30 min. You can unload the dishwasher in any time after the program is completed. To ensure better drying effect we recommend to let it run for 30 min.

The machine will switch off automatically during certain extended periods of inactivity, in order to minimise electricity consumption. If the crockery is only lightly soiled or if it has been rinsed with water before being placed in the dishwasher, reduce the amount of detergent used accordingly.

MODIFYING A RUNNING PROGRAM

If a wrong program was selected, it is possible to change it, provided that it has only just begun: press and hold the **ON/OFF** button, the machine will switch off.

Switch the machine back on using the **ON/OFF** button and select the new wash cycle and any desired options; start the cycle by pressing the **START/PAUSE** button.

ADDING EXTRA CROCKERY

Without switching off the machine, open the door **(be ware of HOT steam!)** and place the crockery inside the dishwasher. Close the door and press the **START/PAUSE** button the cycle will begin from the point at which it was interrupted.

ACCIDENTAL INTERRUPTIONS

If the door is opened during the wash cycle, or if there is a power cut, the cycle stops. Once the door has been closed or the electricity supply is restored, to start again the cycle from where it was interrupted, press the **START/PAUSE** button.

For more information about the functions, you can request or download from the WEB a Use & Care Guide by following the instructions on the last page. *www*

ADVICE AND TIPS

TIPS

Before loading the baskets, remove all food residues from the crockery and empty the glasses. **You do not need to rinse beforehand under running water.**

Arrange the crockery so that it is held in place firmly and does not tip over; and arrange the containers with the openings facing downwards and the concave/convex parts placed obliquely, thus allowing the water to reach every surface and flow freely.

Warning: lids, handles, trays and frying pans do not prevent the sprayer arms from rotating.

Place any small items in the cutlery basket.

Very soiled dishes and pans should be placed in the lower basket because in this sector the water sprays are stronger and allow a higher washing performance.

After loading the appliance, make sure that the sprayer arms can rotate freely.

HYGIENE

To avoid odour and sediment which can be accumulated in the dishwasher please run a high temperature program at least one a month. Use a tea spoon of detergent and run it without the loading to clean your appliance.

UNSUITABLE CROCKERY

- Wooden crockery and cutlery.
- Delicate decorated glasses, artistic handicraft and antique crockery. Their decorations are not resistant.
- Parts in synthetic material which do not withstand high temperatures.
- Copper and tin crockery.
- Crockery soiled with ash, wax, lubricating grease or ink.

The colours of glass decorations and aluminium/silver pieces can change and fade during the washing process. Some types of glass (e.g. crystal objects) can become opaque after a number of wash cycles too.

DAMAGE TO GLASS AND CROCKERY

- Only use glasses and porcelain guaranteed by the manufacturer as dishwasher safe.
- Use a delicate detergent suitable for crockery
- Collect glasses and cutlery from the dishwasher as soon as the wash cycle is over.

LOADING THE RACKS

UPPER RACK

Load delicate and light dishes: glasses, cups, saucers, low salad bowls.

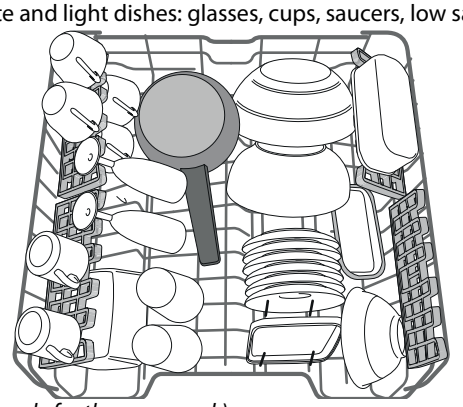

(loading example for the upper rack)

ADJUSTING THE HEIGHT OF THE UPPER RACK

The height of the upper rack can be adjusted: high position to place bulky crockery in the lower basket and low position to make the most of the tip-up supports by creating more space upwards and avoid collision with the items loaded into lower rack.

The upper rack is equipped with a **Upper Rack height adjuster** *(see figure)*, without pressing the levers, lift it up by simply holding the rack sides, as soon as the rack is stable in its upper position.

To restore to the lower position, press the levers **A** at the sides of the rack and move the basket downwards.

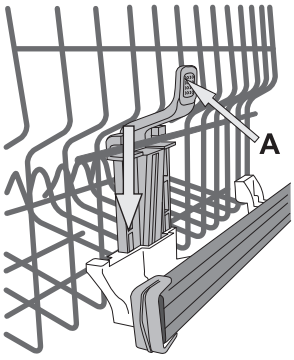

We strongly recommend that you do not adjust the height of the rack when it is loaded.
NEVER raise or lower the basket on one side only.

FOLDABLE FLAPS WITH ADJUSTABLE POSITION

The side foldable flaps can be positioned at three different heights to optimize the arrangement of crockery inside the rack.

Wine glasses can be placed safely in the foldable flaps by inserting the stem of each glass into the corresponding slots.

For optimum drying results incline the foldable flaps more. To change the inclination, pull up the foldable flap, slide it slightly and position it as you wish.

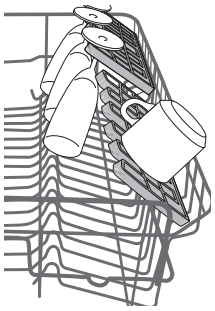

LOWER RACK

For pots, lids, plates, salad bowls, cutlery etc. Large plates and lids should ideally be placed at the sides to avoid interferences with the spray arm.

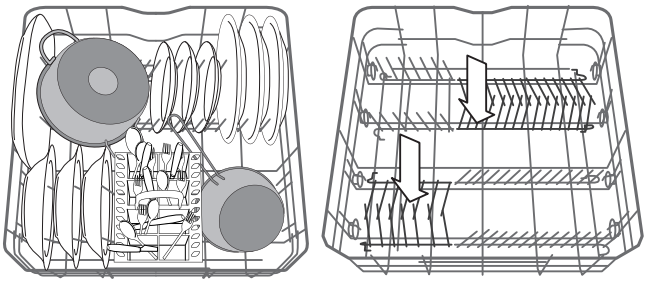

(loading example for the lower rack)

The lower rack has tip-up supports which can be used in a vertical position when arranging plates or in a horizontal position (lower) to load pans and salad bowls easily.

CUTLERY BASKET

The modular basket can slide to optimise the space inside the lower rack. It is equipped with top grilles for improved cutlery arrangement.

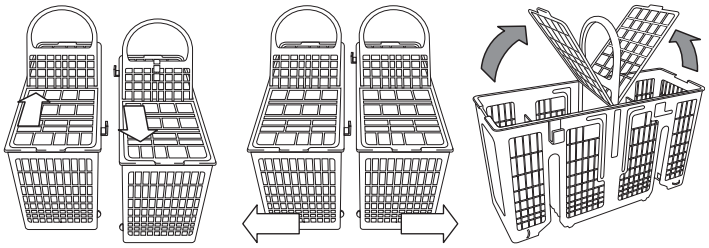

Knives and other utensils with sharp edges must be placed in the cutlery basket with the points facing downwards or they must be positioned horizontally in the tip-up compartments on the upper rack.

POWER CLEAN IN LOWER RACK

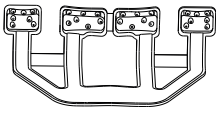

Power Clean® uses the special water jets in the rear of cavity to wash more intensively the high dirty items. The lower rack has a **Space Zone**, a special pull-out support in the rear of the rack that can be used to support frying pans or baking pans in upright position, thus taking up less space. Placing the pots/casseroles faced to the Power Clean® component please activate the **POWER CLEAN** on the panel.

How to use Power Clean®:

1. Adjust the Power Clean® area **G** folding down the rear plate holders to load pots.
2. Load pots and casseroles inclined vertically in Power Clean® area. Pots have to be inclined towards the power water jets.

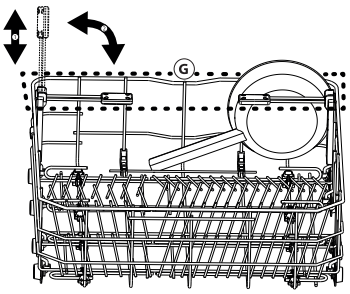

Whirlpool
SENSING THE DIFFERENCE

CARE AND MAINTENANCE

CLEANING THE FILTER ASSEMBLY

Regularly clean the filter assembly so that the filters do not clog and that the waste water flows away correctly.
The filter assembly consists of three filters which remove food residues from the washing water and then recirculate the water: to obtain the best washing results, you need to keep them clean.
The dishwasher must not be used without filters or if the filter is loose.
After several washes, check the filter assembly and if necessary clean it thoroughly under running water, using a non-metallic brush and following the instructions below:

1. Turn the cylindrical filter **A** in an anti-clockwise direction and pull it out *(Fig 1)*.
2. Remove the cup filter **B** by exerting a slight pressure on the side flaps *(Fig 2)*.
3. Slide out the stainless-steel plate filter **C** *(Fig 3)*.
4. Inspect the trap and remove any food residues.

NEVER REMOVE the wash-cycle pump protection (black detail) *(Fig 4)*.

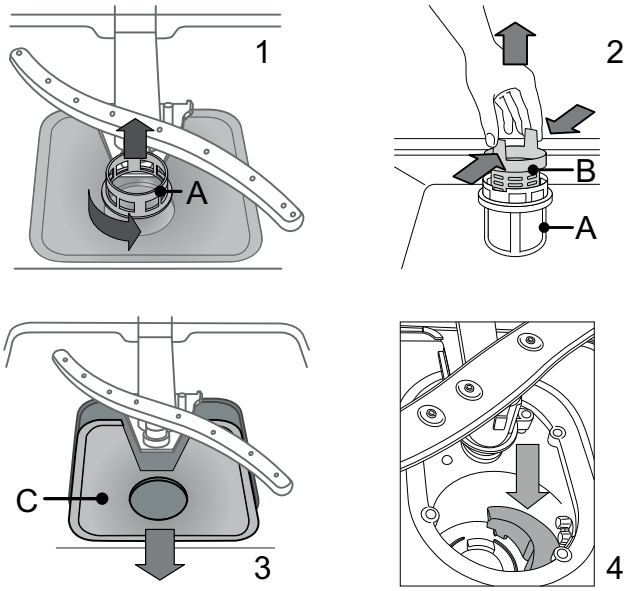

After cleaning the filters, re-place the filter assembly and fix it in position correctly; this is essential for maintaining the efficient operation of the dishwasher.

CLEANING THE SPRAY ARMS

On occasions, food residue may become encrusted onto the spray arms and block the holes used to spray the water. It is therefore recommended that you check the arms from time to time and clean them with a small non-metallic brush.

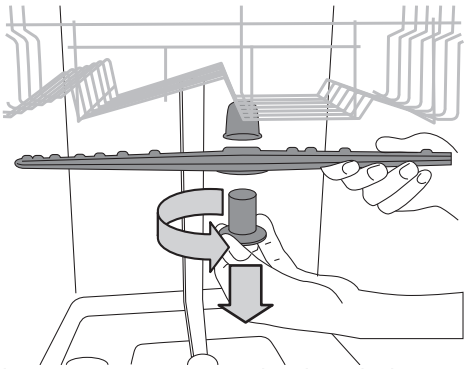

To remove the upper spray arm, turn the plastic locking ring in an anti-clockwise direction. The upper spray arm should be replaced so that the side with the greater number of holes is facing upwards.

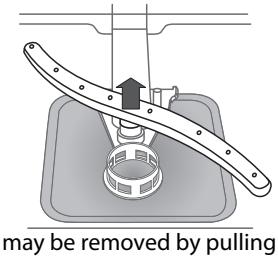

The lower spray arm may be removed by pulling it upwards.

CLEANING THE WATER INLET HOSE

If the water hoses are new or have not been used for an extended period of time, let the water run to make sure it is clear and free of impurities before performing the necessary connections. If this precaution is not taken, the water inlet could become blocked and damage the dishwasher.

TROUBLESHOOTING

Your dishwasher may not work properly.
Before contacting the Service Centre check if the problem can be solved by going through the following list.

PROBLEMS	POSSIBLE CAUSES	SOLUTIONS
The dishwasher won't start or does not respond to commands.	The appliance has not been plugged in properly.	Insert the plug into the socket.
	Power outage.	The dishwasher starts automatically when the power returns.
	The dishwasher door is not closed.	Vigorously push the door until you hear the "*click*".
	It does not respond to commands.	Switch off the appliance by pressing the **ON/OFF** button, switch it back on after approximately one minute and reset the program.
The dishwasher won't drain.	The wash cycle has not finished yet.	Wait until the wash cycle finishes.
	The drain hose is bent.	Check that the drain hose is not bent *(see INSTALATION INSTRUCTION)*.
	The sink drain pipe is blocked.	Clean the sink drain pipe.
	The filter is clogged up with food residues	Clean the filter *(see CLEANING THE FILTER ASSEMBLY)*.
The dishwasher makes excessive noise.	The dishes are rattling against each.	Arrange the crockery correctly *(see LOADING THE RACKS)*.
	An excessive amount of foam has been produced.	The detergent has not been measured out correctly or it is not suitable for use in dishwashers *(see FILLING THE DETERGENT DISPENSER)*. Reset dishwasher by pressing the DRAIN button *(see OPTIONS AND FUNCTIONS)* and run new program without detergent.
The dishes are not clean.	The crockery has not been arranged properly.	Arrange the crockery correctly *(see LOADING THE RACKS)*.
	The spray arms cannot rotate freely, being hindered by the dishes.	Arrange the crockery correctly *(see LOADING THE RACKS)*.
	The wash cycle is too gentle.	Select an appropriate wash cycle *(see PROGRAMS TABLE)*.
	An excessive amount of foam has been produced.	The detergent has not been measured out correctly or it is not suitable for use in dishwashers *(see FILLING THE DETERGENT DISPENSER)*.
	The cap on the rinse aid compartment has not been shut correctly.	Make sure the cap of the rinse aid dispenser is closed.
	The filter is soiled or clogged.	Clean the filter assembly *(see CARE AND MAINTENANCE)*.
	There is no salt.	Fill the salt reservoir *(see FILLING THE SALT RESERVOIR)*.

MAINTENANCE AND TROUBLESHOOTING GUIDE

For more information, maintenance procedures and troubleshooting, see the ***Use and Care Guide***.
The ***Use and Care Guide*** can be obtained by:
• After-Sales Service; phone number see in warranty booklet.
• download from website: **http://docs.whirlpool.eu**
• use QR code:

TECHNICAL DATASHEET

The technical data containing the energy consumption data can be downloaded from the website:
http://docs.whirlpool.eu

CONTACTING AFTER-SALES SERVICE

When you contact the After-Sales Service, you must provide the codes shown on the rating plate attached to the left or right side inside the door of the dishwasher. The phone number is listed in the warranty booklet or on the website:
http://www.whirlpool.eu

