Eonis

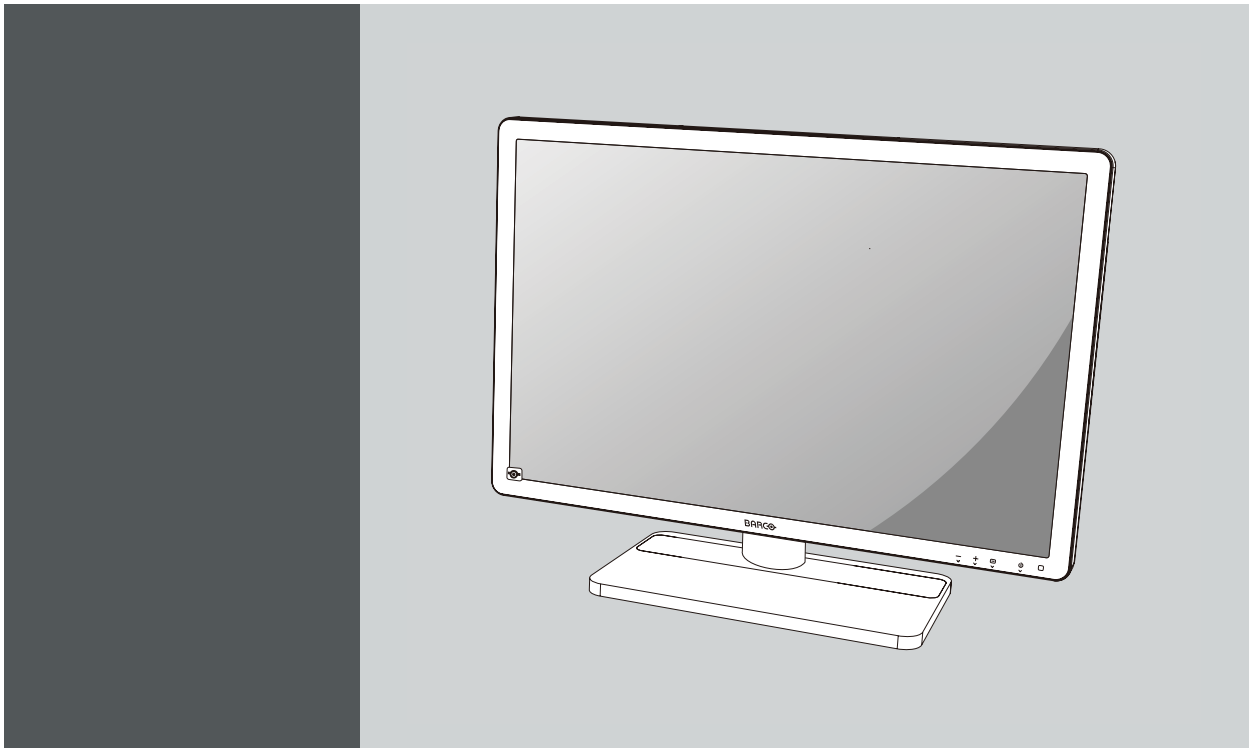

User Guide
24-inch clinical display

MDRC-2224

K5903081/06
19/12/2016

BARCO

Visibly yours

Barco NV
President Kennedypark 35, 8500 Kortrijk, Belgium
Phone: +32 56.23.32.11
Fax: +32 56.26.22.62
Support: www.barco.com/en/support
Visit us at the web: www.barco.com

Printed in Belgium

TABLE OF CONTENTS

1. Welcome! 3
1.1 About the product 3
1.2 What's in the box 4

2. Parts, controls and connectors 5
2.1 Front view 5
2.2 Rear view 6

3. Display installation 7
3.1 Adjusting the display position 7
3.2 Removing the cover 7
3.3 Connecting the cables 8
3.4 Re-attaching the cover 9
3.5 Routing the cables 9
3.6 Kensington security slots 9
3.7 VESA-mount installation 10

4. Daily operation 13
4.1 Recommendations for daily operation 13
4.2 On/Off switching 14
4.3 Bringing up the OSD menus 14
4.4 Navigating through the OSD menus 14

5. Advanced operation 15
5.1 Video input source selection 15
5.2 Luminance adjustment 15
5.3 Gamma selection 15
5.4 Ambient light reading room selection 16
5.5 White point selection 16
5.6 Analog video settings 17
5.7 OSD menu language 17
5.8 Power status LED 18
5.9 DPMS mode 18
5.10 Self calibration frequency 18
5.11 Factory reset 19

6. Maintenance 21
6.1 Cleaning instructions 21

7. Important information 23
7.1 Safety information 23
7.2 Environmental information 25
7.3 Regulatory compliance information 28
7.4 EMC notice 28
7.5 Explanation of symbols 32
7.6 Legal disclaimer 34
7.7 Technical specifications 35

A. Troubleshooting 37
A.1 Troubleshooting 37
A.2 Warning signals 37

1. WELCOME!

1.1 About the product

Consistent image quality

The Eonis display presents crisp, razor-sharp, high-contrast images. To guarantee image consistency at all times, it features a unique front sensor that automatically aligns image quality every time the display is turned on. This image consistency enhances collaboration: images always appear exactly like they are supposed to, on every display, which spurs confident clinical decisions. Furthermore, specialists looking at X-ray images will appreciate the built-in DICOM settings.

One-click quality assurance

Like Barco's entire medical display range, the Eonis display line comes with Barco's online MediCal QAWeb service for quality assurance and remote asset management. Proving its superior value in hospitals around the world, MediCal QAWeb provides automated quality assurance checks and detailed reports. It makes it easy for healthcare IT to centrally and remotely manage and configure displays across the healthcare organization. Also for private practices, QAWeb further strengthens image consistency and allows you to easily personalize your image.

Fully cleanable and smart design

The Eonis display carries all safety certifications required in clinical environments. It features an integrated cable management system, making it safe to use in hospitals and private practices. The multiple mounting options and connections further add to the smart design typical of Barco's Eonis display. Most unique, however, is the excellent cleanability of the WP version of the display thanks to the toughened and scratch-proof glass. This display model can be disinfected, both front and back, with typical alcohol-based cleaning agents.

Features

- Front sensor automatically aligns image quality
- IPS panel ensures wide viewing angle
- MediCal QAWeb suite for networked quality assurance, calibration and asset management all add to the exceptional, consistent image quality of the Eonis display
- Toughened, scratch-proof front glass (WP version only)
- Covered cables
- Medical-grade certifications
- Sockets for Kensington lock makes the Eonis display safe for use in clinical environments
- Flexible VESA mount for arm mounting
- Top connections for easy and secure connections
- Multiple inputs (HDMI, DisplayPort, USB, etc.) ensure the display's flexible deployment

This manual further guides you through the different steps needed to install and use the Eonis display.



CAUTION: Read all the important safety information before installing and operating your Eonis display. Please refer to the dedicated chapter in this user guide.

1.2 What's in the box

Overview

Your Eonis comes with:

- this Eonis user guide
- a documentation CD containing multilingual user documentation
- a system CD containing MediCal QAWeb Agent
- a (set of) AC power cord(s) (depending on the region of operation)
- a HDMI cable
- a DP cable
- a USB cable
- an external power supply
- a velcro cable routing strap



Keep your original packaging. It is designed for this display and is the ideal protection during transport and storage.

2. PARTS, CONTROLS AND CONNECTORS

2.1 Front view

Overview

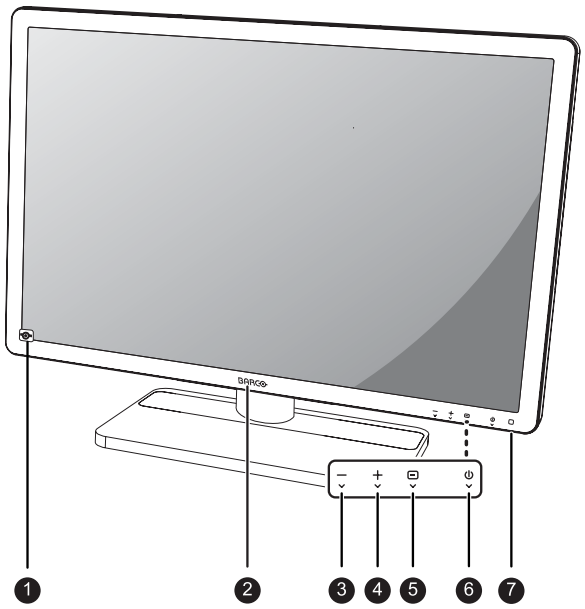

Image 2-1

1. Front sensor
2. USB downstream connector
3. Left / Decrease key
4. Right / Increase key
5. Menu / Enter key
6. Standby key
7. Power status LED

2.2 Rear view

Overview

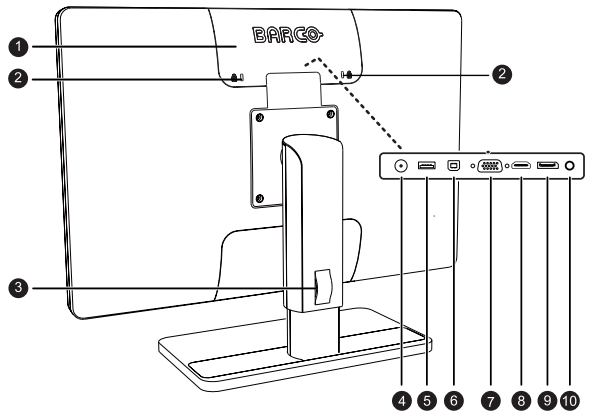

Image 2-2

1. Connector compartment cover
2. Kensington security slots
3. Opening for cable routing strap
4. +12 VDC (⎓) power input
5. USB downstream connector
6. USB upstream connector
7. VGA input
8. HDMI input
9. DisplayPort input
10. HDMI audio line out

3. DISPLAY INSTALLATION

3.1 Adjusting the display position

To adjust the display position

You can now safely pivot, tilt, swivel, raise and lower your display as desired.

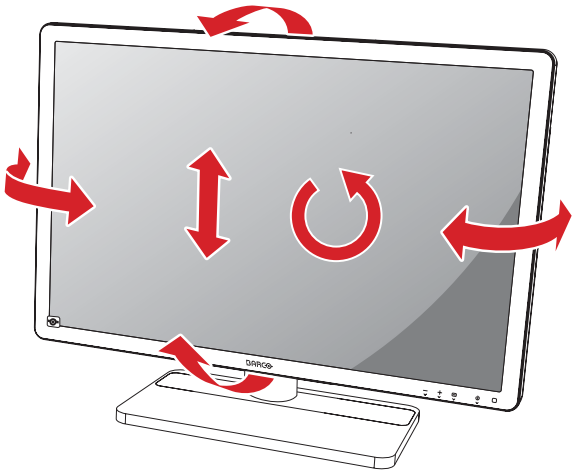

Image 3-1

The standard orientation of the video input is landscape. If you use the display in portrait mode, make sure you change the orientation of the video input via the screen settings of the computer.

WARNING: The display must be in its highest position before it can be properly pivoted.

3.2 Removing the cover

To remove the connector compartment cover

The connector compartment cover should be removed to get access to the connectors. To remove the cover, gently slide the connector compartment cover upwards and remove it from the display.

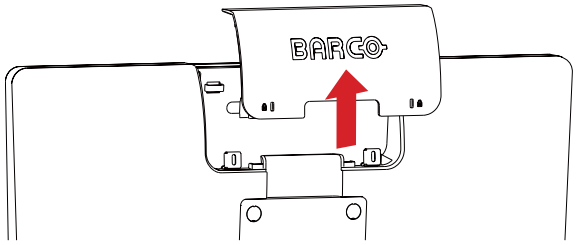

Image 3-2

3.3 Connecting the cables

To connect the cables

1. Connect one or more of the video input connections of your display (VGA, HDMI or DisplayPort) to the corresponding video outputs on your computer or any other video device.
2. If you want to make use of the display's USB downstream connectors, then connect your workstation with the display's USB upstream connector by means of the supplied USB cable.
3. Connect a speaker, amplifier, ... with the display's audio line out if you want to use the internal sound option of your display.
4. Connect the supplied external DC (⎓) power supply to the +12 VDC power input of your display.
5. Plug the other end of the external DC (⎓) power supply into a **grounded** power outlet by means of the proper power cord delivered with your display.

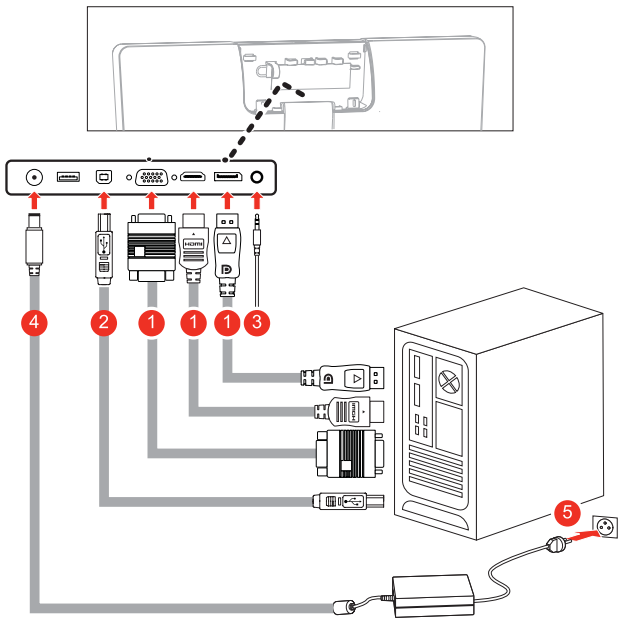

Image 3-3

For the MDRC-2224 WP, there is a earth stud available in the connector compartment.

3.4 Re-attaching the cover

To re-attach the connector compartment cover

Put the cover back in position by sliding it downwards so that it is fixed to the display again.

Pay attention that all cables stay in the cable channel while re-attaching the cover.

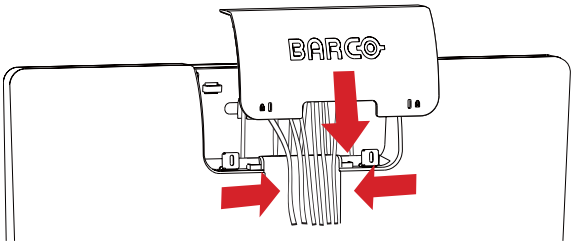

Image 3-4

3.5 Routing the cables

To route the cables

1. Slide the cable routing strap through the opening in the back of the stand.
2. Bundle all cables together so that they will fit in the strap.
3. Wrap and fix the cable routing strap around all cables.

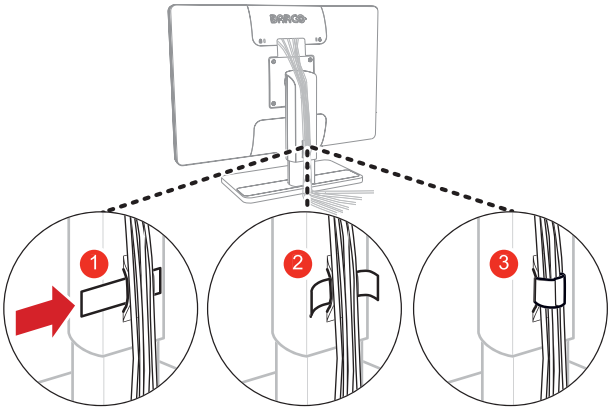

Image 3-5

3.6 Kensington security slots

To make use of the Kensington security slots

Your Eonis display has 2 Kensington slots available which allow you to secure the display to a desk or any other fixed object. Moreover, when locking the display with the connector compartment cover attached, you also prevent users from connecting/disconnecting any cables to/from the display.

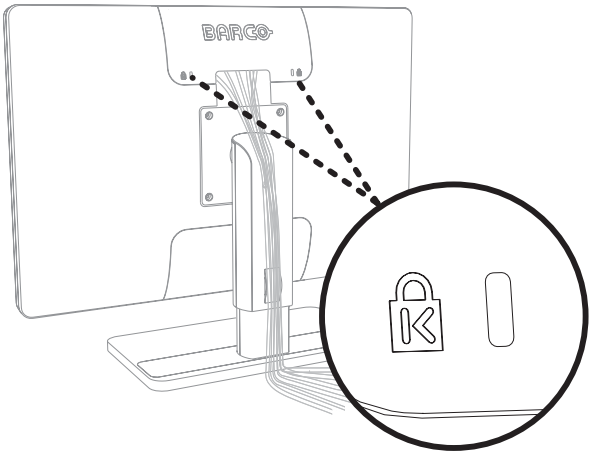

Image 3-6

3.7 VESA-mount installation

To mount the display on a VESA arm

The display panel, standard attached to a stand, is compatible with the VESA 100 mm standard.

1. Put the display face down on a clean and soft surface. Be careful not to damage the panel screen.
2. Unscrew the four fixation screws to detach the panel from the stand.
3. Use 4 M4 screws to attach the panel to a VESA approved arm. Please make sure that the length of the screws is 10 mm + VESA plate thickness (tolerance of +/- 0.5 mm).

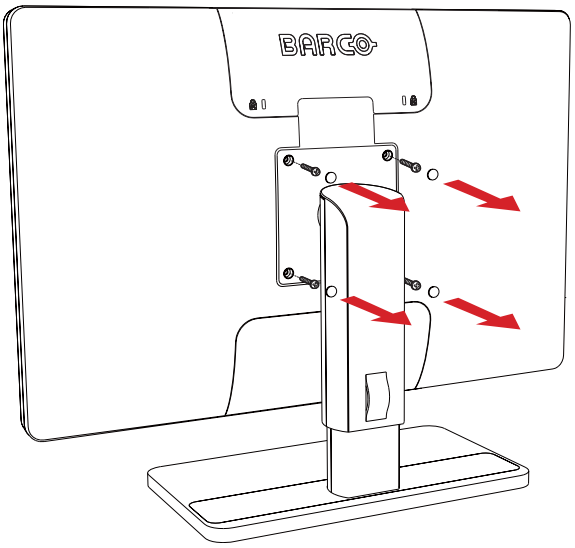

Image 3-7

CAUTION: Use an arm that can support a weight of at least 12 kg (26.50 lbs). Failure to do so could make the panel fall, causing serious injury to a child or adult, and serious damage to the equipment.

CAUTION: Never move a display attached to an arm by pulling or pushing the display itself. Instead, make sure that the arm is equipped with a VESA approved handle and use this to move the display. Please refer to the instruction manual of the arm for more information and instructions.



CAUTION: Use suitable mounting apparatus to avoid risk of injury.

4. DAILY OPERATION

4.1 Recommendations for daily operation

Optimize the lifetime of your display

Enabling the Display Power Management System (DPMS) of your display will optimize its lifetime by automatically switching off the backlight when the display is not used for a specified period of time. By default, DPMS is enabled on your display, but it also needs to be activated on your workstation. To do this, go to “Power Options Properties” in the “Control Panel”.



Barco recommends setting DPMS activation after 20 minutes of non-usage.

Use a screen saver to avoid image retention

Prolonged operation of an LCD with the same content on the same screen area may result in a form of image retention.

You can avoid or significantly reduce the occurrence of this phenomenon by using a screen saver. You can activate a screen saver in the “Display properties” window of your workstation.



Barco recommends setting screen saver activation after 5 minutes of non-usage. A good screen saver displays moving content.

In case you are working with the same image or an application with static image elements for several hours continuously (so that the screen saver is not activated), change the image content regularly to avoid image retention of the static elements.

Understand pixel technology

LCD displays use technology based on pixels. As a normal tolerance in the manufacturing of the LCD, a limited number of these pixels may remain either dark or permanently lit, without affecting the performance of the product. To ensure optimal product quality, Barco applies strict selection criteria for its LCD panels.



To learn more about LCD technology and missing pixels, consult the dedicated white papers available at www.barco.com/healthcare.

Maximize quality assurance

QAWeb guarantees optimum and stabilized image quality in every private practice.

The front sensor on the Eonis works seamlessly with QAWeb to ensure a consistent image over time. It automatically stabilizes the image from the moment you switch on the display. What’s more, QAWeb provides you with instant feedback on the status of the display.

4.2 On/Off switching

To switch your display on or off

1. Shortly press the Standby (⏻) key.

4.3 Bringing up the OSD menus

About the OSD menu

The OSD menu allows you to configure different settings to make your Eonis display fit your needs within your working environment. Also, you can retrieve general information about your display and its current configuration settings through the OSD menu.

To bring up the OSD menu

1. While the display is switched on, press the Menu/Enter (▣) key.
   As a result, the OSD main menu comes up in the middle of the screen. If no further actions are taken within the following 10 seconds however, the OSD menu will disappear again.

4.4 Navigating through the OSD menus

To navigate through the OSD menus

1. Use the Right/Down (+) and Left/Up (−) keys to move through the (sub)menus, change values or make selections.
2. To go into a submenu or confirm adjustments and selections, use the Menu/Enter (▣) key.

5. ADVANCED OPERATION

5.1 Video input source selection

About video input source selection

By default, your Eonis display automatically detects and shows the connected video input source. However, when for instance more then one video input source is connected, it may be needed to manually select the input source to be displayed.

The available video input source selections for your display are:

- *Auto*: This is the default setting and will automatically detect and display the connected video input source.
- *HDMI*: This setting will display the video connected to the HDMI input.
- *DisplayPort*: This setting will display the video connected to the DisplayPort input.
- *VGA*: This setting will display the video connected to the VGA input.

To select a video input source

1. Bring up the OSD main menu.
2. Navigate to the *Input Selection* menu.
3. Select one of the available video input sources.

5.2 Luminance adjustment

About luminance adjustment

The luminance of your Eonis display is adjustable over a predefined range. When you change the luminance, the display will adjust its backlight to reach the target.

To adjust the luminance

1. Bring up the OSD main menu.
2. Navigate to the *Adjustments* menu.
3. Enter the *Luminance* submenu.
4. Set a luminance value as desired and confirm.

5.3 Gamma selection

About gamma selection

Native, uncorrected panels will display all grayscale/color levels with equal luminance increments. Studies have shown however, that in medical images certain grayscale/color parts contain more relevant information than others. To respond to these conclusions, gamma functions have been defined. These functions emphasize on these parts containing crucial information by correcting the native panel behavior.

The available gamma functions for your display are:

- *Native*: If you select *Native*, the native panel behavior will not be corrected.
- *sRGB*: This is the display function as defined in the sRGB specification and is designed to match typical home and office viewing conditions. It is widely used in most computer applications.
- *DICOM*: DICOM (Digital Imaging and Communications in Medicine) is an international standard that was developed to improve the quality and communication of digital images in radiology. In short, the DICOM gamma function results in more visible grayscales in the images. Barco recommends selecting the *DICOM* gamma function for most medical viewing applications.
- *Gamma 2.2*: Select this function in case the display is to replace a CRT display with a gamma of 2.2.
- *QAWeb*: This gamma function will be automatically selected when gamma functions are defined by MediCal QAWeb.

The settings of the display must be adapted to suit the requirements of the visualization software. In case of doubt, please contact the vendor of the visualization software.

To select a gamma function

1. Bring up the OSD main menu.
2. Navigate to the *Adjustments* menu.
3. Enter the *Gamma* submenu.
4. Select one of the available gamma functions.

5.4 Ambient light reading room selection

About ambient light reading rooms

The available ambient light reading rooms for your display are:

- *Dark Room*: Corresponds to light conditions in dark diagnostic reading rooms. This setting has the lowest maximum ambient light.
- *Office*: Corresponds to light conditions in office rooms.
- *Operation Room*: Corresponds to light conditions in operating rooms. This setting has the highest maximum ambient light.
- *QAWeb*: This setting will be automatically selected when ambient light conditions are defined by MediCal QAWeb.

To select an ambient light reading room

1. Bring up the OSD main menu.
2. Navigate to the *Adjustments* menu.
3. Enter the *Ambient Light* submenu.
4. Select one of the available reading rooms and confirm.

5.5 White point selection

About white point selection

This setting allows you to modify the display white point, used as reference for all other colors to be displayed.

The available white point settings for your display are:

- *Native*: The native, unmodified color temperature of the LCD panel.
- *6500K (sRGB)*: Corresponds to a color temperature of 6500 Kelvin (D65).
- *QAWeb*: This white point setting will be automatically selected when white point is defined by MediCal QAWeb.

To select the white point

1. Bring up the OSD main menu.
2. Navigate to the *Adjustments* menu.
3. Enter the *White Point* submenu.
4. Select one of the available white point presets.

5.6 Analog video settings

The following settings are only available when VGA video input source is selected.

About analog video settings

When the VGA video input source is active, a number of analog video settings will become available:

- *Auto Adjust*: The analog video setting will automatically be adjusted
- *Geometry*: Allows to manually adjust the geometry settings of the analog video (clock frequency, clock phase, horizontal position, vertical position)
- *Level*: Allows to manually adjust the contrast and brightness levels of the analog video

To adjust the analog video settings

1. Bring up the OSD main menu.
2. Navigate to the *Adjustments* menu.
3. Enter the *Analog* submenu.
4. Adjust one of the available analog video settings as desired.

5.7 OSD menu language

About the OSD menu language

By default, the OSD menu comes up in English. However, there's a wide range of other languages available for the OSD menu of your Eonis display.

To select the language of the OSD menu:

1. Bring up the OSD main menu.
2. Navigate to the *Adjustments* > *Settings* menu.
3. Enter the *Language* submenu.
4. Select one of the available languages.

5.8 Power status LED

About the power status LED

By default, the power status LED has the following behavior:

- **Green:** Display is on
- **Blinking green:** Display is entering standby power-saving mode
- **Orange:** Display is in standby power-saving mode
- **Off:** Display is disconnected from the mains power

This default behavior can be changed so that the power status LED is also off when the display is on or when the display is entering standby power-saving mode.

To change the behavior of the power status LED:

1. Bring up the OSD main menu.
2. Navigate to the *Adjustments* > *Settings* menu.
3. Enter the *Power Status LED* submenu.
4. Change the behavior of the power status LED as desired and confirm.



The orange standby power-saving state of the LED is not influenced by this setting. So, when the display is in standby power-saving mode, the LED will turn orange, even if it was switched off by this setting.

5.9 DPMS mode

About DPMS mode

Enabling the Display Power Management System (DPMS) mode on your Eonis display will optimize the displays' lifetime by automatically switching off the backlight when no video signal is detected for approximately 10 seconds. The power status LED will then turn orange.

To enable/disable DPMS mode

1. Bring up the OSD main menu.
2. Navigate to the *Adjustments* > *Settings* > *Power Save* menu.
3. Enter the *DPMS* submenu.
4. Select *On* or *Off* as desired and confirm.

5.10 Self calibration frequency

About self calibration

The front sensor of your Eonis display measures the output luminance of your screen and allows the display to automatically stabilize its luminance for maximum image quality over the displays' lifetime. This self calibration is done at an adjustable, predefined frequency:

- *1 min*
- *1 hr*
- *6 hr*
- *24 hr*
- *Never*
- *QAWeb*: This setting will be automatically selected when the self calibration frequency is defined by MediCal QAWeb.

To adjust the self calibration frequency

1. Bring up the OSD main menu.
2. Navigate to the *Adjustments* > *Settings* menu.
3. Enter the *Self Calibration Frequency* submenu.
4. Select one of the available frequency presets.

5.11 Factory reset

About factory reset

A factory reset allows you to fully restore the display to its original factory setting.

To perform a factory reset

1. Bring up the OSD main menu.
2. Navigate to the *Adjustments* > *Settings* menu.
3. Enter the *Factory Reset* submenu.
4. Select *Yes* or *No* as desired and confirm.

6. MAINTENANCE

General maintenance information

The Eonis does not require any scheduled maintenance or calibration activities. We recommend to use QAWeb with the Barco default tests and frequencies to calibrate and maintain the display or return the display to a Barco approved maintenance organization. In any case of doubts, contact the Barco Healthcare Division.

6.1 Cleaning instructions

To clean the display

Clean the display using a sponge, cleaning cloth or soft tissue, lightly moistened with a recognized cleaning product for medical equipment. Read and follow all label instructions on the cleaning product. In case of doubt about a certain cleaning product, use plain water.

Do not use following products:

- For WP version: alcohol/solvents at higher concentration > 70%, for all other versions; alcohol/solvents at higher concentration > 5%
- Strong alkalis lye, strong solvents
- Acid
- Detergents with fluoride
- Detergents with ammonia
- Detergents with abrasives
- Steel wool
- Sponge with abrasives
- Steel blades
- Cloth with steel thread



CAUTION: Take care not to damage or scratch the front glass or LCD. Be careful with rings or other jewelry and do not apply excessive pressure on the front glass or LCD.



CAUTION: For black model only: Do not apply or spray liquid directly to the display as excess liquid may cause damage to internal electronics. Instead, apply the liquid to a cleaning cloth.

7. IMPORTANT INFORMATION

7.1 Safety information

General recommendations

Read the safety and operating instructions before operating the device.

Retain safety and operating instructions for future reference.

Adhere to all warnings on the device and in the operating instructions manual.

Follow all instructions for operation and use.

Electrical Shock or Fire Hazard

To prevent electric shock or fire hazard, do not remove cover.

No serviceable parts inside. Refer servicing to qualified personnel.

Do not expose this apparatus to rain or moisture.

Modifications to the unit:

Do not modify this equipment without authorization of the manufacturer.

Type of protection (electrical):

Display with external power supply: Class I equipment.

Degree of safety (flammable anesthetic mixture):

Equipment not suitable for use in the presence of a flammable anesthetic mixture with air or with oxygen or nitrous oxide.

Non-patient care equipment

- Equipment primarily for use in a health care facility that is intended for use where contact with a patient is unlikely (no applied part).
- The equipment may not be used with life support equipment.
- The user should not touch the equipment, nor its signal input ports (SIP)/signal output ports (SOP) and the patient at the same time.

Power connection – Equipment with external 12 VDC power supply

- Power requirements: The equipment must be powered using the delivered medical approved 12 VDC (⎓) power supply.
- The medical approved DC (⎓) power supply must be powered by the AC mains voltage.
- The power supply is specified as a part of the ME equipment or combination is specified as a ME system.
- To avoid the risk of electric shock, this equipment must only be connected to a supply mains with protective earth.
- The equipment should be installed near an easily accessible outlet.
- The equipment is intended for continuous operation.

Transient over-voltage

If the device is not used for a long time, disconnect it from the AC inlet to avoid damage by transient over-voltage.

To fully disengage the power to the device, please disconnect the power cord from the AC inlet.

Power cords:

- Do not overload wall outlets and extension cords as this may result in fire or electric shock.
- Mains lead protection (U.S.: Power cord): Power cords should be routed so that they are not likely to be walked upon or pinched by items placed upon or against them, paying particular attention to cords at plugs and receptacles.
- The power supply cord should be replaced by the designated operator only at all time.
- Use a power cord that matches the voltage of the power outlet, which has been approved and complies with the safety standard of your particular country.

Grounding reliability

Grounding reliability can only be achieved when the equipment is connected to an equivalent receptacle marked “Hospital Only” or “Hospital Grade” (located on product or power supply cord)

External equipment

External equipment intended for connection to signal input/output or other connectors, shall comply with relevant UL/ EN/ IEC standard (e.g. UL/EN/IEC 60950 for IT equipment and UL/EN 60601-1 / IEC 60601 series for medical electrical equipment). In addition, all such combinations -systems- shall comply with the standard IEC 60601-1-1, safety requirements for medical electrical systems. Equipment not complying with UL/EN / IEC 60601-1 shall be kept outside the patient environment, as defined in the standard.

Equipment not complying with IEC 60601 must be kept outside the patient environment, as defined in the standard as at least 1.5 meters from the patient or the patient support.

Any person who connects external equipment to signal input, signal output, or other connectors has formed a system and is therefore responsible for the system to comply with the requirements of IEC 60601-1-1. If in doubt, speak with a qualified technician.

In locations where 240 V outlets are used, connect this display only on a center-tapped, 240 V, single-phase supply.

Water and moisture

Never expose the device to rain or moisture. Never use the device near water - e.g. near a bathtub, washbasin, swimming pool, kitchen sink, laundry tub or in a wet basement.

Ventilation

Do not cover or block any ventilation openings in the cover of the set. When installing the device in a cupboard or another enclosed location, heed the necessary space between the set and the sides of the cupboard.

Installation

Place the device on a flat, solid and stable surface that can support the weight of at least 3 devices. If you use an unstable stand, the device may fall, causing serious injury to a child or adult, and serious damage to the device.

This apparatus conforms to:

CE (MDD 93/42/EEC class I product), CE-2014/30/EU, IEC 60601-1 (ED.3), IEC 60601-1 (ED.3);am1, ANSI/AAMI ES60601-1 (2005 + C1:09 + A2:10 + A1:12), CAN/CSA-C22.2 No. 60601-1 (2014), EN 60601-1-2:2007, EN 60601-1:2006/A11:2011/A1:2013/A12:2014, KC, VCCI, FCC class B, ICES-001 Level B, FDA Class I device, RoHS, BSMI.

National Scandinavian Deviations for CL. 1.7.2:

Finland: "Laite on liitettävä suojamaadoituskoskettimilla varustettuun pistorasiaan"

Norway: "Apparatet må tilkoples jordet stikkontakt"

Sweden: "Apparaten skall anslutas till jordat uttag"

Operating principle

The single device output analog signals through ADC element (Analog Digital Convert) conversion to become a digital signal and the video signal is via Video Decoder conversion. It has become the same digital signal, these signals via Scaler IC as zoom in or out action and digital image processing, then through the cable line transmission LVDS signals to one of the LCD module. The last by the clock controller (Timing Controller, TCON), the clock signal is transmitted to the drive IC on the panel and turn on Backlight for LCD module light source by Scaler control.

BSMI

警語:使用過度恐傷害視力

注意事項:

1. 使用30分鐘請休息10分鐘
2. 未滿兩歲幼兒不看螢幕, 2歲以上每天看螢幕不要超過1小時

7.2 Environmental information

Disposal Information

Waste Electrical and Electronic Equipment



This symbol on the product indicates that, under the European Directive 2012/19/EU governing waste from electrical and electronic equipment, this product must not be disposed of with other municipal waste. Please dispose of your waste equipment by handing it over to a designated collection point for the recycling of waste electrical and electronic equipment. To prevent possible harm to the environment or human health from uncontrolled waste disposal, please separate these items from other types of waste and recycle them responsibly to promote the sustainable reuse of material resources.

For more information about recycling of this product, please contact your local city office or your municipal waste disposal service.

For details, please visit the Barco website at: http://www.barco.com/en/AboutBarco/weee

Turkey RoHS compliance



Türkiye Cumhuriyeti: AEEE Yönetmeliğine Uygundur.

[Republic of Turkey: In conformity with the WEEE Regulation]

中国大陆 RoHS

Chinese Mainland RoHS

根据中国大陆《电器电子产品有害物质限制使用管理办法》(也称为中国大陆RoHS)，以下部分列出了Barco产品中可能包含的有毒和/或有害物质的名称和含量。中国大陆RoHS指令包含在中国信息产业部MCV标准:“电子信息产品中有毒物质的限量要求”中。

According to the “Management Methods for the Restriction of the Use of Hazardous Substances in Electrical and Electronic Products ” (Also called RoHS of Chinese Mainland), the table below lists the names and contents of toxic and/or hazardous substances that Barco’s product may contain. The RoHS of Chinese Mainland is included in the MCV standard of the Ministry of Information Industry of China, in the section “Limit Requirements of toxic substances in Electronic Information Products”.

零件项目(名称) Component name	有毒有害物质或元素 Hazardous substances and elements					
	铅 Pb	汞 Hg	镉 Cd	六价铬 Cr6+	多溴联苯 PBB	多溴二苯醚 PBDE
印制电路配件 Printed Circuit Assemblies	X	O	O	O	O	O
液晶面板 LCD panel	X	O	O	O	O	O
外接电(线)缆 External Cables	X	O	O	O	O	O
内部线路 Internal wiring	O	O	O	O	O	O
金属外壳 Metal enclosure	O	O	O	O	O	O
塑胶外壳 Plastic enclosure	O	O	O	O	O	O
散热片(器) Heatsinks	O	O	O	O	O	O
电源供应器 Power Supply Unit	X	O	O	O	O	O
风扇 Fan	O	O	O	O	O	O
文件说明书 Paper Manuals	O	O	O	O	O	O
光盘说明书 CD manual	O	O	O	O	O	O

本表格依据SJ/T 11364的规定编制

This table is prepared in accordance with the provisions of SJ/T 11364.

o: 表示该有毒有害物质在该部件所有均质材料中的含量均在 GB/T 26572 标准规定的限量要求以下.

o: Indicates that this toxic or hazardous substance contained in all of the homogeneous materials for this part is below the limit requirement in GB/T 26572.

x: 表示该有毒有害物质至少在该部件的某一均质材料中的含量超出 GB/T 26572 标准规定的限量要求.

x: Indicates that this toxic or hazardous substance contained in at least one of the homogeneous materials used for this part is above the limit requirement in GB/T 26572.

在中国大陆销售的相应电子信息产品(EIP)都必须遵照中国大陆《电子电气产品有害物质限制使用标识要求》标准贴上环保使用期限(EFUP)标签。Barco产品所采用的EFUP标签(请参阅实例，徽标内部的编号使用于指定产品)基于中国大陆的《电子信息产品环保使用期限通则》标准。

All Electronic Information Products (EIP) that are sold within Chinese Mainland must comply with the “Marking for the restriction of the use of hazardous substances in electrical and electronic product” of Chinese Mainland, marked with the Environmental Friendly Use Period (EFUP) logo. The number inside the EFUP logo that Barco uses (please refer to the photo) is based on the “General guidelines of environment-friendly use period of electronic information products” of Chinese Mainland.



Taiwan BSMI RoHS

單元 Unit	限用物質及其化學符號 Restricted substances and its chemical symbols					
	鉛 Lead (Pb)	汞 Mercury (Hg)	鎘 Cadmium (Cd)	六價鉻 Hexavalent chromium (Cr^{+6})	多溴聯苯 Poly-brominated biphenyls (PBB)	多溴二苯醚 Polybromi-nated diphenyl ethers (PBDE)
印刷電路(含零组件) PCBA (including the components)	–	O	O	O	O	O
液晶顯示屏 LCD	–	O	O	O	O	O
電源适配器 Power adapter	–	O	O	O	O	O
電缆/連接器 Cable / connector	O	O	O	O	O	O
機械部件-金属件 Mechanical parts – Metal	–	O	O	O	O	O
塑膠殼 Plastic cover	O	O	O	O	O	O
電源線/信号線 Power supply / signal cable	–	O	O	O	O	O
機械部件-其他 Mechanical Parts – Others	O	O	O	O	O	O
紙/油墨(標簽、說明書、包裝盒等) Paper/Ink (Label, Instruction and packaging etc.)	O	O	O	O	O	O
背光燈管部件 Backlight assembly	O	O	O	O	O	O

備考1. ″超出0.1 wt %″ 及 ″超出0.01 wt %″ 係指限用物質之百分比含量超出百分比含量基準值。

Note 1: “exceeding 0.1 wt%” and “exceeding 0.01 wt%” indicate that the percentage content of the restricted substance exceeds the reference percentage value of presence condition.

備考2. ″O″ 係指該項限用物質之百分比含量未超出百分比含量基準值。

Note 2: “O” indicates that the percentage content of the restricted substance does not exceed the percentage of reference value of presence.

備考3. ″–″ 係指該項限用物質為排除項目。

Note 3: The “–” indicates that the restricted substance corresponds to the exemption.

7.3 Regulatory compliance information

Indications for use

This display is an AMLCD display designed for viewing X-ray images by professional physician for infant or adults for reference purpose. This unit should not be used near patients (where patients are likely to be in unconscious condition) and should be kept outside of 1.83 m perimeter and 2.29 m vertical.

FCC class B

This device complies with Part 15 of the FCC Rules. Operation is subject to the following two conditions: (1) this device may not cause harmful interference, and (2) this device must accept any interference received, including interference that may cause undesired operation.

This device has been tested and found to comply with the limits for a Class B digital device, pursuant to Part 15 of the FCC Rules. These limits are designed to provide reasonable protection against harmful interference in a residential installation. This device generates, uses and can radiate radio frequency energy and, if not installed and used in accordance with the instructions, may cause harmful interference to radio communications. However, there is no guarantee that interference will not occur in a particular installation. If this device does cause harmful interference to radio or television reception, which can be determined by turning the device off and on, the user is encouraged to try to correct the interference by one or more of the following measures:

- Reorient or relocate the receiving antenna.
- Increase the separation between the device and receiver.
- Connect the device into an outlet on a circuit different from that to which the receiver is connected.
- Consult the dealer or an experienced radio/TV technician for help.

Changes or modifications not expressly approved by the party responsible for compliance could void the user's authority to operate the equipment.

Canadian notice

CAN ICES-1/NMB-1

7.4 EMC notice

General information

No specific requirement on the use of external cables or other accessories except power supply.

With the installation of the device, use only the delivered power supply or a spare part provided by the legal manufacturer. Using another can result in a decrease of the immunity level of the device.

Electromagnetic emissions

The Eonis is intended for use in the electromagnetic environment specified below. The customer or the user of the Eonis should assure that it is used in such an environment.

Emissions test	Compliance	Electromagnetic environment – Guidance
RF emissions CISPR 11	Group 1	The Eonis uses RF energy only for its internal function. Therefore, its RF emissions are very low and are not likely to cause any interference in nearby electronic equipment.

Emissions test	Compliance	Electromagnetic environment – Guidance
RF emissions CISPR 11	Class B	The Eonis is suitable for use in all establishments, including domestic establishments and those directly connected to the public low-voltage power supply network that supplies buildings used for domestic purposes.
Harmonic emissions IEC 61000-3-2	Class D	
Voltage fluctuations/ flicker emissions IEC 61000-3-3	Complies	

This Eonis complies with appropriate medical EMC standards on emissions to, and interference from surrounding equipment. Operation is subject to the following two conditions: (1) this device may not cause harmful interference, and (2) this device must accept any interference received, including interference that may cause undesired operation.

Interference can be determined by turning the equipment off and on.

If this equipment does cause harmful interference to, or suffer from harmful interference of, surrounding equipment, the user is encouraged to try to correct the interference by one or more of the following measures:

- Reorient or relocate the receiving antenna or equipment.
- Increase the separation between the equipment and receiver.
- Connect the equipment into an outlet on a circuit different from that to which the receiver is connected.
- Consult the dealer or an experienced technician for help.

Electromagnetic immunity

The Eonis is intended for use in the electromagnetic environment specified below. The customer or the user of the Eonis should assure that it is used in such an environment.

Immunity test	IEC 60601 Test levels	Compliance level	Electromagnetic environment – guidance
Electrostatic discharge (ESD) IEC 61000-4-2	± 6kV contact ± 8kV air	± 6kV contact ± 8kV air	Floors should be wood, concrete or ceramic tile. If floors are covered with synthetic material, the relative humidity should be at least 30%
Electrical fast transient/burst IEC 61000-4-4	± 2kV for power supply lines ± 1kV for input/ output lines	± 2kV for power supply lines ± 1kV for input/ output lines	Mains power quality should be that of a typical commercial or hospital environment
Surge IEC61000-4-5	± 1 kV line(s) to line(s) ± 2 kV line(s) to earth	± 1 kV line(s) to line(s) ± 2 kV line(s) to earth	Mains power quality should be that of a typical commercial or hospital environment

Immunity test	**IEC 60601** **Test levels**	**Compliance level**	**Electromagnetic environment – guidance**
Voltage dips, short interruptions and voltage variations on power supply input lines IEC 61000-4-11	< 5% U_T [1](> 95% dip in U_T) for 0.5 cycle 40% U_T (60% dip in U_T) for 5 cycles 70% U_T (30% dip in U_T) for 25 cycles < 5% U_T (>95% dip in U_T) for 5s	< 5% U_T (> 95% dip in U_T) for 0.5 cycle 40% U_T (60% dip in U_T) for 5 cycles 70% U_T (30% dip in U_T) for 25 cycles < 5% U_T (>95% dip in U_T) for 5s	Mains power quality should by that of a typical commercial or hospital environment. If the user of the Eonis requires continued operation during power mains interruptions, it is recommended that the Eonis be powered from an uninterruptible power supply or a battery.
Power frequency (50/60 Hz) magnetic field IEC 61000-4-8	3 A/m	Not applicable [2]	Power frequency magnetic fields should be at levels characteristic of a typical location in a typical commercial or hospital environment.
Conducted RF IEC 61000-4-6 Radiated RF IEC 61000-4-3	3 Vrms 150 kHz to 80 MHz 3 V/m 80 MHz to 2.5 GHz	3 V 3 V/m	Portable and mobile RF communications equipment should be used no closer to any part of the Eonis, including cables, than the recommended separation distance calculated from the equation applicable to the frequency of the transmitter. Recommended separation distance **d = 1.2√P** **d = 1.2√P** 80 MHz to 800 MHz **d = 2.3√P** 800 MHz to 2.5 Ghz Where P is the maximum output power rating of the transmitter in watts (W) according to the transmitter manufacturer and d is the recommended separation distance in meters (m). Field strengths from fixed RF transmitters, as determined by an electromagnetic site survey,[3] should be less than the compliance

1. is the a.c. mains voltage prior to application of the test level.
2. Eonis doesn't contain susceptible components to magnetic fields

Immunity test	IEC 60601 Test levels	Compliance level	Electromagnetic environment – guidance
			level in each frequency range.[4] Interference may occur in the vicinity of equipment marked with symbol: 

At 80 MHz and 800 MHz, the higher frequency range applies.

These guidelines may not apply in all situations. Electromagnetic propagation is affected by absorption and reflection from structures, objects and people.

Recommended separation distance

The Eonis is intended for use in an electromagnetic environment in which radiated RF disturbances are controlled. The customer of the user of the Eonis can help prevent electromagnetic interference by maintaining a minimum distance between portable and mobile RF communications equipment (transmitters) and the Eonis as recommended below, according to the maximum output power of the communications equipment.

Rated maximum output power of transmitter [5] W	Separation distance according to frequency of transmitter		
	150kHz to 80MHz $d=1.2\sqrt{P}$	80MHz to 800MHz $d=1.2\sqrt{P}$	800MHz to 2.5GHz $d=2.3\sqrt{P}$
0.01	0.12	0.12	0.23
0.1	0.38	0.38	0.73
1	1.2	1.2	2.3
10	3.8	3.8	7.3
100	12	12	23

At 80 MHz and 800 MHz, the separation distance for the higher frequency range applies.

These guidelines may not apply in all situations. Electromagnetic propagation is affected by absorption and reflection form structures, object and people.

3. Field strengths from fixed transmitters, such as base stations for radio (cellular/cordless) telephones and land mobile radios, amateur radio, AM and FM radio broadcast and TV broadcast cannot be predicted theoretically with accuracy. To assess the electromagnetic environment due to fixed RF transmitters, an electromagnetic site survey should be considered. If the measured field strength in the location in which the Eonis is used exceeds the applicable RF compliance level above, the Eonis should be observed to verify normal operation. If abnormal performance is observed, additional measures may be necessary, such as re-orienting or relocating the Eonis.
4. Over the frequency range 150 kHz to 80 MHz, field strengths should be less than 3 V/m.
5. For transmitters rated at a maximum output power not listed above, the recommended separation distance d in meters (m) can be estimated using the equation applicable to the frequency of the transmitter. Where P is the maximum output power rating of the transmitter in watts (W) according to the transmitter manufacturer.

7.5 Explanation of symbols

Symbols on the device

On the device or power supply, you may find the following symbols (nonrestrictive list):

	Indicates compliance with the Directive 93/42/EEC as Class I device
	Indicates compliance with the Directive 93/42/EEC as Class II device
	Indicates compliance with Part 15 of the FCC rules (Class A or Class B)
	Indicates the device is approved according to the UL regulations
	Indicates the device is approved according to the UL regulations for Canada and US
	Indicates the device is approved according to the UL regulations for Canada and US
	Indicates the device is approved according to the UL Demko regulations
	Indicates the device is approved according to the CCC regulations
	Indicates the device is approved according to the VCCI regulations
	Indicates the device is approved according to the KC regulations
	Indicates the device is approved according to the BSMI regulations
	Indicates the device is approved according to the PSE regulations
	Indicates the USB connectors on the device

	Indicates the DisplayPort connectors on the device
	Indicates the legal manufacturer
	Indicates the manufacturing date
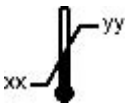	Indicates the temperature limitations[6] for the device to safely operate within specs
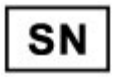	Indicates the device serial number
	Indicates the device part number or catalogue number
	**Warning**: dangerous voltage
	**Caution**
	Consult the operating instructions
	Indicates this device must not be thrown in the trash but must be recycled, according to the European WEEE (Waste Electrical and Electronic Equipment) directive
	Indicates Direct Current (DC)
	Indicates Alternating Current (AC)
	Stand-by
	Equipotentiality The screw on the Potential equalization conductor is not for fixing purposes. Please make sure that the conductor can be detached without the use of a tool.

Symbols on the box

On the box of the device, you may find the following symbols (nonrestrictive list):

6. Values for xx and yy can be found in the technical specifications paragraph.

	Indicates a device that can be broken or damaged if not handled carefully when being stored.
	Indicates a device that needs to be protected from moisture when being stored.
	Indicates the storage direction of the box. The box must be transported, handled and stored in such a way that the arrows always point upwards.
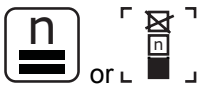	Indicates the maximum number of identical boxes which may be stacked on each other, where “n” is the limiting number.
	Indicates the weight of the box and that it should be carried with two persons.
	Indicates that the box should not be cut with a knife, a cutter or any other sharp object.
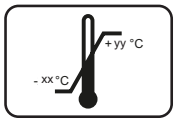	Indicates the temperature limits[7] to which the device can be safely exposed when being stored.
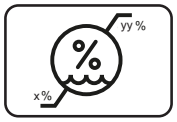	Indicates the range[7] of humidity to which the device can be safely exposed when being stored.
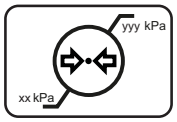	Indicates the range[7]of atmospheric pressure to which the device can be safely exposed when being stored.

7.6 Legal disclaimer

Disclaimer notice

Although every attempt has been made to achieve technical accuracy in this document, we assume no responsibility for errors that may be found. Our goal is to provide you with the most accurate and usable documentation possible; if you discover errors, please let us know.

Barco software products are the property of Barco. They are distributed under copyright by Barco NV or Barco Inc., for use only under the specific terms of a software license agreement between Barco NV or Barco Inc. and the licensee. No other use, duplication, or disclosure of a Barco software product, in any form, is authorized.

The specifications of Barco products are subject to change without notice.

Trademarks

All trademarks and registered trademarks are property of their respective owners.

Copyright notice

This document is copyrighted. All rights are reserved. Neither this document, nor any part of it, may be reproduced or copied in any form or by any means - graphical, electronic, or mechanical including photocopying, taping or information storage and retrieval systems - without written permission of Barco.

7. Values for xx and yy can be found in the technical specifications paragraph.

© 2016 Barco NV all rights reserved.

7.7 Technical specifications

Overview

Product acronym	MDRC-2224 BL	MDRC-2224 WH	MDRC-2224 WP
Screen technology	TFT Color LCD IPS		
Active screen size (diagonal)	611.3 mm (24.1”)		
Active screen size (H x V)	518.4 mm x 324.0 mm (20.41” x 12.76”)		
Aspect ratio (H:V)	16:10		
Resolution	2MP (1920 x 1200)		
Pixel pitch	0.270		
Color imaging	Yes		
Gray imaging	Yes		
Color support	10 bit		
Viewing angle (H, V)	178°		
Ambient Light Compensation (ALC)	Yes, preset values in OSD		
Front sensor	Yes		
Maximum luminance	300 cd/m² typical		
DICOM calibrated luminance	180 cd/m²		
Contrast ratio	1000:1 typical		
Response time (Tr + Tf)	14 ms typical		
Housing color	Black + Silver	White + Silver	
Video input signals	VGA, DisplayPort, HDMI		
USB ports	1 upstream, 2 downstream		
USB standard	2.0		
Power requirements (nominal)	100-240 V		
Power consumption (nominal)	40 W (<1.0 W in stand-by)		
Power save mode	Yes		
Power management	DPMS		
Dot clock	165 MHz		
OSD languages	English, French, German, Spanish, Italian, Dutch, Japanese, Traditional Chinese, Simplified Chinese, Korean		
Dimensions with stand (W x H x D)	560.4 x 533 x 164.45 mm		560.4 x 533 x 166.35 mm
Dimensions w/o stand (W x H x D)	560.4 x 366 x 59.82 mm		560.4 x 366 x 61.72 mm
Dimensions packaged (W x H x D)	481 x 273 x 761 mm		
Net weight with stand	8.58 kg		9.70 kg
Net weight w/o stand	5.20 kg		6.37 kg
Net weight packaged with stand	12.58 kg		13.70 kg
Height adjustment range	100 +/- 5.0 mm		
Tilt	-5° / +20°		
Swivel	-45° / +45°		

Product acronym	**MDRC-2224 BL**	**MDRC-2224 WH**	**MDRC-2224 WP**
Pivot	Yes		
Mounting standard	VESA (100 mm)		
Screen protection	N/A		Protective, non-reflective glass cover
Certifications	CE (MDD 93/42/EEC class I product), CE-2014/30/EU, IEC 60601-1 (ED.3), IEC 60601-1 (ED.3);am1, ANSI/AAMI ES60601-1 (2005 + C1:09 + A2:10 + A1:12), CAN/CSA-C22.2 No. 60601-1 (2014), EN 60601-1-2:2007, EN 60601-1:2006/A11:2011/A1:2013/A12:2014, KC, VCCI, FCC class B, ICES-001 Level B, FDA Class I device, RoHS, BSMI.		
Supplied accessories	User Guide		
	Cable routing strap		
	Video cables (1 x DP, 1 x HDMI)		
	Main cables (depending on the region of operation)		
	USB 2.0 cable		
	This adapter(s) is a forming part of the medical device. (Manufacturer: BridgePower Corp.; model: BPM060S12F03; Input: 100-240 V AC, 50-60 Hz, 1.5 A; Output: +12V DC (⎓), 5.0 A)		
QA software	QAWeb Private Practice, QAWeb 1.12x		
Warranty	3 years		
Operating temperature	+10°C / +35°C		
Storage & transport temperature	-20°C / +60°C		
Operating humidity	10% - 90% (non-condensing)		
Storage & transport humidity	5% - 90% (non-condensing) at 39 deg ambient		
Operation altitude	3000 m		
Storage & transport altitude	5500 m		
Operating pressure	70 kPa - 106 kPa		
Storage & transport pressure	50 kPa - 106 kPa		

A. TROUBLESHOOTING

A.1 Troubleshooting

General

If you experience trouble with the LCD display, refer to the following troubleshooting. If the problem persists, please contact your local dealer or our service center.

Problem: No image appears on the screen

- Push the standby button.
- Check if all I/O and power connectors are correctly connected as described in the “installation” section.
- Make sure the pins of the connectors are not crooked or broken.

Problem: Partial image or incorrectly displayed image

- Check to see if the resolution of your computer is higher than the resolution of the display.
- Re-configure the resolution of your computer to make it less than or equal to the native resolution (1920 x 1200)

Problem: Partial image or incorrectly displayed image

- Use “Clock” to make an adjustment.
- Check and re-configure the display mode of the vertical refresh rate of your graphics card to make it compatible with the display.

Problem: Image is unstable and flickering

- Use “Phase” to make an adjustment

Problem: Image is scrolling

- Check and make sure the VGA signal cable (or adapter) is well connected.
- Check and re-configure the display mode of the vertical refresh rate of your graphics card to make it compatible with the display.

Problem: Vague image (characters and graphics)

- Use “Clock” to make an adjustment. If this problem still exists, use “Phase” to make an adjustment.

A.2 Warning signals

General

Sometimes you may see warning messages for this display. This means that the display cannot correctly receive the signal form the computer graphics card.

Problem: No signal

This message means that the display has been powered on but it cannot receive any signal from the computer graphics card. Check all the power switches, power cables, and VGA signal cable.

Problem: Out of range

This message means that the signal of the computer graphics card is not compatible with the display. When the signal is not included in the compatibility mode we have listed in the appendices of this manual, the display will show this message.