ThinkStation P410 Platform Specifications

Components	Specification
Chipset	Intel C612 Platform Controller Hub (PCH)
System mgmt	Intel Active Management Technology 9
Processor	Up to one 140W Intel Xeon E5-1600 v4 family processors. Some Intel Xeon E5-2600 v4 processers are also available: E5-2637 v4 — 4C/3.5GHz/15MB/135W/DDR4-2400 E5-2623 v4 — 4C/2.6GHz/10MB/85W/DDR4-2133 E5-2620 v4 — 8C/2.1GHz/20MB/85W/DDR4-2133 E5-1680 v4 — 8C/3.4GHz/20MB/140W/DDR4-2400 333 E5-1660 v4 — 8C/3.2GHz/20MB/140W/DDR4-2400 E5-1650 v4 — 6C/3.6GHz/15MB/140W/DDR4-2400 E5-1630 v4 — 4C/3.7GHz/10MB/140W/DDR4-2400 E5-1620 v4 — 4C/3.5GHz/10MB/140W/DDR4-2400 E5-1607 v4 — 4C/3.1GHz/10MB/140W/DDR4-2133 E5-1603 v4 — 4C/2.8GHz/10MB/140W/DDR4-2133
Coprocessor	None
Memory DIMM slots	4 DIMM sockets. 4-channel capable. RDIMM. ECC. DDR4-2400
Memory capacity	128GB (32GB x 4)
Graphics	Two PCIe 3.0 x16 slots, up to two NVIDIA Quadro M4000, or up to one Quadro M5000
Supporting Graphics and GPU computing	Adapter / Cores / Memory / Power / SLI / Connector*** NVS 310 / 48 / 1GB / 19.5W / / 2xDP NVS 315 / 48 / 1GB / 19.5W / / 2xDVI-I SL/2xDP NVS 510 / 192 / 2GB / 35W / / 4xmini DP NVS 810 / 1024 / 4GB / 68W / / 8xmini DP Quadro K420 / 192 / 2GB / 41W / / DVI-I DL+DP Quadro K620 / 384 / 2GB / 45W / / DVI-I DL+DP Quadro K1200 / 512 / 4GB / 45W / / 4xmini DP Quadro M2000 / 768 / 4GB / 75W / / 4xDP Quadro M4000 / 1664 / 8GB / 120W / / 4xDP Quadro M5000 / 2048 / 8GB / 150W / / DVI-I DL+4xDP
Disk drive controller	**RAID 0, 1, 5, 10** with onboard SATA controller in chipset, SATA 6Gb/s. Optional **RAID 0, 1, 10** with optional LSI 9340-8i PCIe adapter, 12Gb/s SAS and SATA, optional upgrade to RAID 5 is available
Drive Bays	Two external 5.25" flex bays, two internal 3.5" bays. Up to one 9.5mm optical plus four 3.5"/2.5" disk drives plus three M.2 PCIe SSD (see right)
Supporting storage	3.5" HDD, 7.2K SATA6Gbs — 500GB/1TB/2TB/3TB/4TB, 1TB/2TB hybrid 2.5" HDD, 10K SAS12Gbs — 300GB/600GB 2.5" SSD, SATA6Gbs — 180GB/240GB/256GB/480GB with OPAL, 256GB/512GB/1TB without OPAL PCIe SSD, M.2 via PCIe 3.0 x4 adapter — 256GB/512GB/1TB, NVMe
Flex connector	None
Network interfaces	One onboard gigabit ethernet, Intel I218LM, supports Wake-on-LAN. Optional discrete ethernet adapters are available
HD Audio	Realtek ALC662 codec
TPM	TCG 1.2-compliant
Power supply	One fixed 450 watts, autosensing, 92%, 80 PLUS Platinum qualified
Front ports	Two USB 3.0, microphone (3.5mm), headphone (3.5mm)
Rear ports	Two USB 2.0, four USB 3.0, one ethernet (RJ-45), three analog audio ports (line-in, line-out, mic-in)
Additional ports	Supports the following optional ports: Two IEEE 1394 (one on rear and one on front flex module) via PCIe adpater, up to one adapter per system. Two rear USB 3.0 per PCIe adapter, up to three adapters per system. One rear Thunderbolt via PCIe adapter, or two front Thunderbolt (on flex module) via PCIe adapter, front and rear Thunderbolt cannot be intermixed. One rear serial via cable, up to one per system. One front eSATA (on flex module), or one rear eSATA via cable and PCIe slot bracket, up to one eSATA port per system
Media reader	9-in-1 USB 2.0 card reader. Optional 29-in-1 USB 2.0 card reader on flex module

Components	Specification
Mechanical	• 6.89"W x 16.77"D x 14.8"H • 175mm W x 426mm D x 376mm H • 30.86 lb (14kg) max configuration • 25-liter
Environmental specification	Temperature - operating — 50 °F to 95 °F (10 °C to 35 °C) Temperature - non operating (no package) — 14 °F to 140 °F (-10 °C to 60 °C) Temperature - non operating (with package) — -40 °F to 140 °F (-40 °C to 60 °C) Altitude - operating — (Unpressurized): 0-10000ft (0-3048m) Humidity - operating — 10%~80%, non-condensing Humidity - storage (with package) — 10%~90%, non-condensing RoHS-compliant, GREENGUARD on all models. EPEAT Gold rating, ENERGY STAR 6.1 qualified on selected models.
Base warranty	1 or 3-year limited onsite service with 9x5/NBD

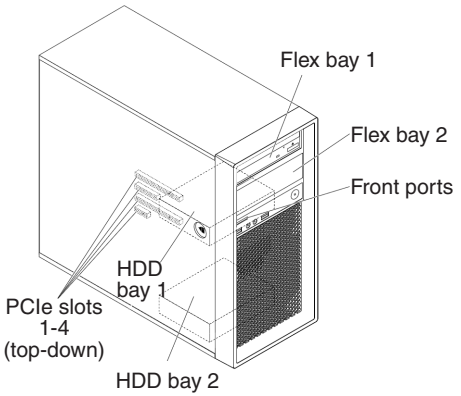

Expansion slots

Slot 1	PCIe 3.0 x16, full length, full height
Slot 2	PCIe 3.0 x8, full length, full height
Slot 3	PCIe 3.0 x16, full length, full height
Slot 4	PCIe 2.0 x4, half length, full height

Drive Bays

HDD bay 1	3.5", for one 3.5"/2.5" drive
HDD bay 2	3.5", for one 3.5"/2.5" drive
Flex bay 1	HH optical, or 3.5" HDD bay via optional conversion kit, or slim optical+3.5" HDD bay kit via optional conversion kit, or flex module
Flex bay 2	HH optical, or 3.5" HDD bay via optional conversion kit, or slim optical+3.5" HDD bay kit via optional conversion kit, or flex module

Note:
1. HDD bay 2 is not available when one Quadro M5000, two Quadro M4000, or two NVS 810 are used.
2. Flex module supports one or more of the following options: 9.5mm optical/29-in-1 USB 2.0 reader/one front IEEE 1394/one front eSATA/two front Thinderbolt. Up to one flex module is supported per system.
3. Up to one slim optical+3.5" HDD bay kit is supported per system.

For the list of ISV certifications, please visit *www.thinkworkstations.com/isv-certifications*
For a list of all supported options, please visit
https://download.lenovo.com/pccbbs/options_iso/ocm_april_2016.xlsx sheet

© Copyright Lenovo 2016. All rights reserved.

Model	30B3001E++
Product	P410
Region	EMEA
Machine Type	30B3
TopSeller	Yes
Processor	Xeon E5-1650 v4 6C/3.6GHz/15MB/140W/DDR4-2400
Memory	2x8GB RDIMM DDR4-2400 ECC
Graphics	Open
RAID Controller	Onboard
Storage	1x256GB SSD 2.5" SATA6Gbs OPAL
Optical	DVD±RW
Media reader	9-in-1
Power supply	450W 92%
Add-on ports	No
Keyboard/Mouse	USB Full/USB
Preloaded OS	Win10 Pro64
Base Warranty	3-year
Global	No
Ann Date	06/16