RELEASE STATUS
Production

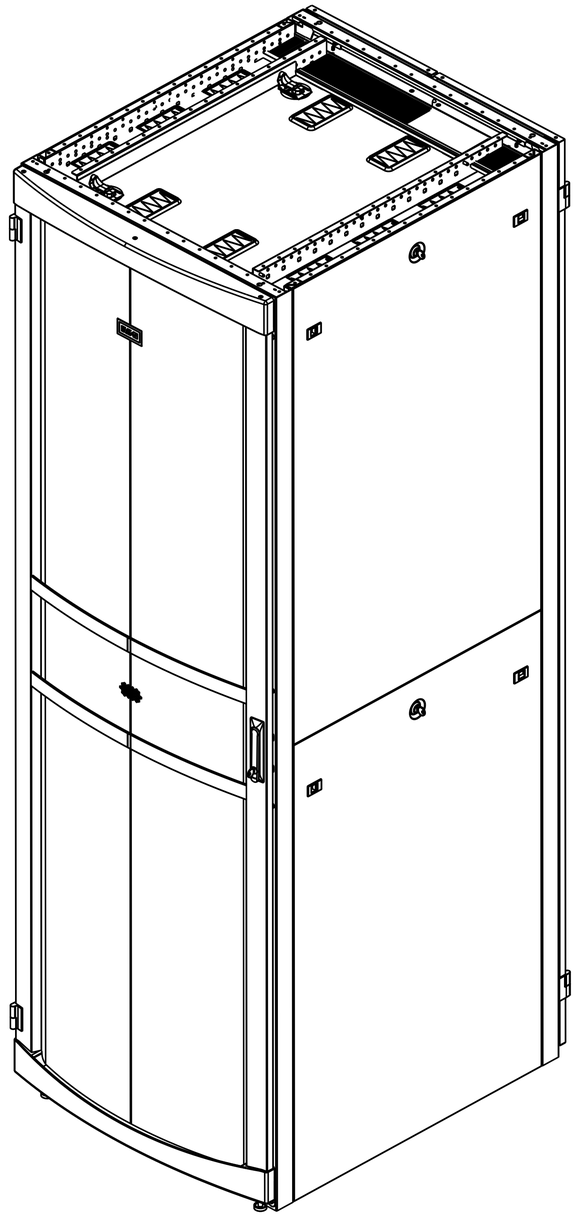

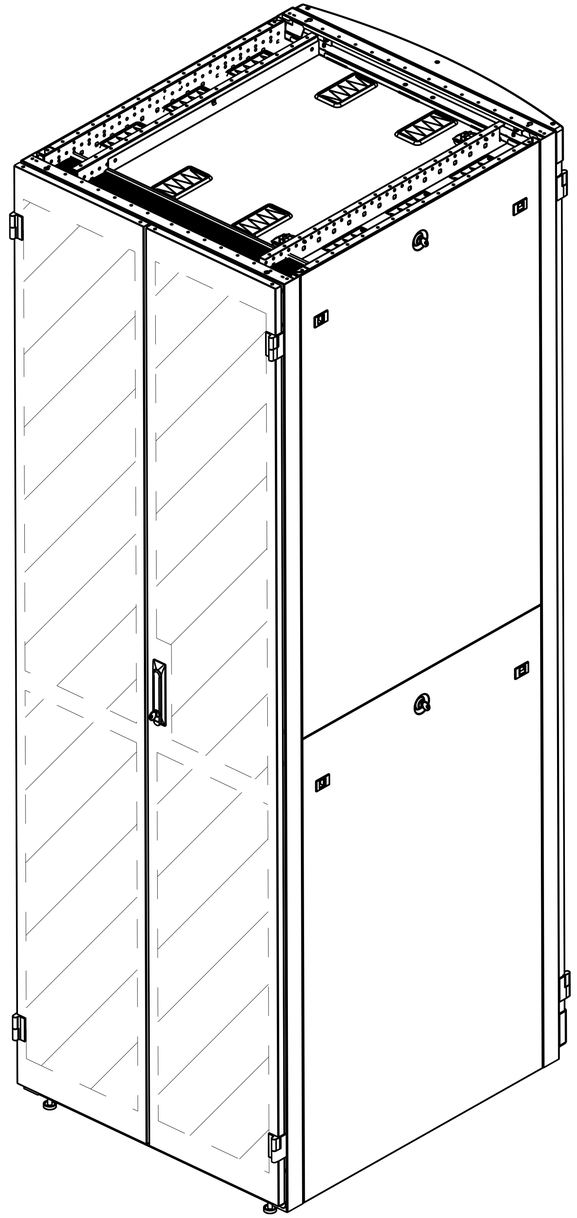

GENERAL NOTES:
1. ALL DIMENSIONS ARE IN INCHES UNLESS OTHERWISE NOTED. DUAL DIMENSIONS ARE SHOWN AS INCH (MILLIMETERS); I.E: PRIMARY (SECONDARY).
2. METRIC TOLERANCES: O PLACE DECIMAL IS ± .5MM; 1 PLACE DECIMAL IS ± .13MM
3. ALL FABRICATION MATERIALS SHALL BE RoHS COMPLIANT.

SHIPPING WEIGHT: 362 LB

PART NUMBER	POWDERCOAT COLOR
RSV5280B	BLACK
RSV5280W	EATON WHITE

REV	REV. DATE	REV'D BY	CURRENT REVISION DESCRIPTION	ECN OR EPR NUMBER
A	04/02/16	HJost	CHNG RSHPSKITxx TO RSHPOKITxx,RSPDUMTGx TO 1X, ADD HOLE PLUG,COMP UPDATES	ECO-100383

THIS DRAWING CONTAINS PROPRIETARY INFORMATION AND IS LOANED SUBJECT TO RETURN UPON DEMAND AND UPON THE EXPRESS CONDITION THAT IT WILL NOT BE USED IN ANY WAY DETRIMENTAL TO THE INTEREST OF EATON CORPORATION

DRAWN IN THIRD ANGLE PROJECTION

TOLERANCE UNLESS SPEC'D
.XX± .02
.XXX± .005
∠ ± 1°
ALL DIMENSIONS IN INCHES

CAGE NUMBER: 81824

DESIGN MGMT SITE: Worcester

MATERIAL:

MATERIAL FINISH:

SPEC #

ORIG EPR:

DES. BY HJost 09/01/15

DRWN. BY HJost 09/01/15

PROD GRP 33

COLOR:

CRS GA:

OTHER:

EATON

ASM,ENCLOSURE,52U, 800mm W x 1000mm D
HIGH FLOW CONFIG

SHEET: 1 OF 7

REV DATE: 04/02/16

D | RSV5280X | REV | A

RELEASE STATUS
Production

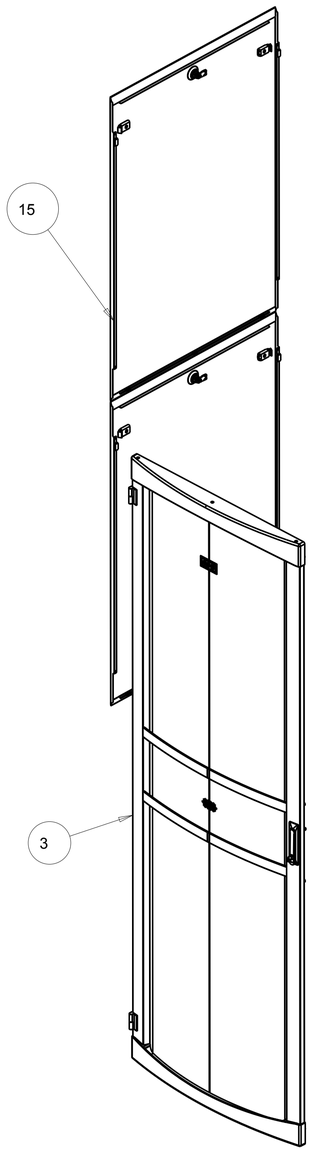

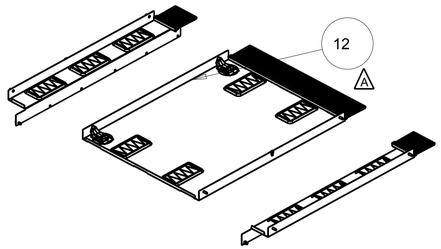

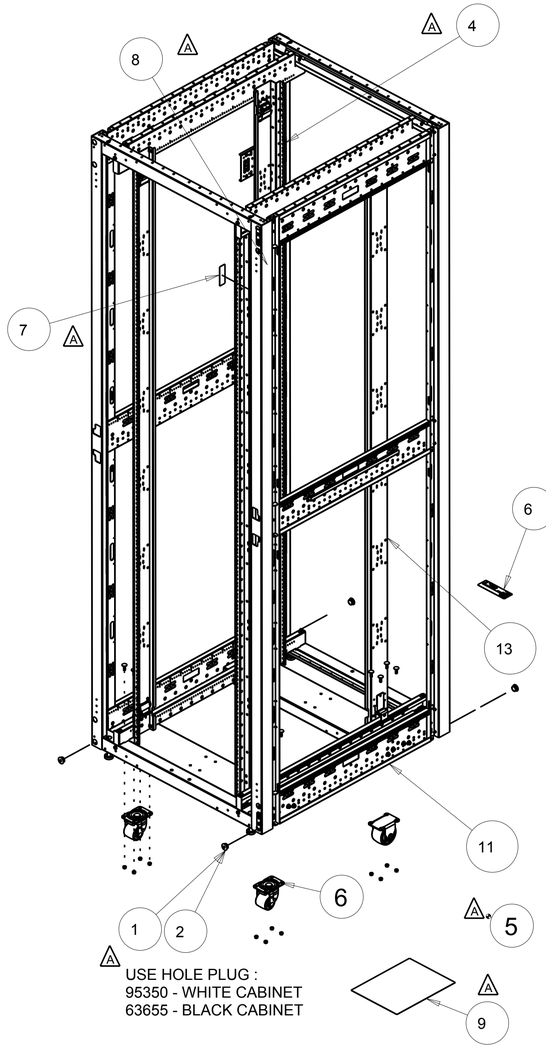

USE HOLE PLUG :
95350 - WHITE CABINET
63655 - BLACK CABINET

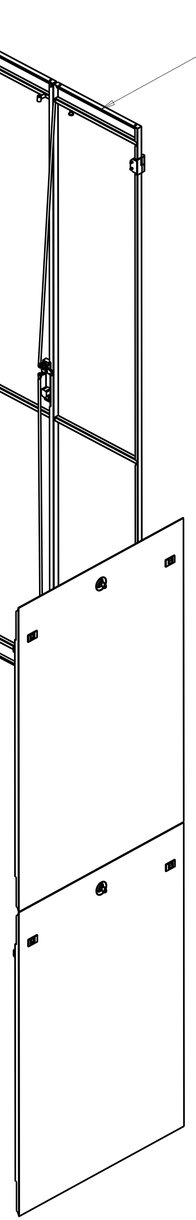

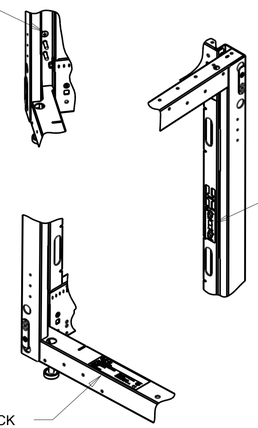

LABEL LOCATION DETAILS

ITEM	TYPE	DOCUMENT #	DESCRIPTION	QTY
15	PR	RSSP520X	KIT- SIDE PANEL,52U,1000mm, SOLID, 2 PC	2
14	PR	RSSDPS528X	ASY, REAR DOOR, 800 mm W X 52U H	1
13	PR	RSRSQ52X	ASM-RACK RAIL, 4 - 19"EIA , 52U, .375 SQ HOLES	1
12	PR	RSHPOKIT80X	PANEL, CONFIG-SNGL PNL, CBL PASS	1
11	PR	RSFM5280X	ASM-FRAME, 52U, 800mm W x 1000mm	1
10	PR	RSCSTRKIT	KIT- CASTERS, 3.26 H , 800 LB CAPACITY	1
A 9	PR	IL159003EN	INSTALLATION NOTE, MAIN	1
A 8	PR	105508	LABEL, GROUND SYMBOL, .50 DIA	4
A 7	PR	105507	LABEL, ANTI-TIP	1
A 6	PR	105505	LABEL- UL LIST (2416)	1
A 5	PR	71212	PACKAGING, 800mm, MED DUTY, W / MTG BRKT-HRDWRE	1
A 4	MP	RSPDUMTGX	ASM- BRKT e-PDU MTG , SINGLE CABLE MNGT A	1
3	MA	RSFDPS528LX	ASSEMBLY - FULL DOOR, LH, 52U X 800MM	1
A 2	CP	95350	3/4" HOLE PLUG, WHITE	4
A 1	CP	63655	HOLE PLUG, 0.750	4

GENERAL NOTES:
1. ALL DIMENSIONS ARE IN INCHES UNLESS OTHERWISE NOTED. DUAL DIMENSIONS ARE SHOWN AS INCH (MILLIMETERS); I.E: PRIMARY (SECONDARY).
2. METRIC TOLERANCES: O PLACE DECIMAL IS ± .5MM; 1 PLACE DECIMAL IS ± .13MM
3. ALL FABRICATION MATERIALS SHALL BE RoHS COMPLIANT.

PART NUMBER	POWDERCOAT COLOR
RSV5280B	BLACK
RSV5280W	EATON WHITE

REV	REV. DATE	REV'D BY	CURRENT REVISION DESCRIPTION	ECN OR EPR NUMBER
A	04/02/16	HJost	CHNG RSHPSKITxx TO RSHPOKITxx,RSPDUMTGx TO 1X, ADD HOLE PLUG,COMP UPDATES	ECO-100383

THIS DRAWING CONTAINS PROPRIETARY INFORMATION AND IS LOANED SUBJECT TO RETURN UPON DEMAND AND UPON THE EXPRESS CONDITION THAT IT WILL NOT BE USED IN ANY WAY DETRIMENTAL TO THE INTEREST OF EATON CORPORATION

DRAWN IN THIRD ANGLE PROJECTION

TOLERANCE UNLESS SPEC'D
XX± .02
.XXX± .005
∠ ± 1°
ALL DIMENSIONS IN INCHES

CAGE NUMBER: 81824

DESIGN MGMT SITE: Worcester

MATERIAL:

MATERIAL FINISH:

SPEC #

ORIG EPR:
DES. BY HJost 09/01/15
DRWN. BY HJost 09/01/15
PROD GRP 33
COLOR:
CRS GA:
OTHER:

EATON

ASM,ENCLOSURE,52U, 800mm W x 1000mm D
HIGH FLOW CONFIG

SHEET: 2 OF 7 | REV DATE: 04/02/16

D | RSV5280X | REV | A

RELEASE STATUS
Production

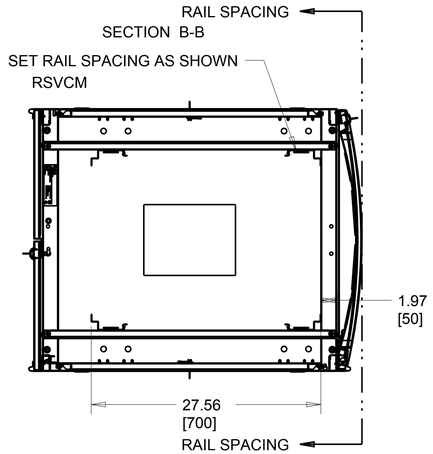

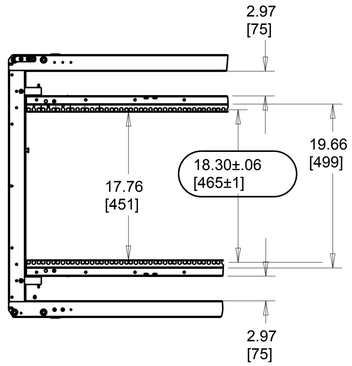

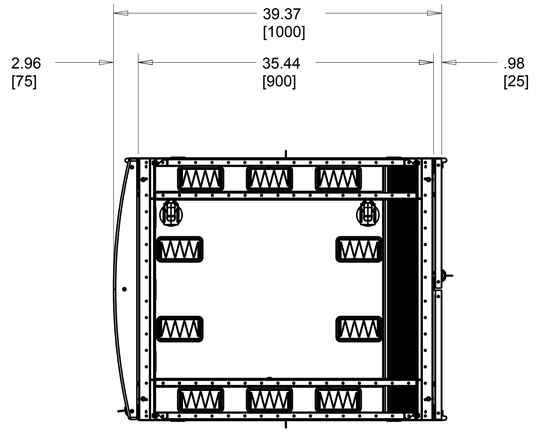

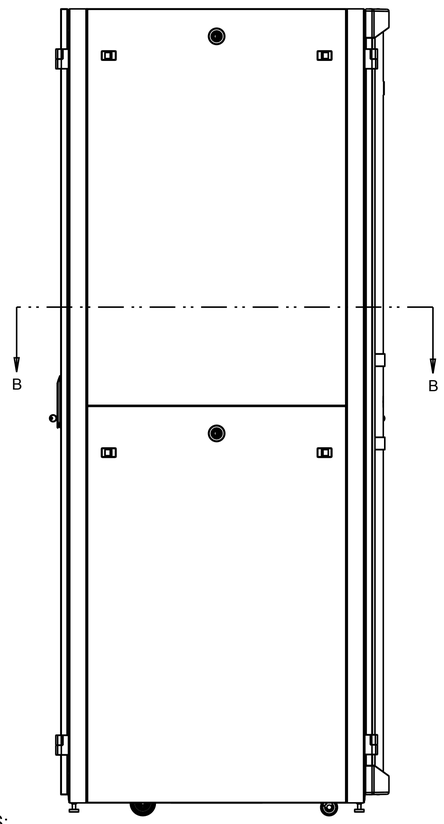

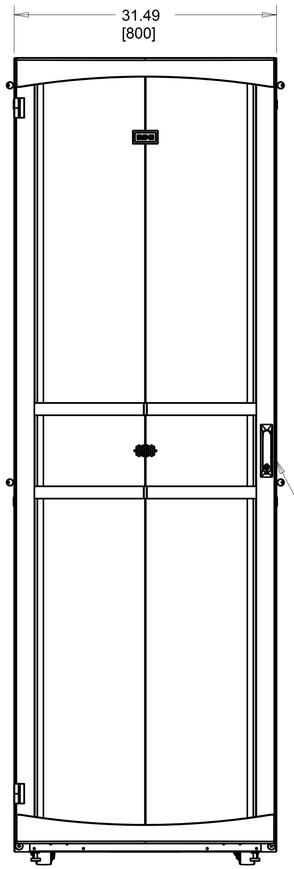

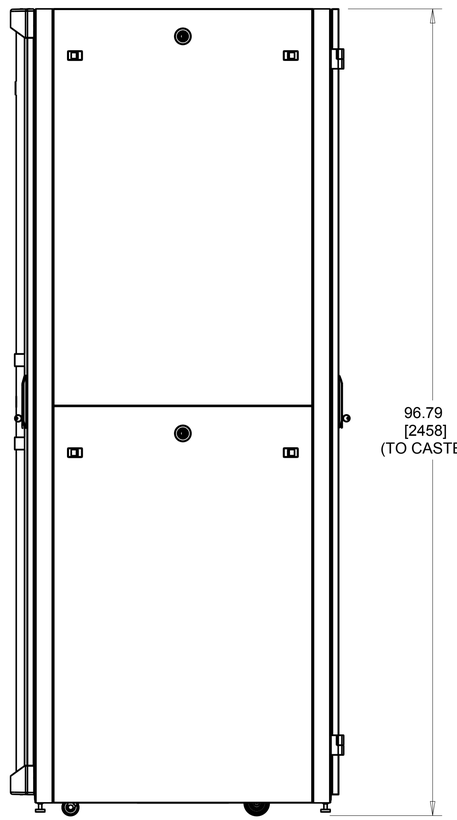



GENERAL NOTES:
1. ALL DIMENSIONS ARE IN INCHES UNLESS OTHERWISE NOTED. DUAL DIMENSIONS ARE SHOWN AS INCH (MILLIMETERS); I.E: PRIMARY (SECONDARY).
2. METRIC TOLERANCES: O PLACE DECIMAL IS ± .5MM; 1 PLACE DECIMAL IS ± .13MM
3. ALL FABRICATION MATERIALS SHALL BE RoHS COMPLIANT.

PART NUMBER	POWDERCOAT COLOR
RSV5280B	BLACK
RSV5280W	EATON WHITE

REV	REV. DATE	REV'D BY	CURRENT REVISION DESCRIPTION	ECN OR EPR NUMBER
A	04/02/16	HJost	CHNG RSHPSKITxx TO RSHPOKITxx,RSPDUMTGx TO 1X, ADD HOLE PLUG,COMP UPDATES	ECO-100383

THIS DRAWING CONTAINS PROPRIETARY INFORMATION AND IS LOANED SUBJECT TO RETURN UPON DEMAND AND UPON THE EXPRESS CONDITION THAT IT WILL NOT BE USED IN ANY WAY DETRIMENTAL TO THE INTEREST OF EATON CORPORATION

DRAWN IN THIRD ANGLE PROJECTION

TOLERANCE UNLESS SPEC'D
.XX± .02
.XXX± .005
ANGLES ± 1°
ALL DIMENSIONS IN INCHES

CAGE NUMBER: 81824
DESIGN MGMT SITE: Worcester
MATERIAL:
MATERIAL FINISH:
SPEC #

ORIG EPR:
DES. BY HJost 09/01/15
DRWN. BY HJost 09/01/15
PROD GRP 33
COLOR:
CRS GA:
OTHER:

EATON

ASM,ENCLOSURE,52U, 800mm W x 1000mm D
HIGH FLOW CONFIG

SHEET: 3 OF 7
REV DATE: 04/02/16

D	RSV5280X	REV	A

RELEASE STATUS
Production

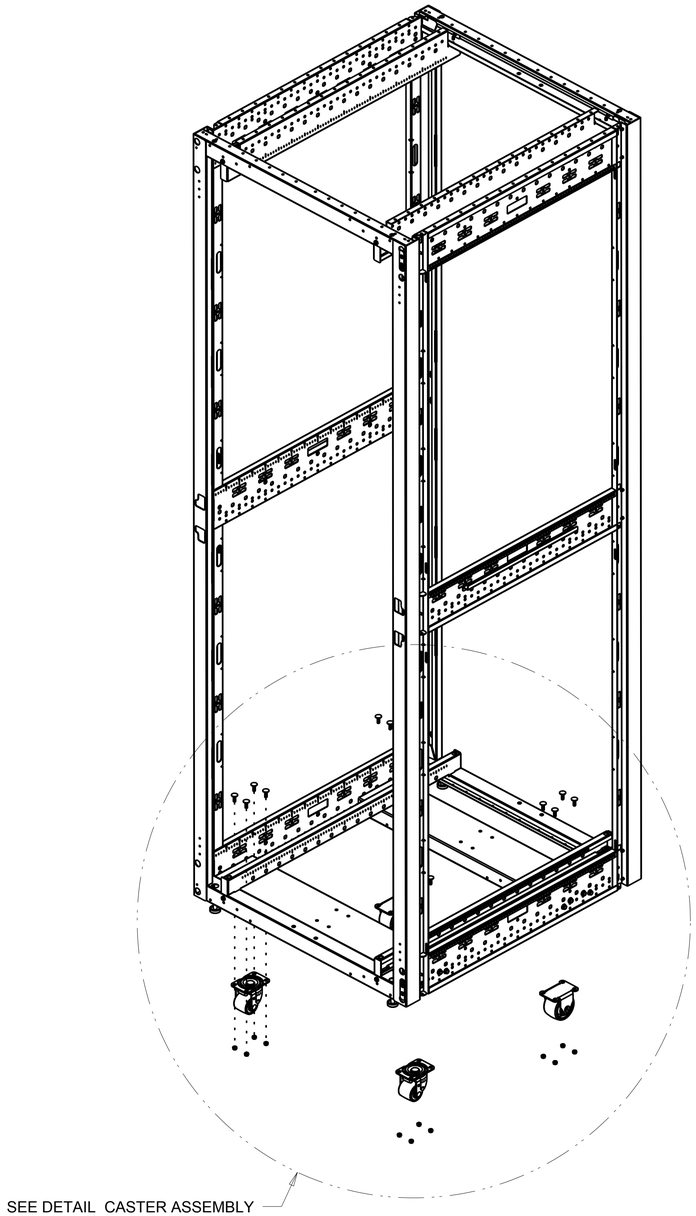

DETAIL CASTER ASSEMBLY
SCALE 0.250

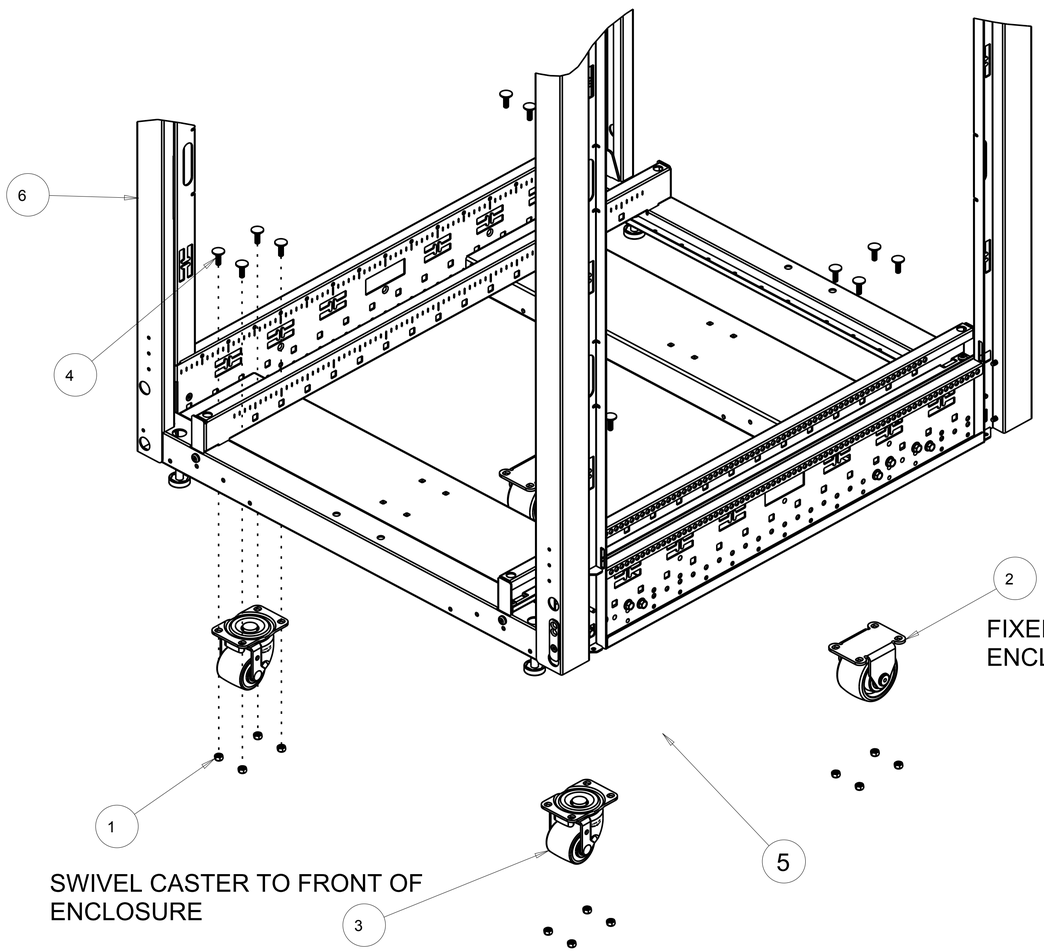

BALLOON REFERENCE ONLY - SEE SHEET 2 FOR ACTUAL BOM

ITEM	TYPE	DOCUMENT #	DESCRIPTION	QTY
6	PR	RSFM5280X	ASM-FRAME, 52U, 800mm W x 1000mm	1
5	PR	RSCSTRKIT	KIT- CASTERS, 3.26 H , 800 LB CAPACITY	1
4	CP	105334	BOLT, CARRIAGE, M6X1X20	16
3	CP	104014	CASTER, SWIVEL, 3.26" H, 800 LB	2
2	CP	104013	CASTER, RIGID, 3.26" H, 800 LB	2
1	CP	91504	LOCK NUT - M6 NYLON INSERT	16

GENERAL NOTES:
1. ALL DIMENSIONS ARE IN INCHES UNLESS OTHERWISE NOTED. DUAL DIMENSIONS ARE SHOWN AS INCH (MILLIMETERS); I.E: PRIMARY (SECONDARY).
2. METRIC TOLERANCES: O PLACE DECIMAL IS ± .5MM; 1 PLACE DECIMAL IS ± .13MM
3. ALL FABRICATION MATERIALS SHALL BE RoHS COMPLIANT.

PART NUMBER	POWDERCOAT COLOR
RSV5280B	BLACK
RSV5280W	EATON WHITE

REV	REV. DATE	REV'D BY	CURRENT REVISION DESCRIPTION	ECN OR EPR NUMBER
A	04/02/16	HJost	CHNG RSHPSKITxx TO RSHPOKITxx,RSPDUMTGx TO 1X, ADD HOLE PLUG,COMP UPDATES	ECO-100383

THIS DRAWING CONTAINS PROPRIETARY INFORMATION AND IS LOANED SUBJECT TO RETURN UPON DEMAND AND UPON THE EXPRESS CONDITION THAT IT WILL NOT BE USED IN ANY WAY DETRIMENTAL TO THE INTEREST OF EATON CORPORATION

DRAWN IN THIRD ANGLE PROJECTION

TOLERANCE UNLESS SPEC'D .XX± .02 .XXX± .005 ∠ ±

ALL DIMENSIONS IN INCHES

CAGE NUMBER: 81824

DESIGN MGMT SITE: Worcester

MATERIAL:

MATERIAL FINISH:

SPEC #

ORIG EPR:
DES. BY HJost 09/01/15
DRWN. BY HJost 09/01/15
PROD GRP 33
COLOR:
CRS GA:
OTHER:

EATON

ASM,ENCLOSURE,52U, 800mm W x 1000mm D
HIGH FLOW CONFIG

SHEET: 4 OF 7 REV DATE: 04/02/16

D | RSV5280X | REV | A

RELEASE STATUS
Production

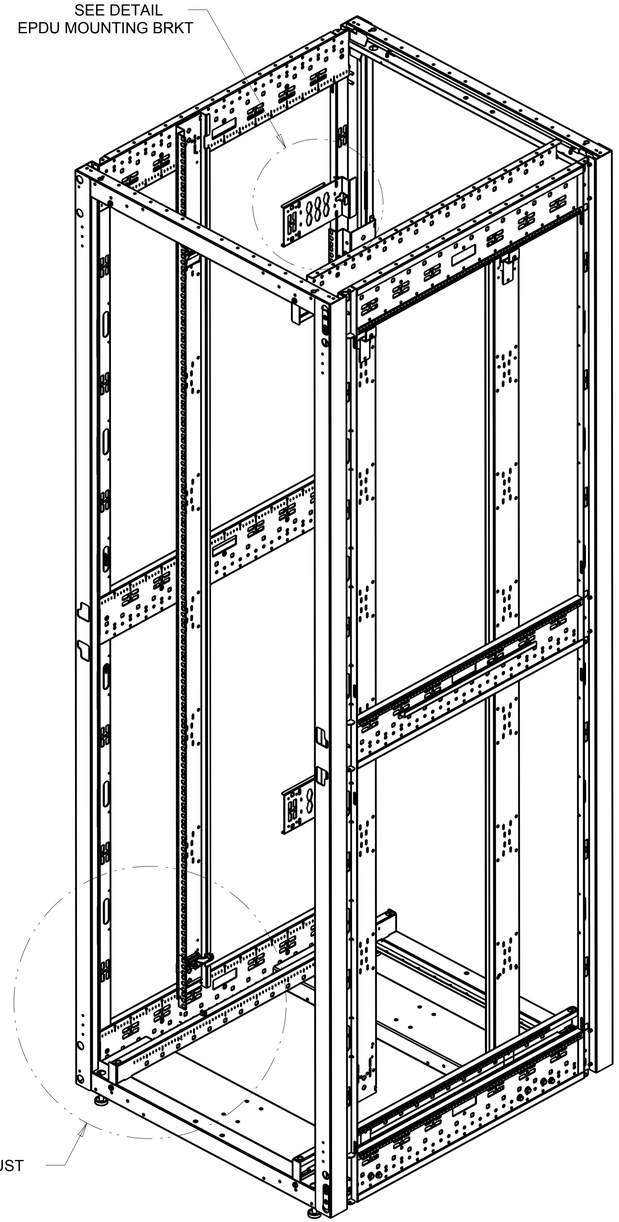

DETAIL EPDU MOUNTING BRKT
SCALE 0.450

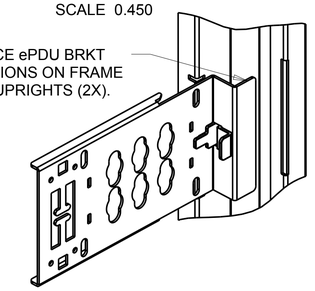

DETAIL RAIL ADJUST
SCALE 0.450

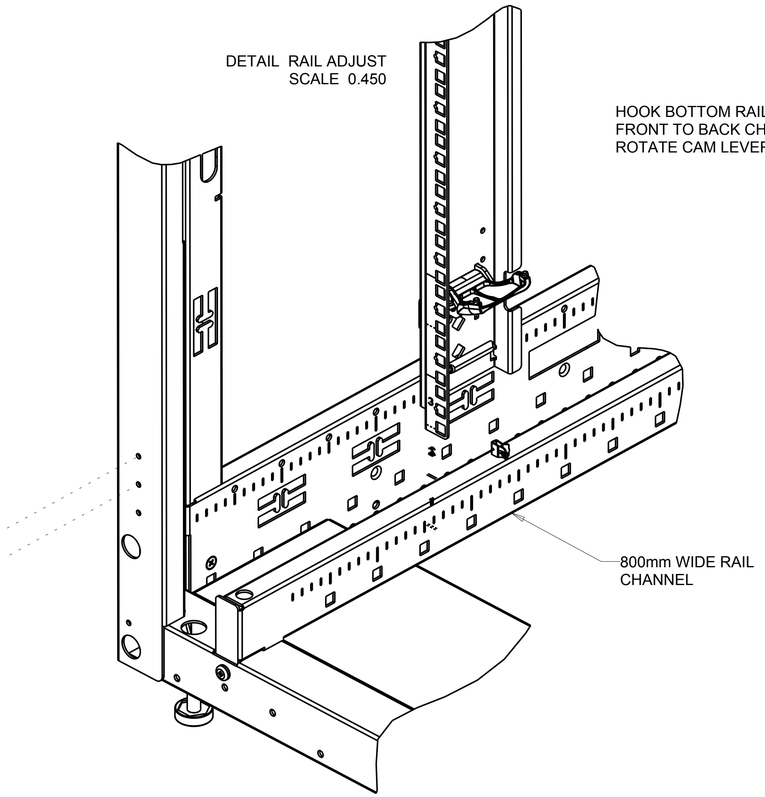

GENERAL NOTES:
1. ALL DIMENSIONS ARE IN INCHES UNLESS OTHERWISE NOTED. DUAL DIMENSIONS ARE SHOWN AS INCH (MILLIMETERS); I.E: PRIMARY (SECONDARY).
2. METRIC TOLERANCES: O PLACE DECIMAL IS ± .5MM; 1 PLACE DECIMAL IS ± .13MM
3. ALL FABRICATION MATERIALS SHALL BE RoHS COMPLIANT.

PART NUMBER	POWDERCOAT COLOR
RSV5280B	BLACK
RSV5280W	EATON WHITE

REV	REV. DATE	REV'D BY	CURRENT REVISION DESCRIPTION	ECN OR EPR NUMBER
A	04/02/16	HJost	CHNG RSHPSKITxx TO RSHPOKITxx,RSPDUMTGx TO 1X, ADD HOLE PLUG,COMP UPDATES	ECO-100383

THIS DRAWING CONTAINS PROPRIETARY INFORMATION AND IS LOANED SUBJECT TO RETURN UPON DEMAND AND UPON THE EXPRESS CONDITION THAT IT WILL NOT BE USED IN ANY WAY DETRIMENTAL TO THE INTEREST OF EATON CORPORATION

DRAWN IN THIRD ANGLE PROJECTION

TOLERANCE UNLESS SPEC'D
.XX± .02
.XXX± .005
∠ ± 1°
ALL DIMENSIONS IN INCHES

CAGE NUMBER:	81824
DESIGN MGMT SITE:	Worcester
MATERIAL:	
MATERIAL FINISH:	
SPEC #	

ORIG EPR:		
DES. BY	HJost	09/01/15
DRWN. BY	HJost	09/01/15
PROD GRP	33	
COLOR:		
CRS GA:		
OTHER:		

EATON

ASM,ENCLOSURE,52U, 800mm W x 1000mm D
HIGH FLOW CONFIG

SHEET: 5 OF 7	REV DATE: 04/02/16		
D	RSV5280X	REV	A

RELEASE STATUS
Production

GENERAL NOTES:
1. ALL DIMENSIONS ARE IN INCHES UNLESS OTHERWISE NOTED. DUAL DIMENSIONS ARE SHOWN AS INCH (MILLIMETERS); I.E: PRIMARY (SECONDARY).
2. METRIC TOLERANCES: O PLACE DECIMAL IS ± .5MM; 1 PLACE DECIMAL IS ± .13MM
3. ALL FABRICATION MATERIALS SHALL BE RoHS COMPLIANT.

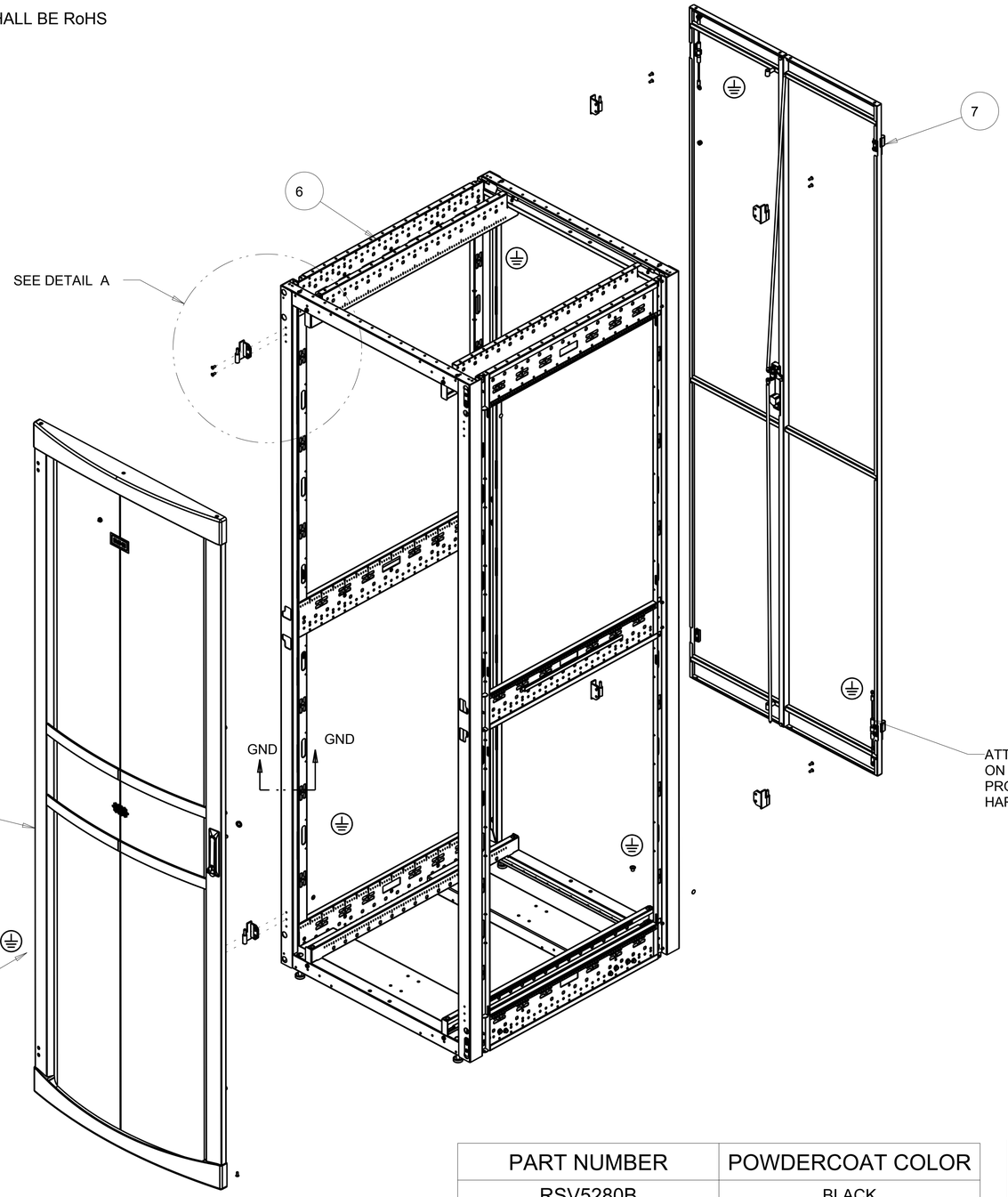

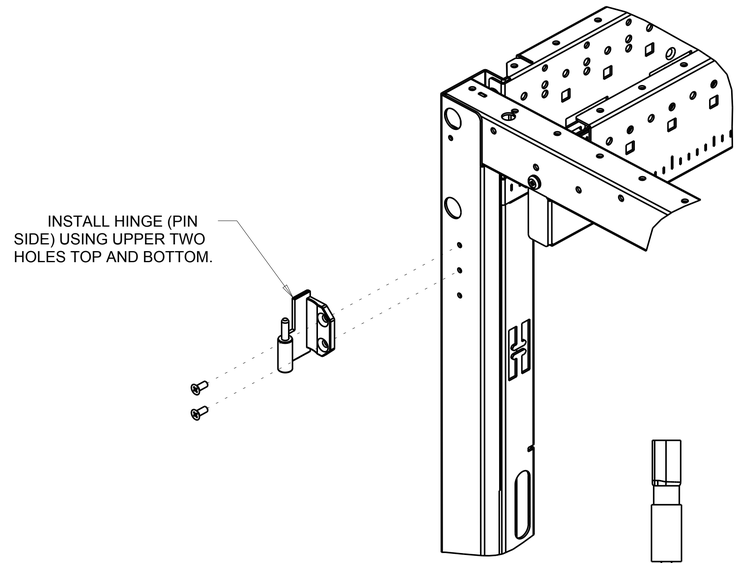

DETAIL A
SCALE 0.400

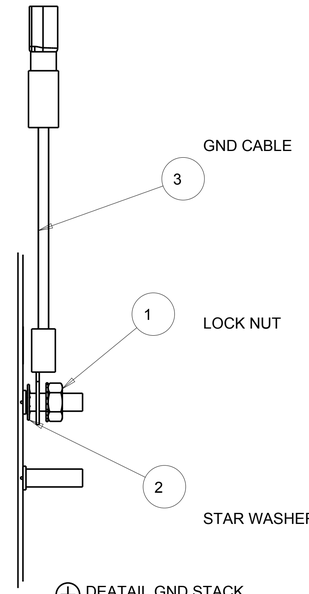

DEATAIL GND STACK
SCALE 1.00

BALLOON REFERENCE ONLY - SEE SHEET 2 FOR ACTUAL BOM

ITEM	TYPE	DOCUMENT #	DESCRIPTION	QTY
7	PR	RSSDPS528X	ASY, REAR DOOR, 800 mm W X 52U H	1
6	PR	RSFM5280X	ASM-FRAME, 52U, 800mm W x 1000mm	1
5	PR	105508	LABEL, GROUND SYMBOL, .50 DIA	4
4	MA	RSFDPS528LX	ASSEMBLY - FULL DOOR, LH, 52U X 800MM	1
3	CP	96020-P2	GROUND CABLE - 9.0"	1
2	CP	59588	LOCK WASHER	1
1	CP	18209	KEP NUT, HEX,1/4-20 NICKEL	1

PART NUMBER	POWDERCOAT COLOR
RSV5280B	BLACK
RSV5280W	EATON WHITE

REV	REV. DATE	REV'D BY	CURRENT REVISION DESCRIPTION	ECN OR EPR NUMBER
A	04/02/16	HJost	CHNG RSHPSKITxx TO RSHPOKITxx,RSPDUMTGx TO 1X, ADD HOLE PLUG,COMP UPDATES	ECO-100383

THIS DRAWING CONTAINS PROPRIETARY INFORMATION AND IS LOANED SUBJECT TO RETURN UPON DEMAND AND UPON THE EXPRESS CONDITION THAT IT WILL NOT BE USED IN ANY WAY DETRIMENTAL TO THE INTEREST OF EATON CORPORATION

DRAWN IN THIRD ANGLE PROJECTION

TOLERANCE UNLESS SPEC'D .XX± .02 .XXX± .005 ∠ ± 1°

ALL DIMENSIONS IN INCHES

CAGE NUMBER: 81824

DESIGN MGMT SITE: Worcester

MATERIAL:

MATERIAL FINISH:

SPEC #

ORIG EPR:

DES. BY HJost 09/01/15

DRWN. BY HJost 09/01/15

PROD GRP 33

COLOR:

CRS GA:

OTHER:

EATON

ASM,ENCLOSURE,52U, 800mm W x 1000mm D
HIGH FLOW CONFIG

SHEET: 6 OF 7

REV DATE: 04/02/16

D | RSV5280X | REV | A

RELEASE STATUS
Production

ASSEMBLE TO FRAME, ALIGN PILOT PINS TO HOLES IN FRONT TO BACK CHANNELS, ROTATE DOWN AND SECURE WITH PLASTIC LATCH

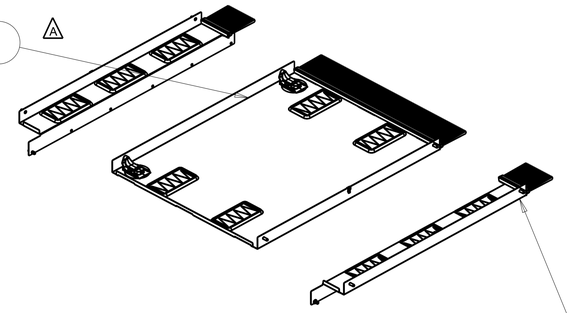

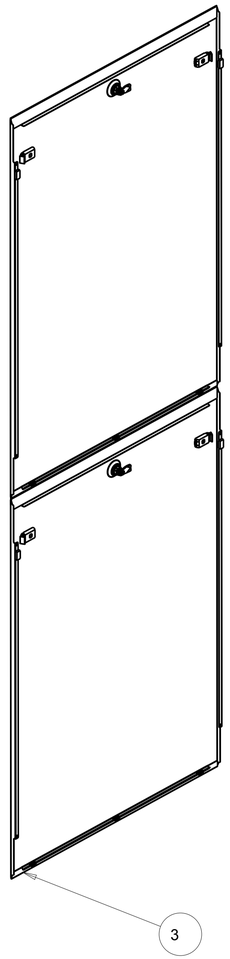

INSTALL SIDE PANELS, ALIGN PEM PILOTS WITH HOLES ON FRONT TO BACK CHANNELS, SECURE INSIDE WITH NYLATCH RIVET (4X)

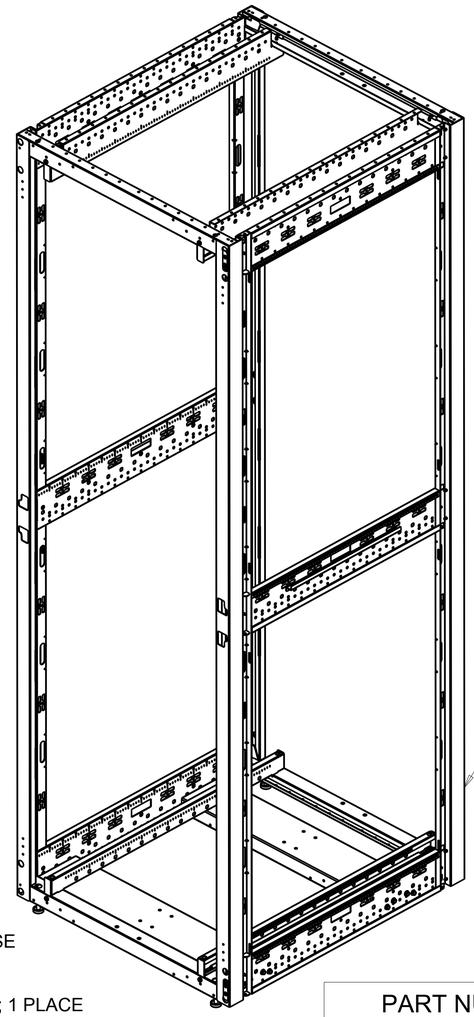

BRUSH STRIP , 800 ENCLOSURE SIDE
100mm X 100mm (2X)

800 WIDE ENCLOSURE SIDE PANEL, (100mm X 900mm) (2X)

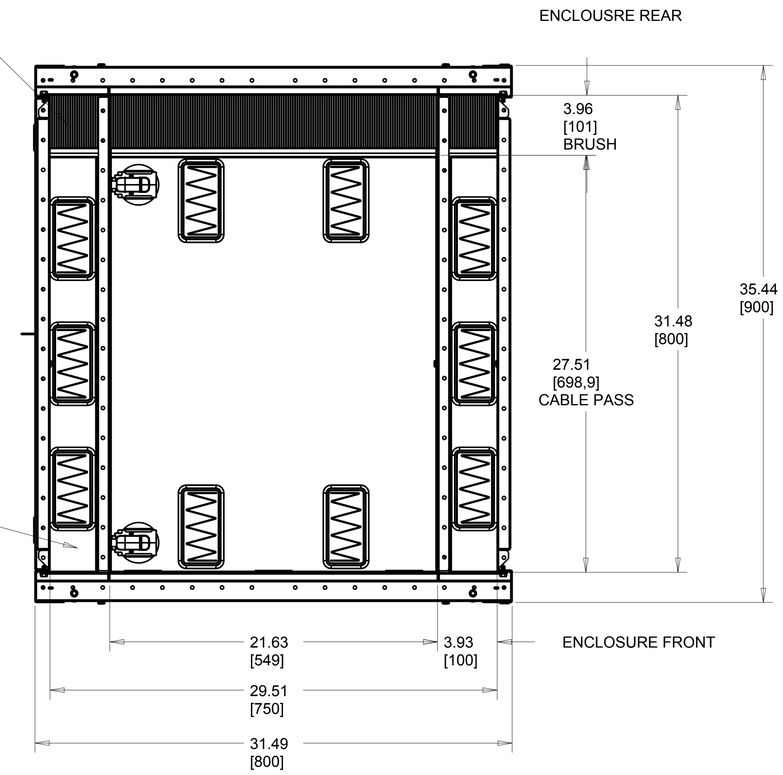

TOP VIEW - PANEL PLACEMENT
SCALE 0.200

BALLOON REFERENCE ONLY - SEE SHEET 2 FOR ACTUAL BOM

ITEM	TYPE	DOCUMENT #	DESCRIPTION	QTY
3	PR	RSSP520X	KIT- SIDE PANEL,52U,1000mm, SOLID, 2 PC	1
2	PR	RSHPOKIT80X	PANEL, CONFIG-SNGL PNL, CBL PASS	1
1	PR	RSFM5280X	ASM-FRAME, 52U, 800mm W x 1000mm	1

GENERAL NOTES:
1. ALL DIMENSIONS ARE IN INCHES UNLESS OTHERWISE NOTED. DUAL DIMENSIONS ARE SHOWN AS INCH (MILLIMETERS); I.E: PRIMARY (SECONDARY).
2. METRIC TOLERANCES: O PLACE DECIMAL IS ± .5MM; 1 PLACE DECIMAL IS ± .13MM
3. ALL FABRICATION MATERIALS SHALL BE RoHS COMPLIANT.

PART NUMBER	POWDERCOAT COLOR
RSV5280B	BLACK
RSV5280W	EATON WHITE

REV	REV. DATE	REV'D BY	CURRENT REVISION DESCRIPTION	ECN OR EPR NUMBER
A	04/02/16	HJost	CHNG RSHPSKITxx TO RSHPOKITxx,RSPDUMTGx TO 1X, ADD HOLE PLUG,COMP UPDATES	ECO-100383

THIS DRAWING CONTAINS PROPRIETARY INFORMATION AND IS LOANED SUBJECT TO RETURN UPON DEMAND AND UPON THE EXPRESS CONDITION THAT IT WILL NOT BE USED IN ANY WAY DETRIMENTAL TO THE INTEREST OF EATON CORPORATION

DRAWN IN THIRD ANGLE PROJECTION

TOLERANCE UNLESS SPEC'D
XX± .02
.XXX± .005
∠ ± 1°
ALL DIMENSIONS IN INCHES

CAGE NUMBER: 81824

ORIG EPR:		
DES. BY	HJost	09/01/15
DRWN. BY	HJost	09/01/15
DESIGN MGMT SITE: Worcester	PROD GRP 33	
	COLOR:	
MATERIAL:	CRS GA:	
	OTHER:	
MATERIAL FINISH:		
SPEC #		

EATON

ASM,ENCLOSURE,52U, 800mm W x 1000mm D
HIGH FLOW CONFIG

SHEET: 7 OF 7 | REV DATE: 04/02/16

D	RSV5280X	REV	A