RELEASE STATUS
Production

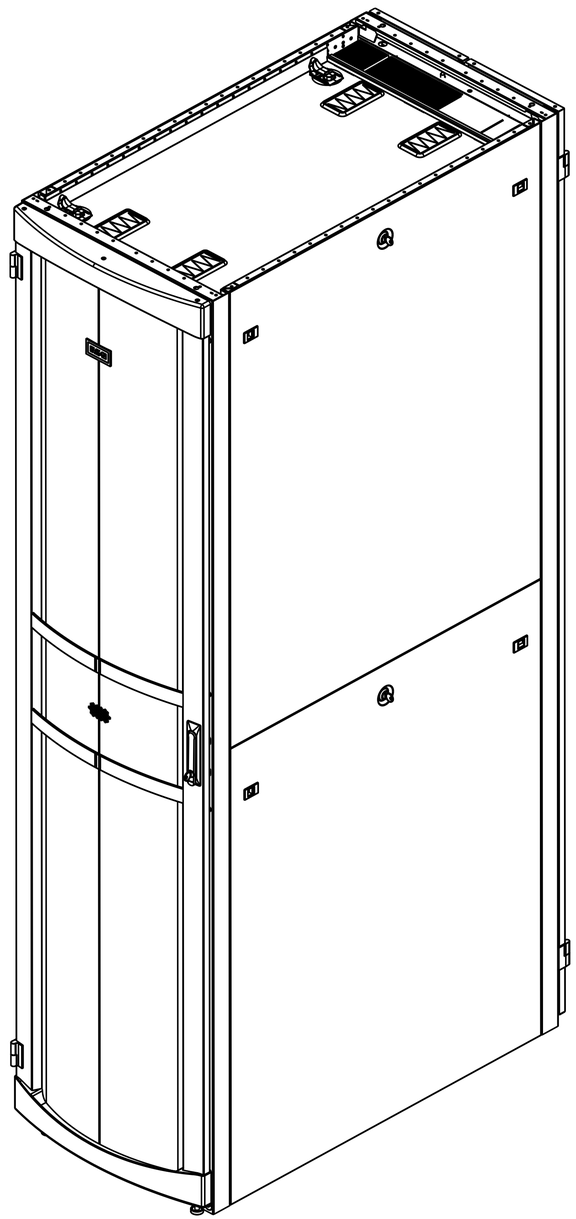

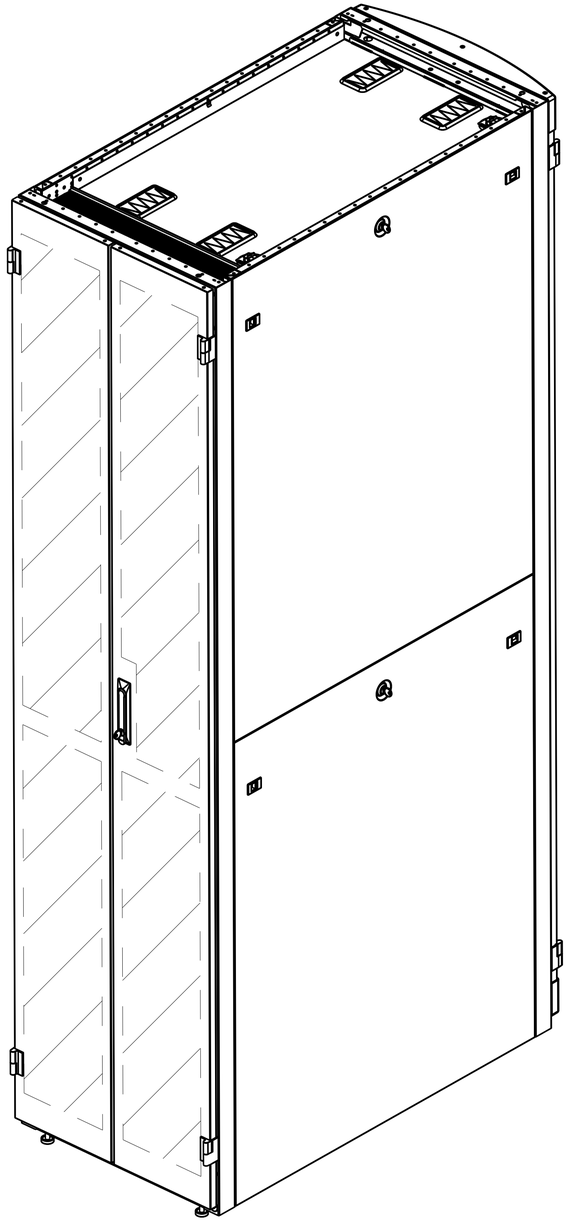

SHIPPING WEIGHT: 355 LB

GENERAL NOTES:
1. ALL DIMENSIONS ARE IN INCHES UNLESS OTHERWISE NOTED. DUAL DIMENSIONS ARE SHOWN AS INCH (MILLIMETERS); I.E: PRIMARY (SECONDARY).
2. METRIC TOLERANCES: O PLACE DECIMAL IS ± .5MM; 1 PLACE DECIMAL IS ± .13MM
3. ALL FABRICATION MATERIALS SHALL BE RoHS COMPLIANT.

PART NUMBER	POWDERCOAT COLOR
RSV5262B	BLACK
RSV5262W	EATON WHITE

REV	REV. DATE	REV'D BY	CURRENT REVISION DESCRIPTION	ECN OR EPR NUMBER
A	04/02/16	HJost	CHNG RSHPSKITxx TO RSHPOKITxx,RSPDUMTGx TO 1X, ADD HOLE PLUG,COMP UPDATES	ECO-100383

THIS DRAWING CONTAINS PROPRIETARY INFORMATION AND IS LOANED SUBJECT TO RETURN UPON DEMAND AND UPON THE EXPRESS CONDITION THAT IT WILL NOT BE USED IN ANY WAY DETRIMENTAL TO THE INTEREST OF EATON CORPORATION

DRAWN IN THIRD ANGLE PROJECTION

TOLERANCE UNLESS SPEC'D
.XX± .02
.XXX± .005
∠ ± 1°
ALL DIMENSIONS IN INCHES

CAGE NUMBER:	81824
DESIGN MGMT SITE:	Worcester
MATERIAL:	
MATERIAL FINISH:	
SPEC #	

ORIG EPR:		
DES. BY	HJost	09/01/15
DRWN. BY	HJost	09/01/15
PROD GRP	33	
COLOR:		
CRS GA:		
OTHER:		

EATON

ASM,ENCLOSURE,52U, 600mm W x 1200mm D
HIGH FLOW CONFIG

SHEET:	REV DATE:
1 OF 7	04/02/16

D	RSV5262X	REV	A

RELEASE STATUS
Production

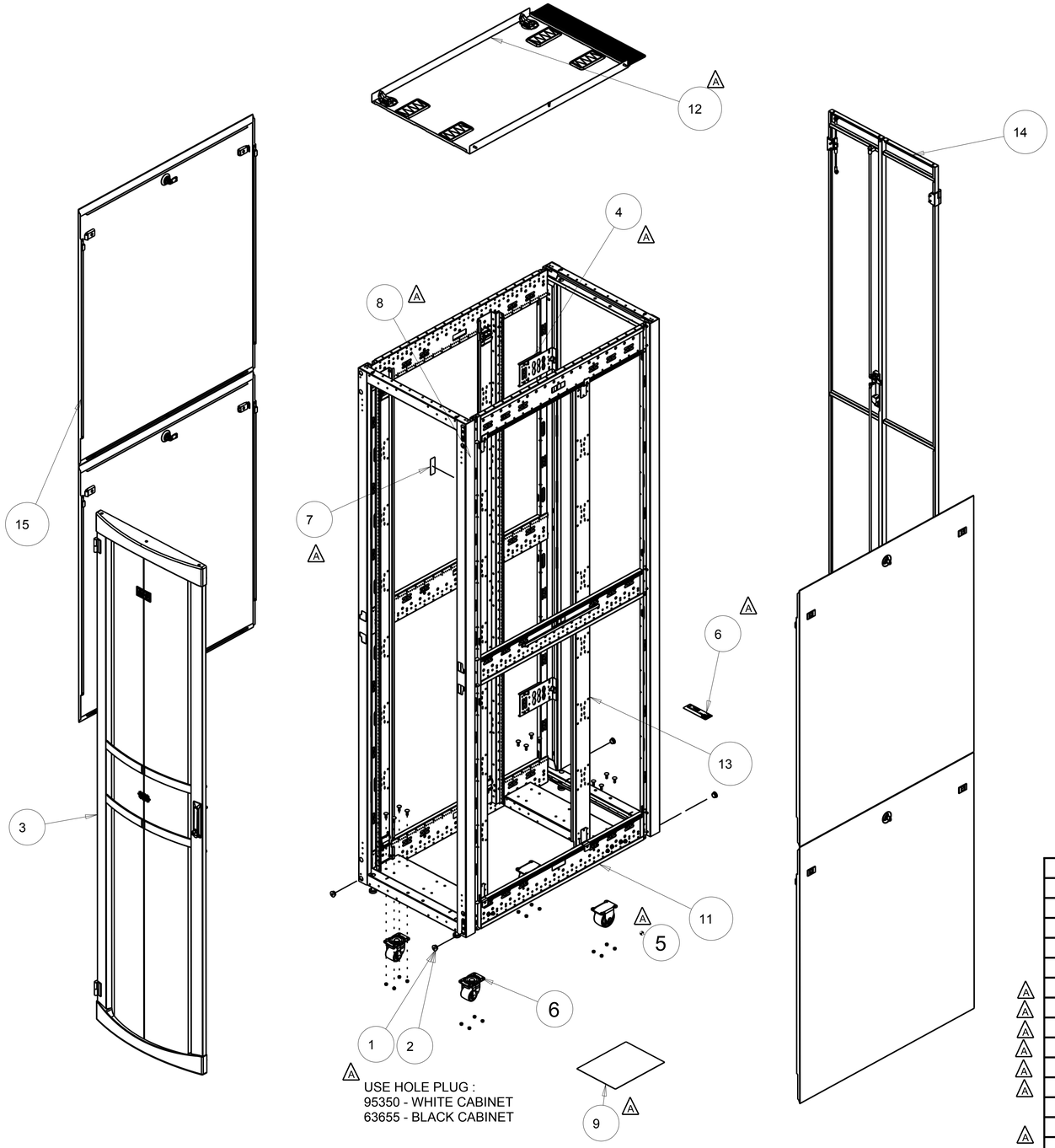

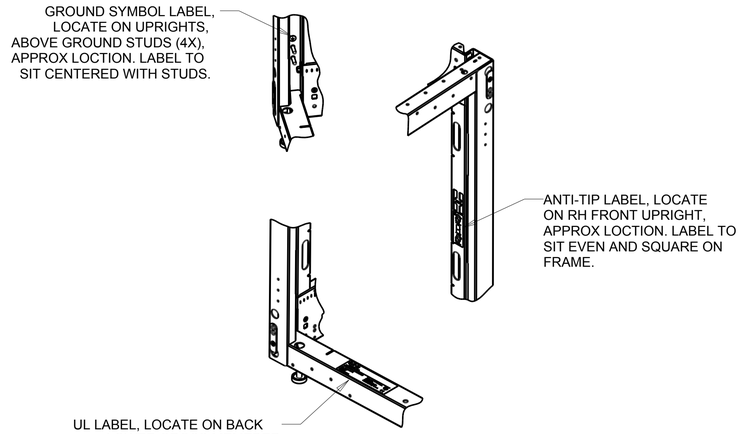

△A LABEL LOCATION DETAILS

△A USE HOLE PLUG :
95350 - WHITE CABINET
63655 - BLACK CABINET

ITEM	TYPE	DOCUMENT #	DESCRIPTION	QTY
15	PR	RSSP522X	KIT- SIDE PANEL,52U,1200mm, SOLID, 2 PC	2
14	PR	RSSDPS526X	ASY, REAR DOOR, 600 mm W X 52U H	1
13	PR	RSRSQ52X	ASM-RACK RAIL, 4 - 19"EIA , 52U, .375 SQ HOLES	1
12	PR	RSHPOKIT62X	PANEL, CONFIG-SNGL PNL, CBL PASS	1
11	PR	RSFM5262X	ASM-FRAME, 52U, 600mm W x 1200mm	1
10	PR	RSCSTRKIT	KIT- CASTERS, 3.26 H , 800 LB CAPACITY	1
△A 9	PR	IL159003EN	INSTALLATION NOTE, MAIN	1
△A 8	PR	105508	LABEL, GROUND SYMBOL, .50 DIA	4
△A 7	PR	105507	LABEL, ANTI-TIP	1
△A 6	PR	105505	LABEL- UL LIST (2416)	1
△A 5	PR	71211	PACKAGING, 600mm, MED DUTY, W / MTG BRKT-HRDWRE	1
△A 4	MP	RSPDUMTGX	ASM- BRKT e-PDU MTG , SINGLE CABLE MNGT △A	1
3	MA	RSFDPS526LX	ASSEMBLY - FULL DOOR, LH, 5U X 600MM	1
△A 2	CP	95350	3/4" HOLE PLUG, WHITE	4
1	CP	63655	HOLE PLUG, 0.750	4

GENERAL NOTES:
1. ALL DIMENSIONS ARE IN INCHES UNLESS OTHERWISE NOTED. DUAL DIMENSIONS ARE SHOWN AS INCH (MILLIMETERS); I.E: PRIMARY (SECONDARY).
2. METRIC TOLERANCES: O PLACE DECIMAL IS ± .5MM; 1 PLACE DECIMAL IS ± .13MM
3. ALL FABRICATION MATERIALS SHALL BE RoHS COMPLIANT.

PART NUMBER	POWDERCOAT COLOR
RSV5262B	BLACK
RSV5262W	EATON WHITE

REV	REV. DATE	REV'D BY	CURRENT REVISION DESCRIPTION	ECN OR EPR NUMBER
A	04/02/16	HJost	CHNG RSHPSKITxx TO RSHPOKITxx,RSPDUMTGx TO 1X, ADD HOLE PLUG,COMP UPDATES	ECO-100383

THIS DRAWING CONTAINS PROPRIETARY INFORMATION AND IS LOANED SUBJECT TO RETURN UPON DEMAND AND UPON THE EXPRESS CONDITION THAT IT WILL NOT BE USED IN ANY WAY DETRIMENTAL TO THE INTEREST OF EATON CORPORATION

DRAWN IN THIRD ANGLE PROJECTION

TOLERANCE UNLESS SPEC'D .XX± .02 .XXX± .005 ∠ ± 1°
ALL DIMENSIONS IN INCHES

CAGE NUMBER: 81824
DESIGN MGMT SITE: Worcester
MATERIAL:
MATERIAL FINISH:
SPEC #

ORIG EPR:
DES. BY HJost 09/01/15
DRWN. BY HJost 09/01/15
PROD GRP 33
COLOR:
CRS GA:
OTHER:

EATON

ASM,ENCLOSURE,52U, 600mm W x 1200mm D
HIGH FLOW CONFIG

SHEET: 2 OF 7 | REV DATE: 04/02/16

D	RSV5262X	REV	A

RELEASE STATUS
Production

SECTION B-B

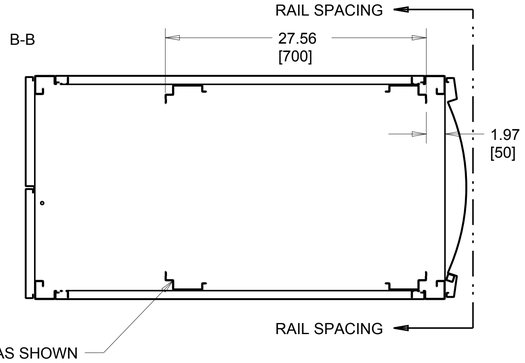

DETAIL EIA RAIL SPACING

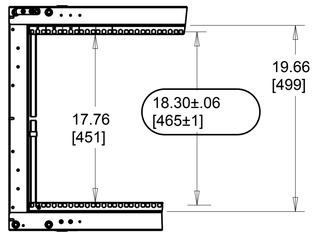

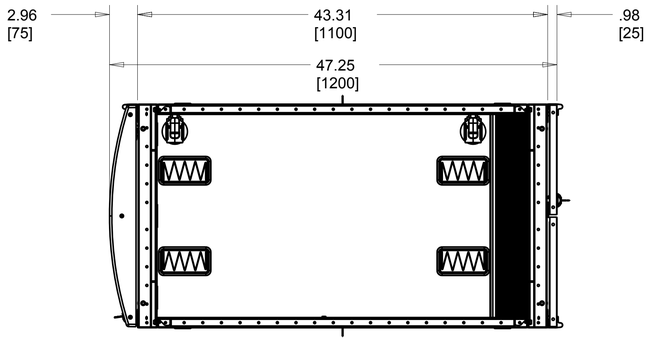

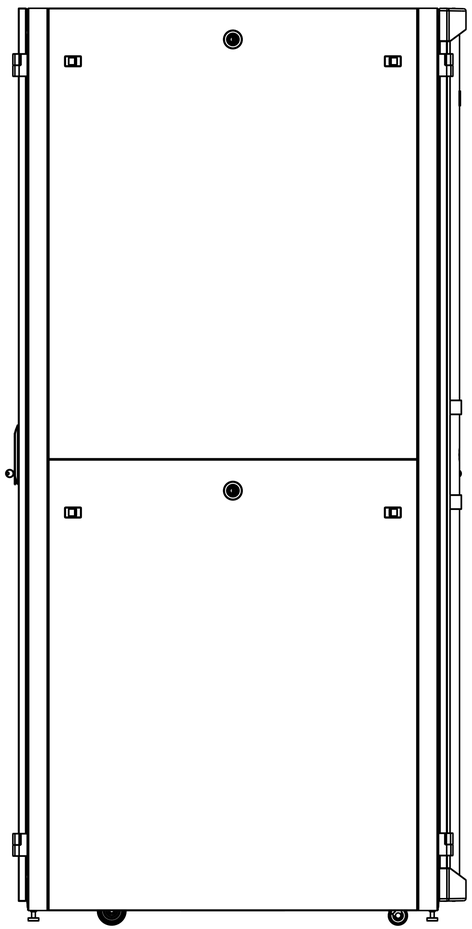

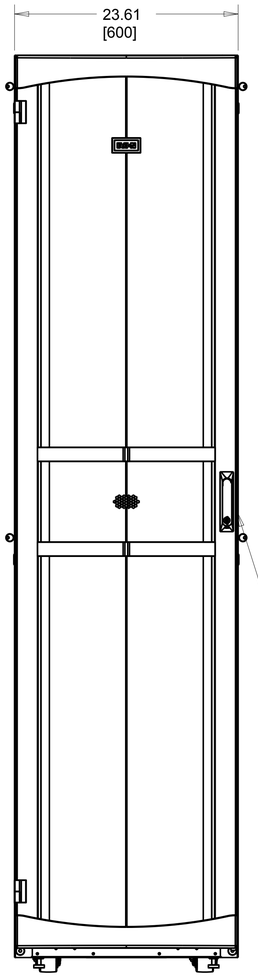

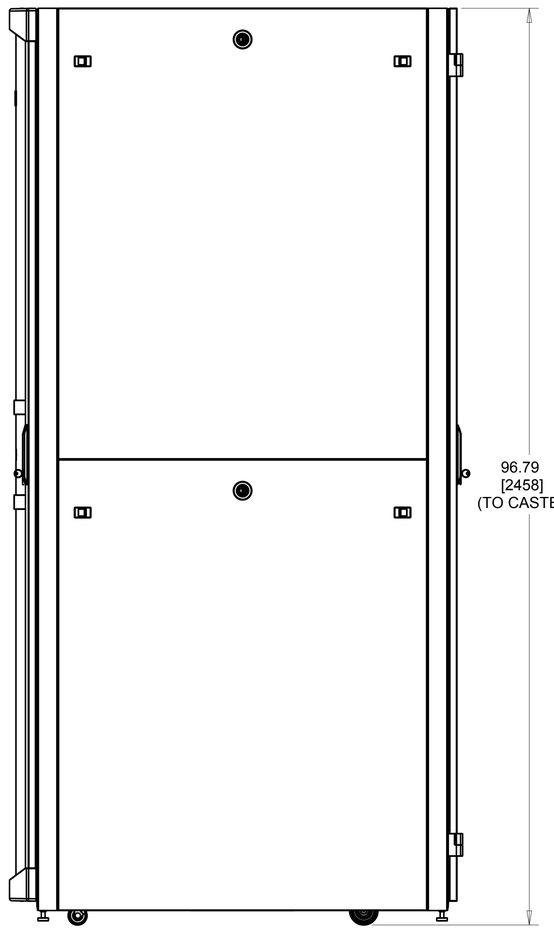

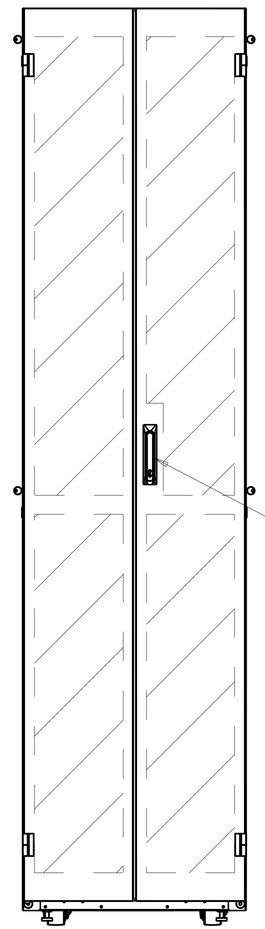

GENERAL NOTES:
1. ALL DIMENSIONS ARE IN INCHES UNLESS OTHERWISE NOTED. DUAL DIMENSIONS ARE SHOWN AS INCH (MILLIMETERS); I.E: PRIMARY (SECONDARY).
2. METRIC TOLERANCES: O PLACE DECIMAL IS ± .5MM; 1 PLACE DECIMAL IS ± .13MM
3. ALL FABRICATION MATERIALS SHALL BE RoHS COMPLIANT.

PART NUMBER	POWDERCOAT COLOR
RSV5262B	BLACK
RSV5262W	EATON WHITE

REV	REV. DATE	REV'D BY	CURRENT REVISION DESCRIPTION	ECN OR EPR NUMBER
A	04/02/16	HJost	CHNG RSHPSKITxx TO RSHPOKITxx,RSPDUMTGx TO 1X, ADD HOLE PLUG,COMP UPDATES	ECO-100383

THIS DRAWING CONTAINS PROPRIETARY INFORMATION AND IS LOANED SUBJECT TO RETURN UPON DEMAND AND UPON THE EXPRESS CONDITION THAT IT WILL NOT BE USED IN ANY WAY DETRIMENTAL TO THE INTEREST OF EATON CORPORATION

DRAWN IN THIRD ANGLE PROJECTION

TOLERANCE UNLESS SPEC'D
.XX± .02
.XXX± .005
∠ ± 1°
ALL DIMENSIONS IN INCHES

CAGE NUMBER: 81824
DESIGN MGMT SITE: Worcester
MATERIAL:
MATERIAL FINISH:
SPEC #

ORIG EPR:
DES. BY HJost 09/01/15
DRWN. BY HJost 09/01/15
PROD GRP 33
COLOR:
CRS GA:
OTHER:

EATON

ASM,ENCLOSURE,52U, 600mm W x 1200mm D
HIGH FLOW CONFIG

SHEET: 3 OF 7
REV DATE: 04/02/16

D	RSV5262X	REV	A

RELEASE STATUS
Production

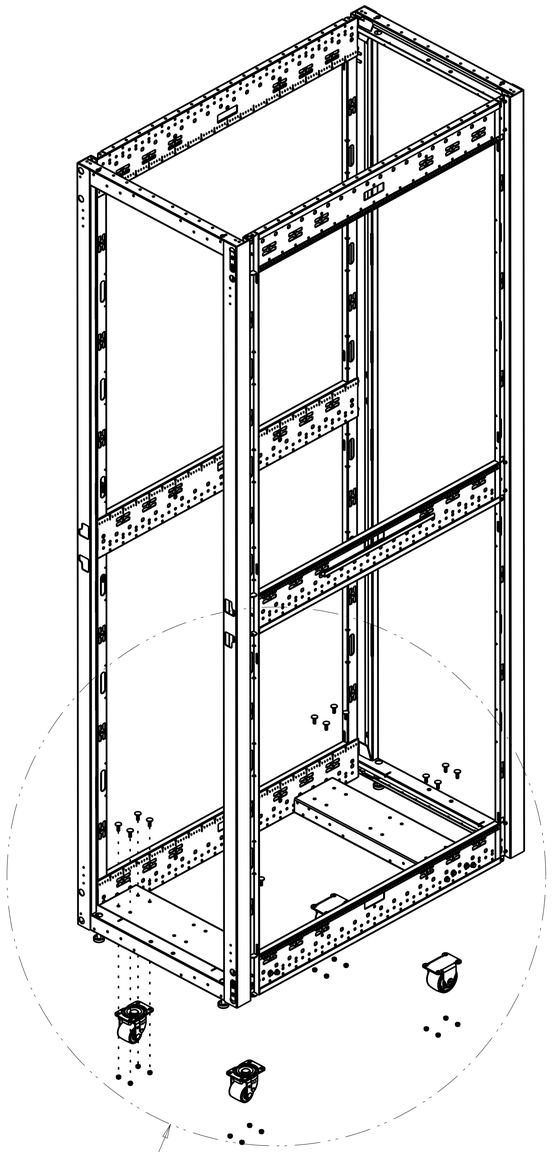

DETAIL CASTER ASSEMBLY
SCALE 0.250

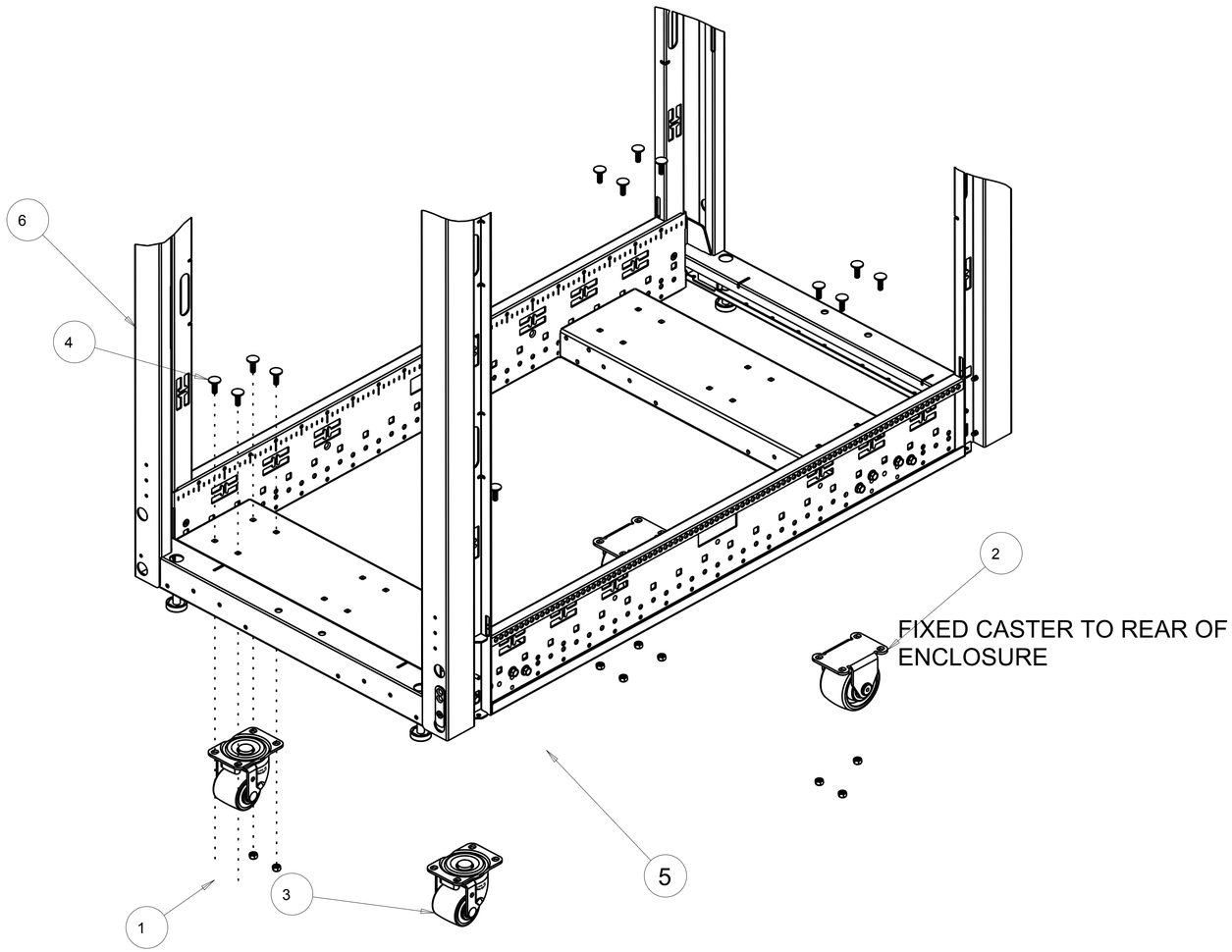

BALLOON REFERENCE ONLY - SEE SHEET 2 FOR ACTUAL BOM

ITEM	TYPE	DOCUMENT #	DESCRIPTION	QTY
6	PR	RSFM5262X	ASM-FRAME, 52U, 600mm W x 1200mm	1
5	PR	RSCSTRKIT	KIT- CASTERS, 3.26 H , 800 LB CAPACITY	1
4	CP	105334	BOLT, CARRIAGE, M6X1X20	16
3	CP	104014	CASTER, SWIVEL, 3.26" H, 800 LB	2
2	CP	104013	CASTER, RIGID, 3.26" H, 800 LB	2
1	CP	91504	LOCK NUT - M6 NYLON INSERT	16

GENERAL NOTES:
1. ALL DIMENSIONS ARE IN INCHES UNLESS OTHERWISE NOTED. DUAL DIMENSIONS ARE SHOWN AS INCH (MILLIMETERS); I.E: PRIMARY (SECONDARY).
2. METRIC TOLERANCES: O PLACE DECIMAL IS ± .5MM; 1 PLACE DECIMAL IS ± .13MM
3. ALL FABRICATION MATERIALS SHALL BE RoHS COMPLIANT.

PART NUMBER	POWDERCOAT COLOR
RSV5262B	BLACK
RSV5262W	EATON WHITE

REV	REV. DATE	REV'D BY	CURRENT REVISION DESCRIPTION	ECN OR EPR NUMBER
A	04/02/16	HJost	CHNG RSHPSKITxx TO RSHPOKITxx,RSPDUMTGx TO 1X, ADD HOLE PLUG,COMP UPDATES	ECO-100383

THIS DRAWING CONTAINS PROPRIETARY INFORMATION AND IS LOANED SUBJECT TO RETURN UPON DEMAND AND UPON THE EXPRESS CONDITION THAT IT WILL NOT BE USED IN ANY WAY DETRIMENTAL TO THE INTEREST OF EATON CORPORATION

DRAWN IN THIRD ANGLE PROJECTION

TOLERANCE UNLESS SPEC'D .XX± .02 .XXX± .005 ∠ ± 1° ALL DIMENSIONS IN INCHES

CAGE NUMBER: 81824

DESIGN MGMT SITE: Worcester

MATERIAL:

MATERIAL FINISH:

SPEC #

ORIG EPR:
DES. BY HJost 09/01/15
DRWN. BY HJost 09/01/15
PROD GRP 33
COLOR:
CRS GA:
OTHER:

EATON

ASM,ENCLOSURE,52U, 600mm W x 1200mm D
HIGH FLOW CONFIG

SHEET: 4 OF 7 REV DATE: 04/02/16

D | RSV5262X | REV | A

RELEASE STATUS
Production

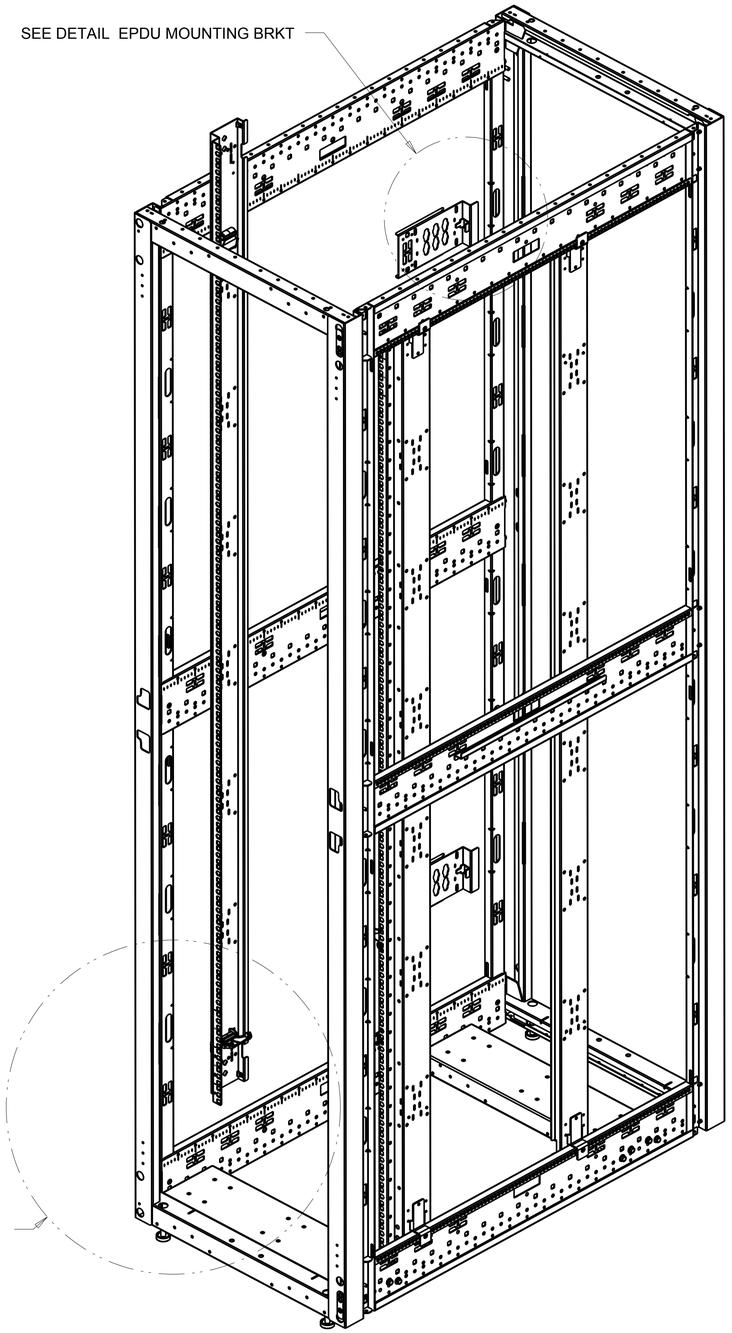

DETAIL EPDU MOUNTING BRKT
SCALE 0.400

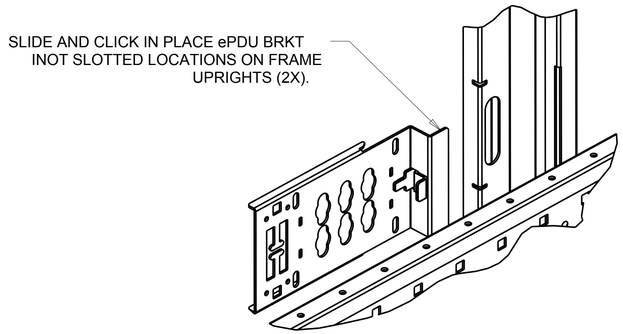

DETAIL RAIL ADJUST
SCALE 0.400

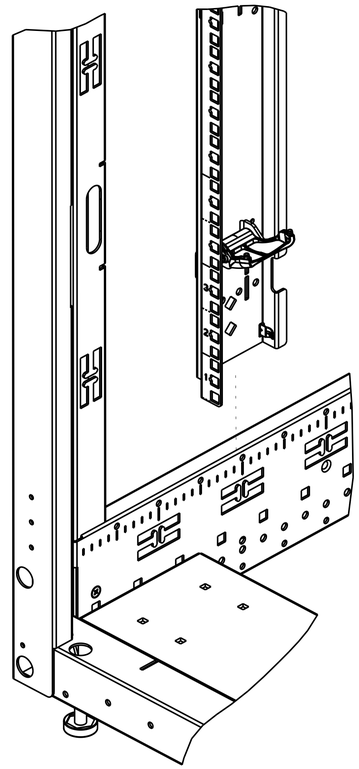

GENERAL NOTES:
1. ALL DIMENSIONS ARE IN INCHES UNLESS OTHERWISE NOTED. DUAL DIMENSIONS ARE SHOWN AS INCH (MILLIMETERS); I.E: PRIMARY (SECONDARY).
2. METRIC TOLERANCES: O PLACE DECIMAL IS ± .5MM; 1 PLACE DECIMAL IS ± .13MM
3. ALL FABRICATION MATERIALS SHALL BE RoHS COMPLIANT.

PART NUMBER	POWDERCOAT COLOR
RSV5262B	BLACK
RSV5262W	EATON WHITE

REV	REV. DATE	REV'D BY	CURRENT REVISION DESCRIPTION	ECN OR EPR NUMBER
A	04/02/16	HJost	CHNG RSHPSKITxx TO RSHPOKITxx,RSPDUMTGx TO 1X, ADD HOLE PLUG,COMP UPDATES	ECO-100383

THIS DRAWING CONTAINS PROPRIETARY INFORMATION AND IS LOANED SUBJECT TO RETURN UPON DEMAND AND UPON THE EXPRESS CONDITION THAT IT WILL NOT BE USED IN ANY WAY DETRIMENTAL TO THE INTEREST OF EATON CORPORATION

DRAWN IN THIRD ANGLE PROJECTION

TOLERANCE UNLESS SPEC'D
.XX± .02
.XXX± .005
∠ ± 1°
ALL DIMENSIONS IN INCHES

CAGE NUMBER: 81824

DESIGN MGMT SITE: Worcester

MATERIAL:

MATERIAL FINISH:

SPEC #

ORIG EPR:
DES. BY HJost 09/01/15
DRWN. BY HJost 09/01/15
PROD GRP 33
COLOR:
CRS GA:
OTHER:

EATON

ASM,ENCLOSURE,52U, 600mm W x 1200mm D
HIGH FLOW CONFIG

SHEET: 5 OF 7
REV DATE: 04/02/16

D	RSV5262X	REV	A

RELEASE STATUS
Production

GENERAL NOTES:
1. ALL DIMENSIONS ARE IN INCHES UNLESS OTHERWISE NOTED. DUAL DIMENSIONS ARE SHOWN AS INCH (MILLIMETERS); I.E: PRIMARY (SECONDARY).
2. METRIC TOLERANCES: O PLACE DECIMAL IS ± .5MM; 1 PLACE DECIMAL IS ± .13MM
3. ALL FABRICATION MATERIALS SHALL BE RoHS COMPLIANT.

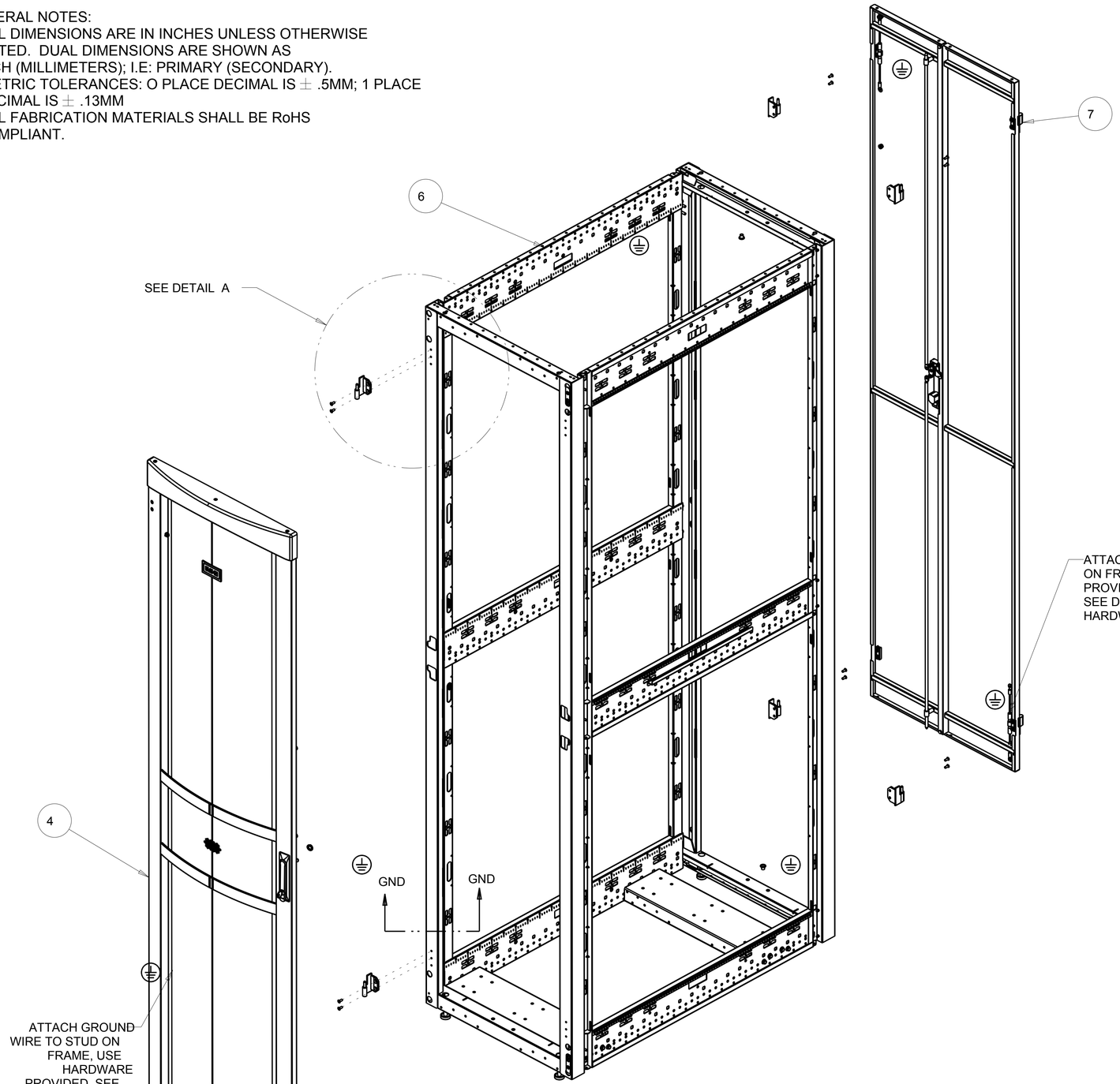

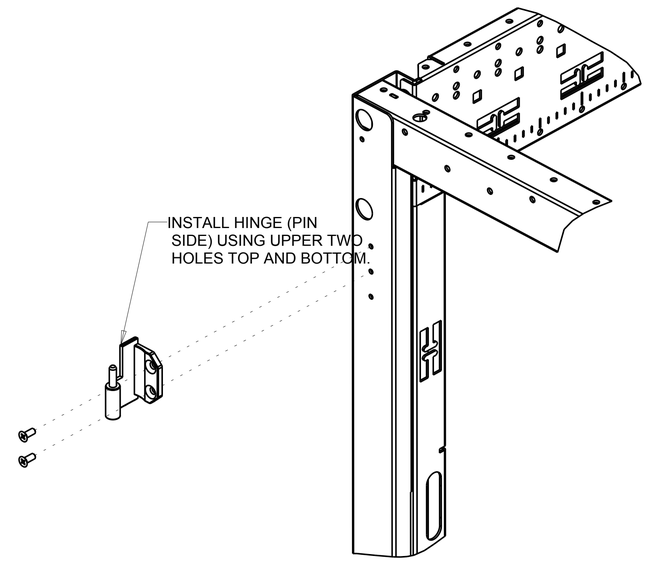

DETAIL A
SCALE 0.400

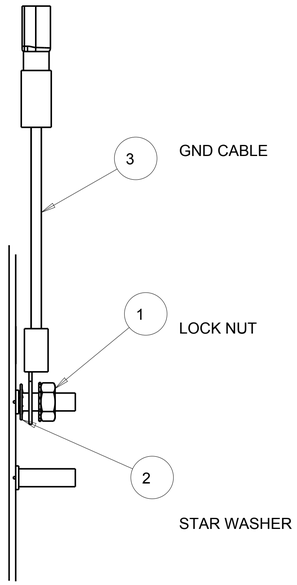

DEATAIL GND STACK
SCALE 1.00

BALLOON REFERENCE ONLY - SEE SHEET 2 FOR ACTUAL BOM

ITEM	TYPE	DOCUMENT #	DESCRIPTION	QTY
7	PR	RSSDPS526X	ASY, REAR DOOR, 600 mm W X 52U H	1
6	PR	RSFM5262X	ASM-FRAME, 52U, 600mm W x 1200mm	1
5	PR	105508	LABEL, GROUND SYMBOL, .50 DIA	4
4	MA	RSFDPS526LX	ASSEMBLY - FULL DOOR, LH, 5U X 600MM	1
3	CP	96020-P2	GROUND CABLE - 9.0"	1
2	CP	59588	LOCK WASHER	1
1	CP	18209	KEP NUT, HEX,1/4-20 NICKEL	1

PART NUMBER	POWDERCOAT COLOR
RSV5260B	BLACK
RSV5260W	EATON WHITE

REV	REV. DATE	REV'D BY	CURRENT REVISION DESCRIPTION	ECN OR EPR NUMBER
A	04/02/16	HJost	CHNG RSHPSKITxx TO RSHPOKITxx,RSPDUMTGx TO 1X, ADD HOLE PLUG,COMP UPDATES	ECO-100383

THIS DRAWING CONTAINS PROPRIETARY INFORMATION AND IS LOANED SUBJECT TO RETURN UPON DEMAND AND UPON THE EXPRESS CONDITION THAT IT WILL NOT BE USED IN ANY WAY DETRIMENTAL TO THE INTEREST OF EATON CORPORATION

DRAWN IN THIRD ANGLE PROJECTION

TOLERANCE UNLESS SPEC'D .XX± .02 .XXX± .005 ∠ ± 1°
ALL DIMENSIONS IN INCHES

CAGE NUMBER:	81824
DESIGN MGMT SITE:	Worcester
MATERIAL:	
MATERIAL FINISH:	
SPEC #	

ORIG EPR:		
DES. BY	HJost	09/01/15
DRWN. BY	HJost	09/01/15
PROD GRP	33	
COLOR:		
CRS GA:		
OTHER:		

EATON

ASM,ENCLOSURE,52U, 600mm W x 1200mm D
HIGH FLOW CONFIG

SHEET: 6 OF 7 | REV DATE: 04/02/16

SIZE	DRAWING NO.	REV	
D	RSV5262X	REV	A

RELEASE STATUS
Production

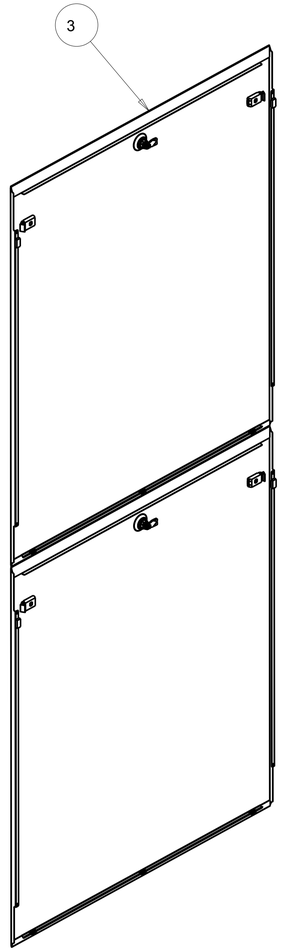

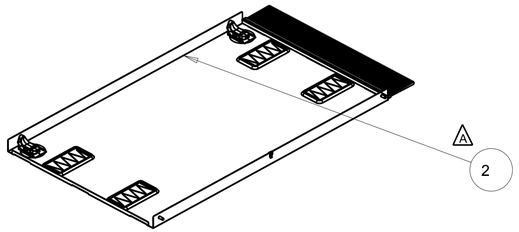

ASSEMBLE TO FRAME,
ALIGN PILOT PINS TO
HOLES IN FRONT TO BACK
CHANNELS, ROTATE DOWN
AND SECURE WITH
PLASTIC LATCH

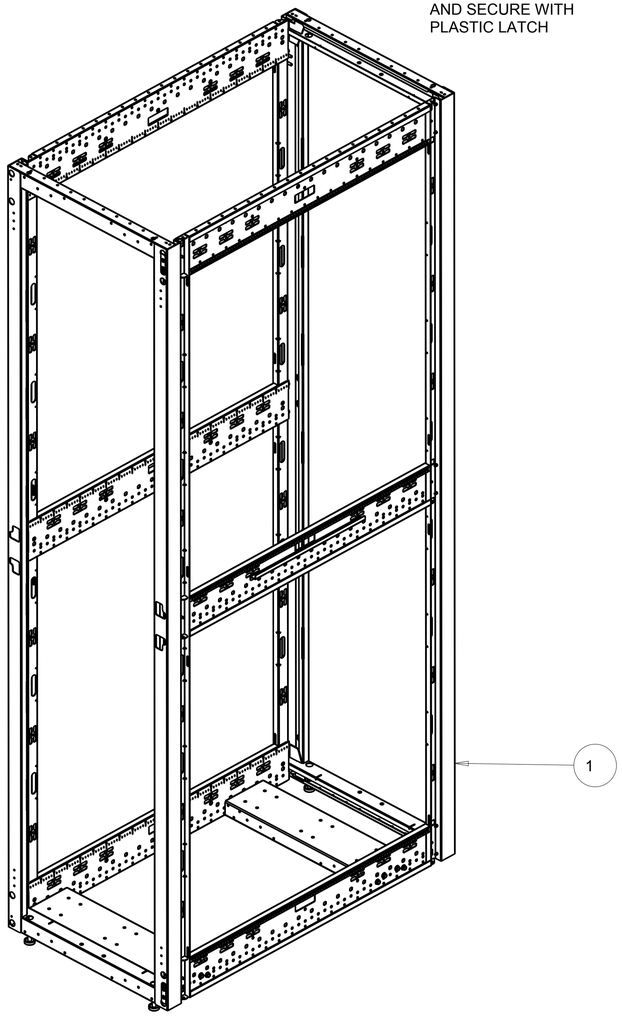

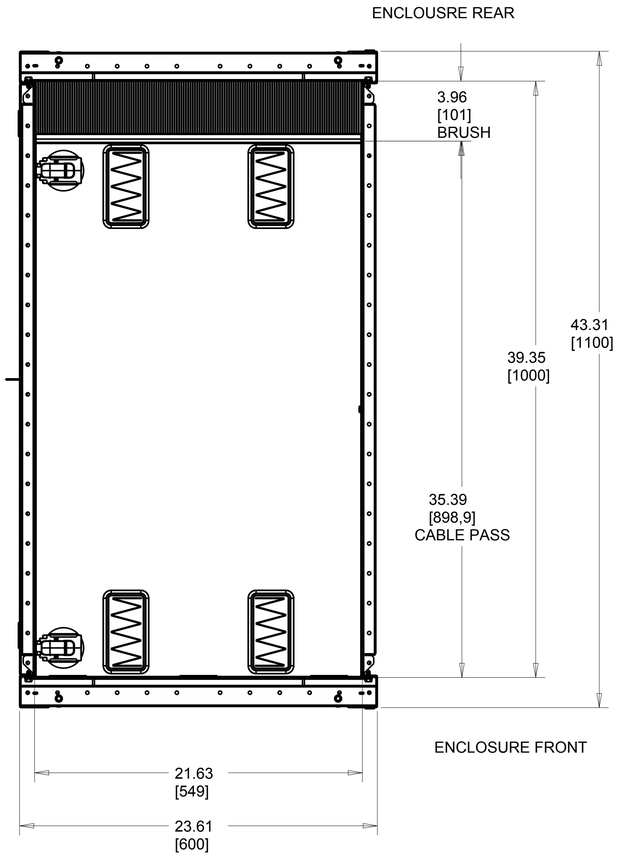

TOP VIEW - PANEL PLACEMENT
SCALE 0.200

BALLOON REFERENCE ONLY - SEE SHEET 2 FOR ACTUAL BOM

ITEM	TYPE	DOCUMENT #	DESCRIPTION	QTY
3	PR	RSSP522X	KIT- SIDE PANEL,52U,1200mm, SOLID, 2 PC	1
2	PR	RSHPOKIT62X	PANEL, CONFIG-SNGL PNL, CBL PASS	1
1	PR	RSFM5262X	ASM-FRAME, 52U, 600mm W x 1200mm	1

GENERAL NOTES:
1. ALL DIMENSIONS ARE IN INCHES UNLESS OTHERWISE NOTED. DUAL DIMENSIONS ARE SHOWN AS INCH (MILLIMETERS); I.E: PRIMARY (SECONDARY).
2. METRIC TOLERANCES: O PLACE DECIMAL IS ± .5MM; 1 PLACE DECIMAL IS ± .13MM
3. ALL FABRICATION MATERIALS SHALL BE RoHS COMPLIANT.

PART NUMBER	POWDERCOAT COLOR
RSV5262B	BLACK
RSV5262W	EATON WHITE

REV	REV. DATE	REV'D BY	CURRENT REVISION DESCRIPTION	ECN OR EPR NUMBER
A	04/02/16	HJost	CHNG RSHPSKITxx TO RSHPOKITxx,RSPDUMTGx TO 1X, ADD HOLE PLUG,COMP UPDATES	ECO-100383

THIS DRAWING CONTAINS PROPRIETARY INFORMATION AND IS LOANED SUBJECT TO RETURN UPON DEMAND AND UPON THE EXPRESS CONDITION THAT IT WILL NOT BE USED IN ANY WAY DETRIMENTAL TO THE INTEREST OF EATON CORPORATION

DRAWN IN THIRD ANGLE PROJECTION

TOLERANCE UNLESS SPEC'D
.XX± .02
.XXX± .005
∠ ± 1°
ALL DIMENSIONS IN INCHES

CAGE NUMBER: 81824

ORIG EPR:
DES. BY HJost 09/01/15
DRWN. BY HJost 09/01/15

DESIGN MGMT SITE: Worcester

PROD GRP 33
COLOR:
CRS GA:
OTHER:

MATERIAL:
MATERIAL FINISH:
SPEC #

EATON

ASM,ENCLOSURE,52U, 600mm W x 1200mm D
HIGH FLOW CONFIG

SHEET: 7 OF 7
REV DATE: 04/02/16

D	RSV5262X	REV	A