RS Enclosure



Powering Business Worldwide

Table of Contents

SECTION I

About this Guide **2**
Contact Information. **2**
Before You Begin **3**
Safety Warnings and Precautions **3**
Enclosure Capacity **3**

SECTION II

Unpacking, Off-Loading, Moving Enclosures **4**
Unlocking, Opening Doors, Grounding & Bonding Instructions, Main Protective Grounding, ... **5**
Bonding of Doors and Panels, Auto Bonding **6**
Removing Doors & Side Panels **6**
Leveling, Anchoring, & Stabilizing **7**

SECTION III

Baying Adjacent Enclosures **8**
Equipment Rail Installation & Removal **8**
Cage Nuts **9**
PDU Installation. **9**
Horizontal Panels. **10**
Reversing Doors **10**
Handle Reversal. **11**
Cable Management. **12**
Disclaimer of Warranties and Limitations of Liability. **12**

About this Guide

This document is intended to help provide direction on the unpacking and moving, basic assembly, and an overview of configure features on Eaton's RS Enclosure System.

Intended Audience

This document is intended for personnel experienced at installing rack and enclosure equipment in a data center facility.

Technical Support

If you encounter any problems with this installation, send an email and detailed description of the problem, as well as contact information, to Technical Support at www.Eaton.com/RS.

Document Conventions

This document uses the following conventions:

Document names and unfamiliar terms appear in italics, with a definition as needed.

Acronyms are defined the first time they appear, with the acronym in parentheses. For example: two rack units (2U).

Document History

The following table shows this document's revision history:

June, 2016	First Publication – Pub No. IL159003EN

Sales Representative and Contact Information

Contact your Eaton Sales representative using one of the methods below:

Phone Call us toll free at 800-225-7348 (US Only) or 508-852-4300

Mail Eaton
160 Gold Star Boulevard
Worcester, MA 01606

Email InfoESWorcesterMA@Eaton.com

Web Visit us at www.eaton.com/wrightline and click on "Contact Us." Simply complete and submit the form as directed on our website.

Before You Begin

Before installing Eaton's RS Enclosure, it is recommended that you do the following:

- Read and understand the instruction herein before attempting to unpack, install, operate or service the RS enclosure.
- Follow all information that is found on safety labels on the product and packaging.
- Familiarize yourself with the various enclosure components described within this manual.
- Familiarize yourself with the warning symbols that appear throughout this manual.
- The use of personal protective equipment such as safety glasses and work gloves is recommended during the unpacking and set-up of the enclosure.
- Read, understand and follow the guidelines and limitations herein for loading your enclosure.

NOTE

Notes point out something of special interest to the reader in direct context or relationship to the immediate topic or step being performed.

IMPORTANT

Important notes provide information of interest to the reader of a more global or general context.

CAUTION

Cautions draw special attention to anything that may cause damage to equipment.

WARNING

Warnings draw special attention to any situation that may cause severe injury, physical harm, or death, to the reader and/or person performing the task at hand.

Safety Warnings and Precautions

WARNING

Installation and assembly must be performed by qualified personnel.

Ensure that the floor / wall structure is able to withstand the weight of the enclosure while fully loaded.

Ensure the enclosure is plumb and level for proper operation.

Route all power cords and cabling away from any possible pinch points or moving parts.

Always fully mount and secure enclosure or rack system before loading equipment.

Evenly distribute all mounted loads and equipment to ensure stability within the enclosure system, placing heavier loads towards the bottom of the enclosure to avoid unstable conditions.

To reduce risk of personal injury and product damage, always ensure a sufficient amount of personnel are present when loading, unloading or moving the enclosure or rack system.

Suitable for mounting on concrete or other non-combustible surface only.

Assembly and installation of certain accessories takes place on top of an enclosure, at an approximate height of 8-11 feet. If step ladders are used during installation, installers MUST maintain three points of contact with the ladder at all times, DO NOT climb to a point higher than six feet from the ground, unless tethered to a safety harness, and NEVER stand on the top two steps of a step ladder, regardless of the ladder's overall height.

Failure to adhere to these warnings may result in serious injury or property damage.

Enclosure Capacity

Static load capacity: 3,000 lb. for enclosures that remain stationary (not relocated after loading).

Dynamic load capacity: 2,000 lb. for enclosures that are rolled on attached casters, or otherwise relocated, after the application of the load.

c UL us LISTED

UL 2416, Safety for Audio/Video, Information and Communication Technology Equipment Enclosure, Enclosure and Rack Systems

UL60950-1 & CAN/CSA C22.2 No. 60950-01-03, Safety of Information Technology Equipment, Including Electrical Business Equipment.

Investigation of the enclosure system or rack equipment or equipment enclosure, does not include investigation of any equipment or material contained there in.

WARNING

Do not apply loads that exceed the capacity of the enclosure. The stated capacities DO NOT include the weight of the enclosure itself.

The applied load includes any items installed into the enclosure after receipt of the enclosure from the carrier, including (but not limited to) electronic equipment, power distribution units, and cabling. The applied load also includes any item(s) mounted to the outside of the enclosure or rested on the top of the enclosure, where the enclosure bears the weight of the items.

It is recommended that you load your heaviest electronic equipment at the bottom of the enclosure. This will ensure that the load's center of gravity (tipping point) is as low as possible. Failure to follow this warning could result in the possibility of the enclosure tipping, causing serious injury or property damage.

SECTION II

Unpacking, off-loading from pallet, and moving enclosures

⚠ WARNING

Use two or more people to move the enclosure off the pallet. Empty enclosures can weigh as much as 500 pounds, depending on size and configuration. Failure to follow this warning could result in the possibility of the enclosure tipping, causing serious injury or property damage.

Tools required

- Utility knife
- Wrench size 7⁄16" (used to remove shipping anchors)
- Site approved moving devices for enclosures without casters

ⓘ NOTE

Enclosures with built-in casters may be rolled off of the pallet, while enclosures without casters need to be slid off.

Use two people to roll and guide a enclosure that is equipped with casters. Do **not** attempt to roll the enclosures sideways. For enclosures that do **not** have casters installed, use appropriate material handling and moving devices that are approved by the installation site.

Inspect the enclosure

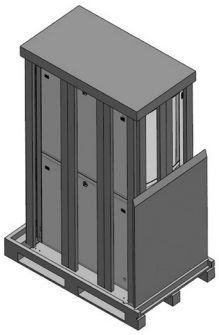

The packaged enclosure should be inspected for shipping damage prior to unpacking. If damage to the packaging or enclosure is visible, immediately contact your Eaton representative and request the carrier's agent to be present when the unit is unpackaged.

Optional Ramp shown (RSRMPSTD)

Unpack the enclosure

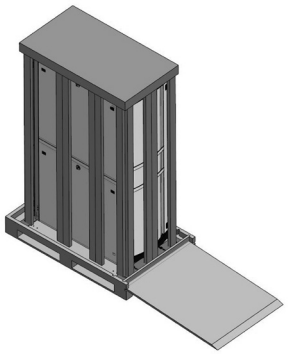

1. Cut the plastic wrap along the corrugated corner protectors to avoid damaging the enclosure.
2. Carefully remove and properly discard the packaging material. Remove all shipping brackets that anchor the enclosure to the pallet.

Remove the enclosure from the pallet

Ramps (RSRMPSTD ordered separately) are available to assist in removing the enclosure from the pallet.

1. Detach the ramp from its shipping position by lifting the ramp upward.
2. Place the ramp into the open end of the pallet, with the beveled edge resting on the floor.

Move the enclosure into position.

⚠ WARNING

The enclosure can easily be tipped. Use extreme caution when moving the enclosure.

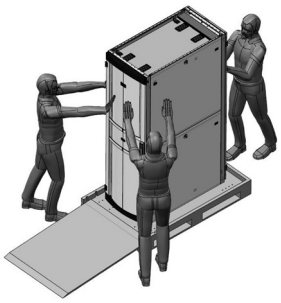

⚠ DO NOT PUSH ON THE CENTER OF DOORS OR SIDE PANELS.

DO NOT USE A "WALKING" METHOD (PUSHING SIDE TO SIDE) TO MOVE THE ENCLOSURE.

Enclosure main components

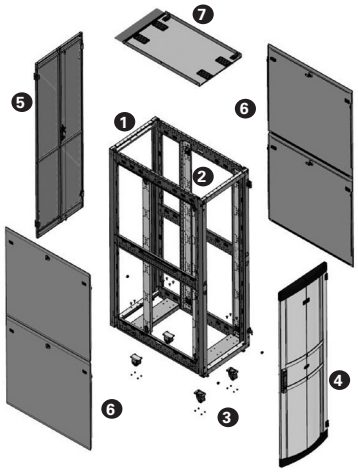

1. One frame
2. Two sets of tool-less rack-mount rails
3. Caster kit set/4
4. One full front door
5. One rear split door
6. Two locking split side panels
7. One top panel

RSV4262 example shown

Initial enclosure set-up

For convenience at initial set-up, it may be desirable to remove doors and side panels to help reduce the enclosure weight and improve access to the interior of the enclosure.

Unlocking and opening the doors

A typical enclosure will have a full width front door and a split rear door. The doors are available with three styles of locking handles.

A Key lock handle (standard)

To unlock a key lock handle, insert the key into the handle and turn the key 180 degrees, counter-clockwise. Flip the door handle up and then rotate the handle 90 degrees towards the center of the door to allow the door to open.

B Combination lock handle (optional)

To unlock a combination lock handle, set the (3) numbered thumb wheels to zero. Flip the door handle up and then rotate the handle 90 degrees towards the center of the door to allow the door to open.

C HFID lock handle (optional)

Refer to separate instructions provided with the enclosure for initial usage and set up.

NOTE

See page 11 for more lock information.



Figure A
Key lock handle

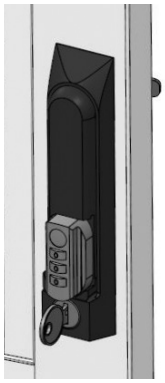

Figure B
Combination lock handle

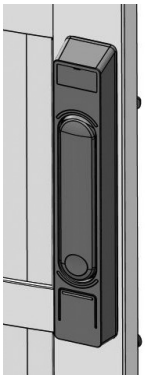

Figure C
HFID lock handle



Grounding and bonding instructions

Grounding hardware

Main ground hardware is NOT included. Use suitable hardware to help ensure protective earth connections in accordance with article 250 of the National Electrical Code. Main ground hardware must include # 10 AWG wire and hardware to connected to 6mm stud, star tooth washer and nut.

Bonding cable and hardware

Typical hardware included with enclosure for bonding of doors and panels.



Bonding Cable Quick Disconnect, 10 AWG, .265 Dia. Ring Terminal, 12" [300mm]



Lock Nut M6



Tooth Lock Washer M6



Bonding Clip for (14-12 gauge wire)

Tool required

- 10mm hex wrench or socket.

Main protective grounding

Each enclosure must be grounded directly to the building common grounding system. Grounding is made in accordance with the CAN/CSA-C22.2 No. 60950-1-03 First Edition, and UL 2416 standards for bonding and grounding guidelines.

The bonding connector shall be attached to any one of the (4) Protective Earth Terminals (PET) connection points in the enclosure. The bonding connector must be attached to the enclosure's ground point as shown in figure 1.

NOTE

Protective Earth Terminals (PET) are labelled with proper symbol shown in figure 2 , and are the only terminals to which the protective earth ground connections shall be attached.



Figure 2

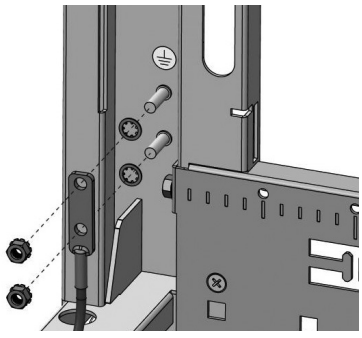

Figure 1 Main Earth Ground (PET)

Bonding of doors and panels

Each enclosure comes with bonding hardware already installed. Typical installation as shown in figure 3.

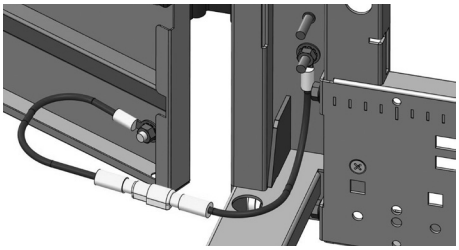

Figure 3 Bonding Cable (quick dis-connect)

NOTE

It may be necessary to remove bonding connection for doors in order to connect main ground connections to enclosure.

When grounding the enclosure to the building common grounding, it is essential that the main protective ground is connected and secured first with its own nut before any bonding connections are made on top as shown in figure 4.

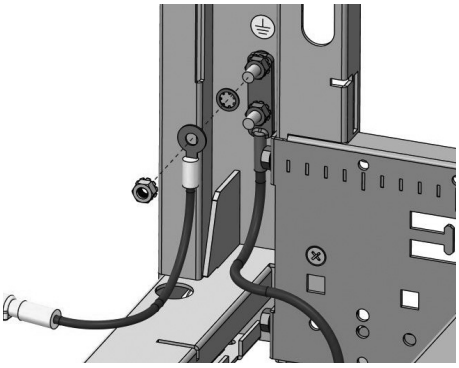

Figure 4 Bonding Cable over PET

Auto bonding features

Side panels, rack rails and horizontal panels all have integrated features that automatically create a bond connection to the grounded enclosure frame when properly attached to the enclosure.

WARNING

Do not remove or tamper with the auto-ground features.

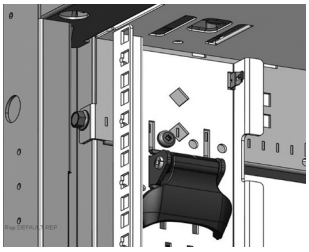

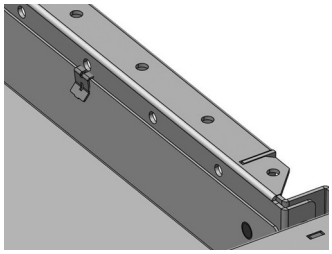

Removing a door from the enclosure

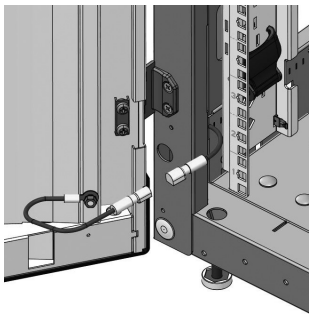

1. Open the door.
2. De-couple the ground lanyard center connector.
3. With the door open about 45 degrees, carefully lift the door off of the hinges.



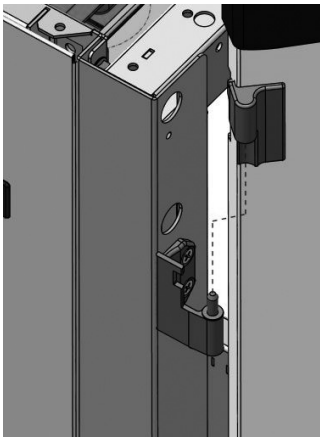

Reverse the procedure to reinstall the door.

To reverse the swing direction of your full width front door, see page 10.

Removing side panels

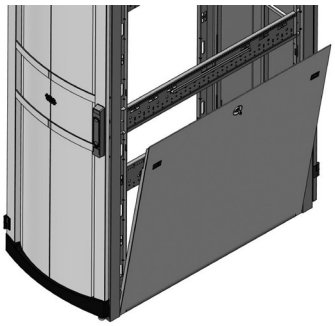

To remove a side panel:

1. Insert key into lock and turn key 90 degrees clockwise to unlock.
2. Slide two side panel latches inward to release panel.
3. Carefully tilt top of side panel outward and then lift to remove.

Reverse the procedure to re-install the panel.

NOTE

The top and bottom side panels are identical and may be interchanged.

Leveling the enclosure

Tools Required

- Level
- 7mm hex nut driver
- Phillips head screw driver

Ensure that the enclosure is in the proper final position.

Four leveling feet are provided, one at each corner of the enclosure. The levelers may be adjusted from the top, using a 7mm nut driver. Access to the top of the levelers is through the holes in the bottom frame members. Adjust the levelers as required to level the enclosure both front-to-back and side-to-side. Remove any shipping tape if required, prior to adjustment.

NOTE

Isolation pads are included on the leveler feet to provide protection for the data center floor. The pads are removable as needed.

If the enclosure is to be bayed to an adjacent enclosure, ensure that the tops of the enclosures are aligned in height.

See page 8 for baying enclosures.

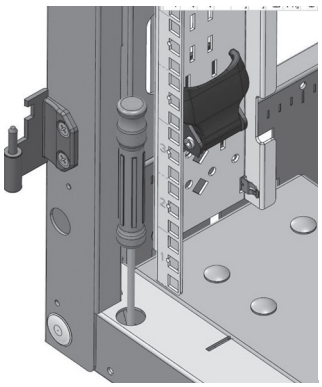

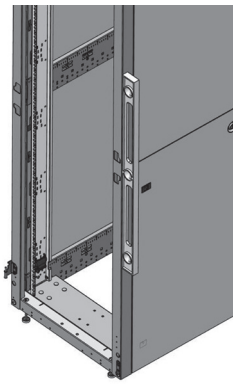

Anchoring and stabilizing a enclosure

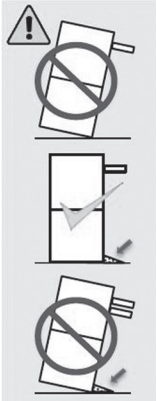

Tools Required

- Phillips head screw driver or electric drill with Phillips head bit

WARNING

Never extend more than one shelf or piece of rollout equipment, even with stabilizer bracket assembled to the enclosure.

Failure to follow this warning could result in the possibility of the enclosure tipping, causing serious injury or property damage.

Anchor brackets

Anchor brackets (RSANX) may be attached to the enclosure in three ways:

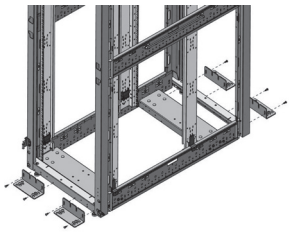

1. Attach to enclosure lower frame, with floor flange oriented outward

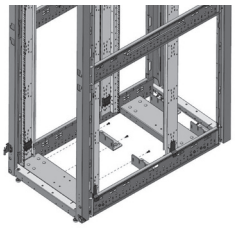

2. Attach to enclosure lower frame, with floor flange oriented inward

Stabilizer brackets

Stabilizer brackets are attached to the outside of the enclosure lower cross member. The extended depth of the stabilizer brackets add stability to the enclosure.

NOTE

The enclosure will NOT meet anchorage requirements unless it is also attached to the floor with appropriate anchor brackets (see above).

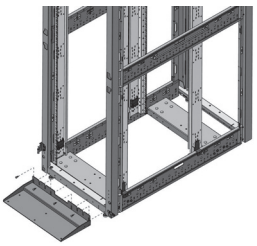

3. Attach to the caster channel inside enclosure

Anchor brackets must be attached to the site floor with appropriate hardware in order to meet the appropriate seismic design categories as described in the IBC (International Building Code).

Please refer to Eaton Support for more information.

SECTION III

Configurable enclosure features

The following covers the methods required to move, adjust and operate user configurable features in the enclosure, including equipment rails, PDU brackets, horizontal panels and full width door swing reversal. For additional accessories, see www.Eaton.com/RS.

Equipment rails

The position of the front equipment rail's mounting flange is factory pre-set at 50mm (~2") from the face of the enclosure frame. The front-to-back rail-to-rail spacing is pre-set to 700mm (~27.5").

Rail position adjustment

To reposition an equipment rail:

1. Flip open the (2) blue cam levers.
2. Slide the equipment rail forward or back to the desired position.
3. Align face of rail with desired hash marks on enclosure side members, (the spacing of hash marks is 10mm, or approximately 3/8").
4. Ensure rail is aligned vertically, then flip cam levers to locked position.

NOTE

Pre-configured networking enclosure rails are recessed 150mm (5.9") due to the space required for the vertical cable manager fingers.

The face of the rail must be aligned with a hash mark to ensure that the clamping mechanism's ball detent will align into a locking hole.

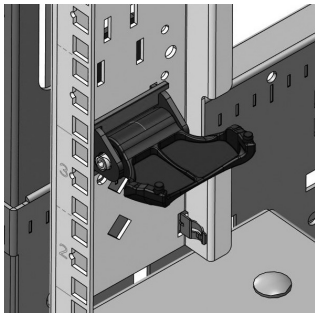

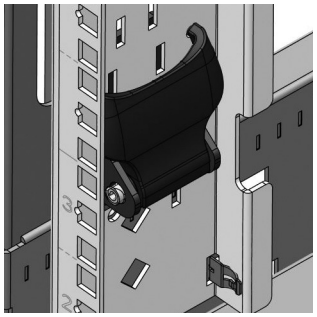

Removing an equipment rail

1. Flip open the (2) blue cam levers.
2. Tilt the top of the rail forward or back to unseat the rail's hanger brackets.
3. Lift and remove the rail from the enclosure side members.

Baying adjacent enclosures

Tool Required

- Phillips head screw driver

Four baying brackets are provided with each enclosure. Using the supplied hardware, attach two brackets to the front, and two to the rear of the adjacent enclosures to join them together.

Using the 24" baying position will result in a 3/8" (9.5mm) gap between the enclosures. Use plastic filler strip included in RSBAYKIT to fill gap. Trim as needed.

Anchoring brackets and stabilizing plates are available to increase the stability of the enclosure. See page 7 for more information.

There are two alternate attachment positions on the baying brackets. The alternate positions may be used when baying 600mm wide enclosures together. One bracket position spaces the enclosures on a 24" (609.5mm) module, allowing alignment with 24" floor tiles. The second position will join the enclosures directly on a 600mm (23 5/8") module (see figure 5).

NOTE

If side panels are desired on the enclosures, they must be installed onto the enclosures prior to positioning the enclosures next to one another.

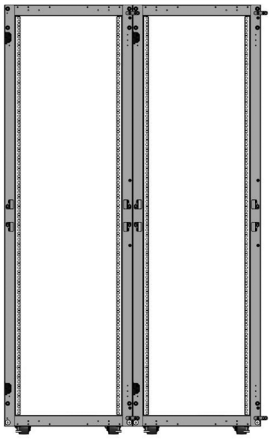

Figure 5 Baying adjacent enclosures

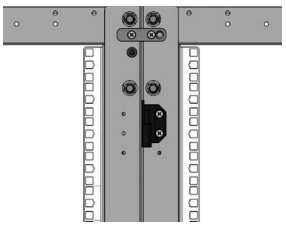

600mm Module

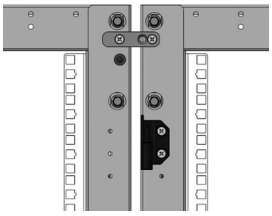

24" Module

Installing cage nuts

Cage nuts must be installed horizontally into the equipment rail square holes with the retention ears engaging the vertical sides of the square holes.

The cage nuts must be installed into the rear face of the equipment rail, opposite the equipment mounting face.

1. Angle the cage nut into the square hole, engaging one of its retention ears.
2. Use a cage nut installation tool to grab the remaining retention ear, pulling the cage nut fully into the square hole (see figure 6).



Figure 6

NOTE

A clip nut that is installed vertically will not engage properly and is in danger of falling out of the square hole.

For tool-less cage nuts, Eaton offers kits of rack studs for ease of equipment installation.

PDU cable management brackets



PDU Standard
RSPDUMTG

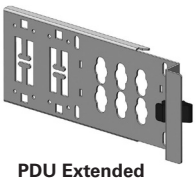

PDU Extended
RSPDULMTGX

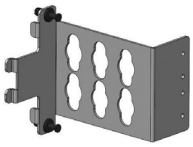

PDU 90°
RSPDU9MTGX

The PDU brackets are multi-purpose brackets that can be used to:

1. Mount power distribution units.
2. Act as lacing brackets to retain cable bundles when used with Velcro™ Straps (see page 12).
3. Mount Eaton's B-Line series Flextray™ vertical cable managers. Visit www.Eaton.com/RS, for more information.

PDU brackets can be installed at several predetermined locations on enclosure corner posts. Predefined positions are vertically spaced at 7U (12.25"). This spacing enables brackets to be aligned to typical spacing found on most tool-less mounted power distribution units. The factory pre-set spacing is 35U (61.25").

How to remove and install a PDU bracket

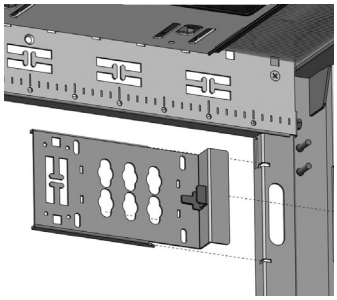

To remove a PDU bracket:

1. Depress the blue retention tab.
2. Pull bracket away from enclosure corner post.

To install a PDU bracket:

1. Engage bracket ears into slots of enclosure corner post.
2. Push on bracket to engage blue retention tab.
3. Ensure blue retention tab is flush and fully engaged to secure bracket.

Attaching a PDU

Ensure that the vertical PDU bracket spacing matches the requirements of your tool-less mounted PDU.

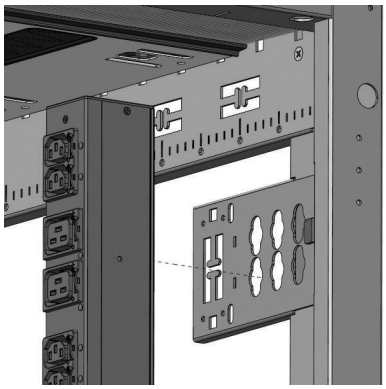

1. Engage the PDU mounting buttons into the teardrop holes in the bracket
2. Lower the buttons into the narrow end of the teardrop holes.

PDU retainer

A tool-less retainer (RSPDURTNKITB) is available to lock Eaton's ePDUs into the installed position.

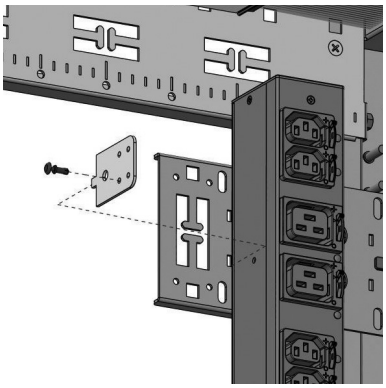

1. Engage the small tab on the retainer into the slot in the PDU bracket, adjacent to the ePDU bracket.
2. Press the retractable plastic buttons into the two holes in the ePDU.

SECTION III

Horizontal panel modularity

Our preconfigured enclosures all come equipped with single piece, full depth panels installed in the top of the enclosure. The family of horizontal panels may be used interchangeably as enclosure top or bottom panels.

The front-to-back depths of the enclosure top and bottom openings are evenly divisible by 100mm. Modular horizontal panels are available in depths that are multiples of 100mm. This allows many panel styles and sizes to be mixed and matched to the function and requirements of the enclosure. These modular panel options are available in Configure-To-Order Enclosures or as accessory items.

Horizontal panel "flip-over" feature

When used as top panels, the horizontal panels may be installed with the "smooth side" up or down. Installing the panel with the "smooth side" down is useful to help minimize cold air bypass over the top of the electronic equipment zone. This "smooth side down" mode of installation is also useful to create a front-to-back cable chase over the top exterior of the enclosure (see page 12, Cable management).

How to remove and install a horizontal panel

Horizontal panels are retained by two fixed pins on one side and two blue pin latches on the other side.

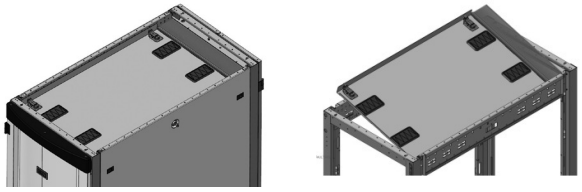

To remove a top panel:

1. Pull blue latches toward center of panel.
2. Angle panel upwards to disengage fixed pins.

Reverse the procedure to install the top panel.

How to remove and install a horizontal panel – 800mm wide enclosures

Horizontal panels for 800mm wide enclosure consist of additional side panels that fill the roughly 100mm gap on either side of the enclosure.

To remove these panels:

1. Remove plastic retaining pins along inside of inner front-to-back channel.
2. Angle panel upwards to disengage fixed pins.

NOTE

Remove inner panel(s) as noted previously.
Reverse procedure to reinstall panels or flip inner panel(s).

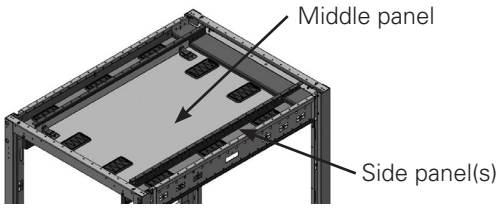

Reversing swing direction of a full width door

Hinge kits are available to change the swing of a door. Kit includes hinges, mounting hardware and Eaton badge.

Available hinge kits:

- Left Hand Swing Kit #RSHINGEKITL
- Right Hand Swing Kit # RSHINGEKITR

Contact your Eaton sales representative for more information on accessories and options.

Tools required

- Phillips head screw driver
- 10mm hex wrench (required for combination and HFID style swing handles only)

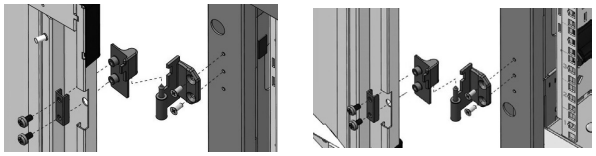

NOTE

For doors having HFID locks, you must also detach HFID connector wire from control box.

1. Open door and then disconnect ground lanyard's center connector.
2. With door open to 45 degrees, carefully lift door off hinges.
3. Disconnect enclosure portion of ground lanyard from enclosure and re-attach to opposite side of enclosure.
4. Remove snap-on Eaton logo plate and relocate to opposite end of door. Refer to "Door Reversal Hinge Kit" installation manual sheet for proper location.
5. Remove and discard existing hinge components from enclosure frame and door.
6. install new hinge components from the reversal kit onto enclosure and door.
7. Reverse swing handle orientation (see page 11 for detailed handle reversal instructions).
8. Carefully lift and hang door onto new hinges.
9. Reconnect ground lanyard's center connector.
10. For HFID doors, reroute HFID connector wire to control box.

Remove existing logo badge

Pinch center barbs to remove. A replacement badge is provided in the event existing gets damaged during removal.

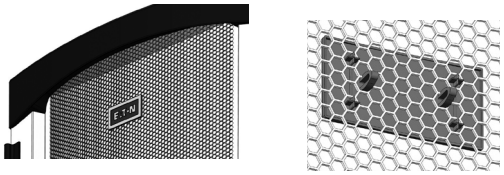

1. Locate badge on opposite end of newly oriented door.
2. Center on door and align with top of hinge.
3. Push plastic barbs through hex perf until fully engaged.

Handle reversal instructions



Figure A

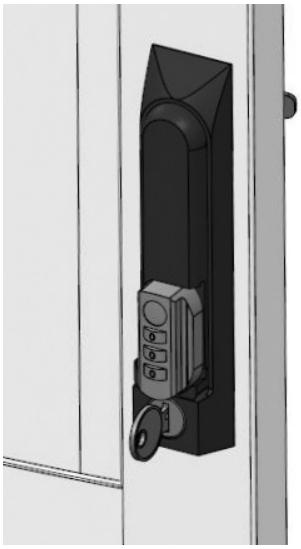

Figure B

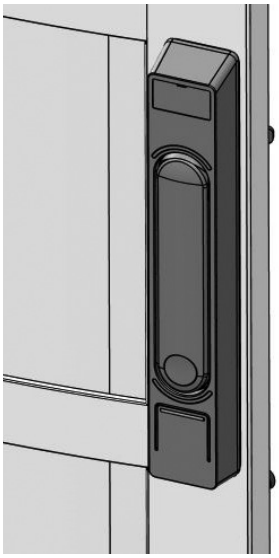

Figure C

A Key lock handle (standard)

1. Ensure swing handle is LOCKED.
2. Unscrew and remove lock pawl and rotation control washer from swing handle.
3. Compress two retention tabs on back of swing handle; then rotate handle out of door.
4. Rotate handle 180 degrees and then reinstall it into door.
5. Reattach lock pawl and rotation control washer onto swing handle.
6. Unlock and rotate swing handle to ensure that assembly rotates properly.

B Combination lock handle (optional)

1. Ensure combination swing handle is LOCKED.
2. Unscrew and remove lock pawl from swing handle.
3. Remove swing handle from door by unscrewing two retention plates.
4. Rotate swing handle 180 degrees; reinstall it into door with two retention plates.
5. Reattach lock pawl onto swing handle.
6. Unlock and rotate swing handle to ensure assembly rotates properly.

C HFID lock handle (optional)

1. Ensure HFID swing handle is LOCKED.
2. Unthread HFID connector wire, taking note of appropriate wire path through door structure. The wire will be threaded through door's opposite end following the same path.
3. Unscrew and remove lock pawl from swing handle.
4. Remove swing handle from door by unscrewing retention plate and HFID connector wire cover.
5. Rotate swing handle 180 degrees; reinstall it into door with retention plate and HFID connector wire cover.

i NOTE

Take care to ensure that HFID connector wire is properly seated under connector wire cover.

1. Reattach lock pawl onto swing handle.
2. Unlock and rotate swing handle to ensure assembly rotates properly.
3. Reroute the HFID connector wire through the door's structure.

SECTION III

Cable management

The RS Enclosure has many protected openings to allow convenient ingress and egress of cabling. There are also many standard features inside of the enclosure that enable retention and routing of bundled cables both vertically and horizontally within the enclosure.

Bottom ingress/egress

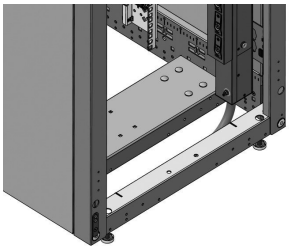

The standard position of the rear caster channel provides a 100mm (~4") opening between the channel and the enclosures rear bottom member. This allows for direct passage of cables without the need to bend cables around the enclosure structure.

Top ingress/egress

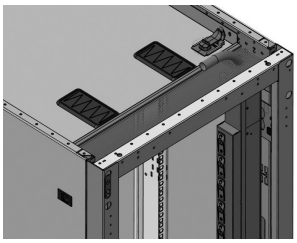

Standard configurations come with single panels that have 100mm (~4") cable opening with integrated brush strip. This opening is located to the rear of the enclosure and allows direct access to internal vertical cable managers without the need to bend cables around the enclosure structure.

Cable opening brushes

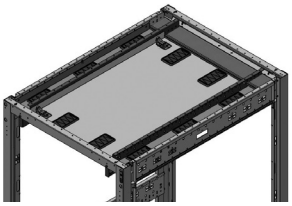

The 800mm wide enclosures also have removable top covers along each side of the enclosure. These covers have integrated cable grommets and brushed openings for cable passage. The covers can also be completely removed to allow total access to the "zero U" space on each side of the EIA equipment zone. To remove the cover, pull outward on the tool-less plastic retention pins.

The 100mm brush strips are available to help minimize air loss through top panel cable openings. Use one brush for 100mm openings. The brush strips simply clip onto the lateral edges of the modular top panels.

Cable grommets

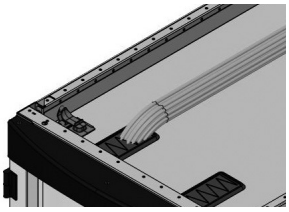

Some top and side panels are equipped with soft durometer perforated cable grommets. The grommets may be torn on the perforations, as required, to help minimize air bypass.

RS Velcro™ strap installation

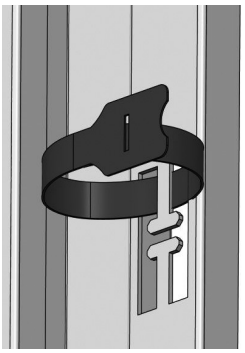

RS Enclosures have numerous cutouts throughout that support attachment of Velcro straps, offering convenient built in cable management.

Velcro kits are available in two styles, standard and buckle straps, and range in length from 8"-12" Standard kit contains 50 straps and buckle kit contains 10 straps.

Disclaimer of warranties and limitation of liability

The information, recommendations, descriptions and safety notations in this document are based on Eaton Corporation's ("Eaton") experience and judgment and may not cover all contingencies. If further information is required, an Eaton sales office should be consulted. Sale of the product shown in this literature is subject to the terms and conditions outlined in appropriate Eaton selling policies or other contractual agreement between Eaton and the purchaser.

THERE ARE NO UNDERSTANDINGS, AGREEMENTS, WARRANTIES, EXPRESSED OR IMPLIED, INCLUDING WARRANTIES OF FITNESS FOR A PARTICULAR PURPOSE OR MERCHANTABILITY, OTHER THAN THOSE SPECIFICALLY SET OUT IN ANY EXISTING CONTRACT BETWEEN THE PARTIES. ANY SUCH CONTRACT STATES THE ENTIRE OBLIGATION OF EATON. THE CONTENTS OF THIS DOCUMENT SHALL NOT BECOME PART OF OR MODIFY ANY CONTRACT BETWEEN THE PARTIES.

In no event will Eaton be responsible to the purchaser or user in contract, in tort (including negligence), strict liability or otherwise for any special, indirect, incidental or consequential damage or loss whatsoever, including but not limited to damage or loss of use of equipment, plant or power system, cost of capital, loss of power, additional expenses in the use of existing power facilities, or claims against the purchaser or user by its customers resulting from the use of the information, recommendations and descriptions contained herein. The information contained in this manual is subject to change without notice.

Eaton
1000 Eaton Boulevard
Cleveland, OH 44122
United States
Eaton.com

© 2016 Eaton
All Rights Reserved
Printed in USA
Publication No. IL159003EN
June 2016

Powering Business Worldwide

Eaton is a registered trademark.

All trademarks are property of their respective owners.

Follow us on social media to get the latest product and support information.