# Operating and installation instructions

Combined fridge-freezer with BioFresh compartment

EN

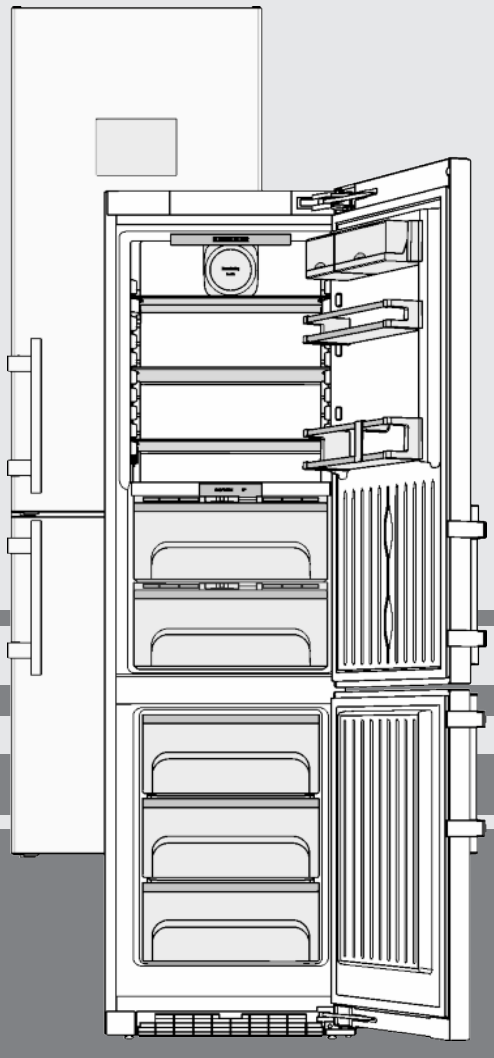

040416 **7086140 - 00**

**CBN(i/ies)/ CBNP(es/bs/i/ies) ... P**

LIEBHERR

# Contents


| | | |
|---|---|---|
| **1** | **Appliance at a glance** | **2** |
| 1.1 | Description of appliance and equipment | 2 |
| 1.2 | Appliance range of use | 3 |
| 1.3 | Conformity | 3 |
| 1.4 | External dimensions of the appliance | 3 |
| 1.5 | Saving energy | 3 |
| 1.6 | Example of contents arrangement | 4 |
| 1.7 | Smart device | 4 |
| **2** | **General safety information** | **4** |
| **3** | **Controls and displays** | **5** |
| 3.1 | Status screen | 5 |
| 3.2 | Home screen | 5 |
| 3.3 | Navigation | 6 |
| 3.4 | Display symbols | 6 |
| 3.5 | Appliance options | 7 |
| **4** | **Putting into operation** | **7** |
| 4.1 | Transporting the appliance | 7 |
| 4.2 | Installing the appliance | 7 |
| 4.3 | Reversing the door | 8 |
| 4.4 | Insertion into a row of kitchen units | 16 |
| 4.5 | Disposing of packaging | 17 |
| 4.6 | Connecting the appliance | 17 |
| 4.7 | Switching on the appliance | 17 |
| 4.8 | Inserting the FreshAir filter. | 18 |
| 4.9 | Activating the clean ventilation grill reminder function | 18 |
| **5** | **Control** | **18** |
| 5.1 | System settings | 18 |
| 5.2 | Timer | 19 |
| 5.3 | Programme | 19 |
| 5.4 | Options | 20 |
| 5.5 | Refrigerator compartment | 23 |
| 5.6 | BioFresh compartment | 24 |
| 5.7 | Freezer compartment | 26 |
| **6** | **Maintenance** | **27** |
| 6.1 | Change the FreshAir filter | 27 |
| 6.2 | Defrosting with NoFrost | 27 |
| 6.3 | Cleaning the ventilation grid | 27 |
| 6.4 | Cleaning the appliance | 28 |
| 6.5 | Customer service | 28 |
| **7** | **Malfunctions** | **28** |
| **8** | **Messages** | **29** |
| **9** | **Decommissioning** | **30** |
| 9.1 | Switching the appliance off | 30 |
| 9.2 | Taking the appliance out of service | 30 |
| **10** | **Disposing of the appliance** | **31** |


The manufacturer works constantly on the further development of all the types and models. Therefore please understand that we have to reserve the right to make design, equipment and technical modifications.

To get to know all the benefits of your new appliance, please read the information contained in these instructions carefully.

The instructions apply to several models. Differences may occur. Text relating only to specific appliances is marked with an asterisk (*).

**Instructions for action are marked with a ▶, the results of action are marked with a ▷.**

# 1 Appliance at a glance

## 1.1 Description of appliance and equipment

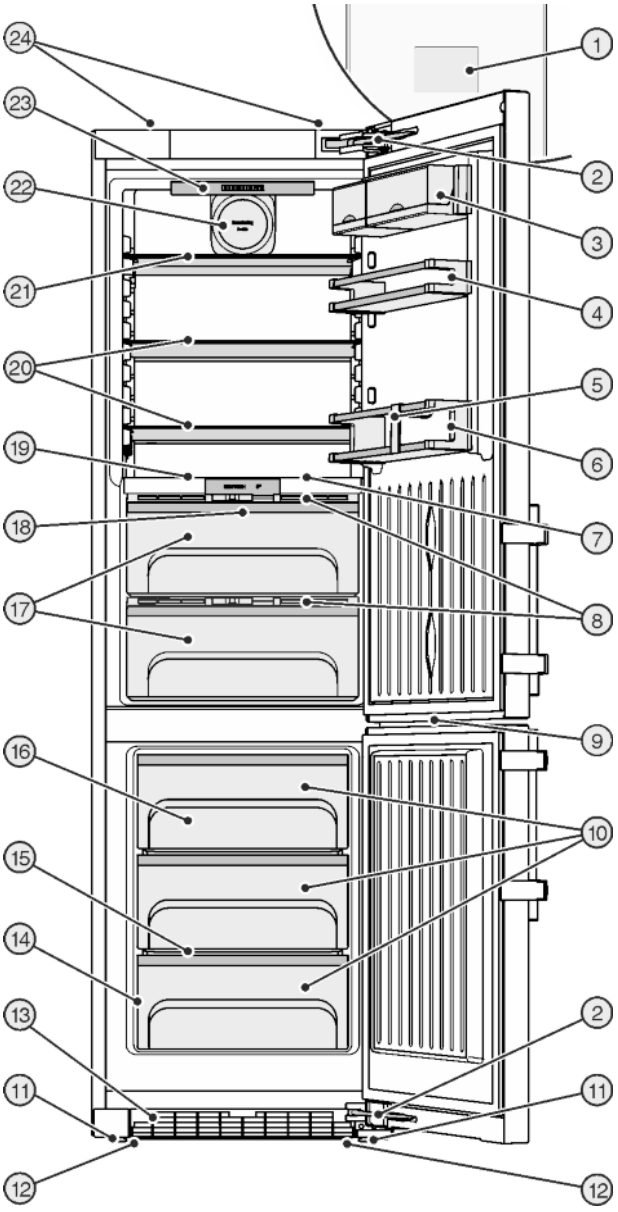


*Fig. 1*

**(1)** Operating and control elements
**(2)** Soft stop mechanism
**(3)** Package rack
**(4)** Can rack
**(5)** Bottle holder
**(6)** Bottle rack
**(7)** LED interior light
**(8)** Humidity control plate
**(9)** LED lighting, freezer compartment
**(10)** Freezer drawer
**(11)** Adjusting feet
**(12)** Front transport handles, rear transport castors
**(13)** Ventilation grid
**(14)** Type plate
**(15)** VarioSpace
**(16)** Cold storage accumulators
**(17)** BioFresh compartment, adjustable
**(18)** LED lighting, BioFresh compartment
**(19)** Adjustable bottle shelf
**(20)** Shelf
**(21)** Shelf, sectioned
**(22)** Fan, with holder for fresh air filter
**(23)** LED interior light, swivelling
**(24)** Rear transport handles



*** Depending on model and options**

**Note**

▶ Shelves, drawers and baskets are arranged for optimum energy efficiency on delivery.

## 1.2 Appliance range of use

### Intended use

The appliance is only suitable for refrigerating food in a domestic or domestic-like environment. This includes, for example, using

- in staff kitchens, bed and breakfast establishments,
- by guests in country houses, hotels, motels and other accommodation,
- for catering and similar services in the wholesale trade.

All other types of use are not permitted.

### Foreseeable misuse

The following applications are expressly forbidden:

- Storing and refrigerating medicines, blood plasma, laboratory preparations or similar substances and products based on the Medical Device Directive 2007/47/EC
- Use in areas at risk of explosions
- Use on moving substrates, such as ships, rail travel or aeroplanes
- Storing live animals

Misusing the appliance may lead to damage to the goods stored or they may spoil.

### Climate classifications

Depending on the climate classification the appliance is designed to operate in restricted ambient temperatures. The climate classification applying to your appliance is printed on the rating plate.

**Note**

▶ Keep to the specified ambient temperatures in order to guarantee that the appliance works properly.

| Climate classification | for ambient temperatures of |
|---|---|
| SN | 10 °C to 32 °C |
| N | 16 °C to 32 °C |
| ST | 16 °C to 38 °C |
| T | 16 °C to 43 °C |

## 1.3 Conformity

The refrigerant circuit is tested for leakage. The appliance complies with the relevant safety regulations and EC Directives 2006/95/EC, 2004/108/EC, 2009/125/EC and 2010/30/EU.

The BioFresh compartment satisfies the requirements of a chill compartment to EN ISO 15502.

## 1.4 External dimensions of the appliance

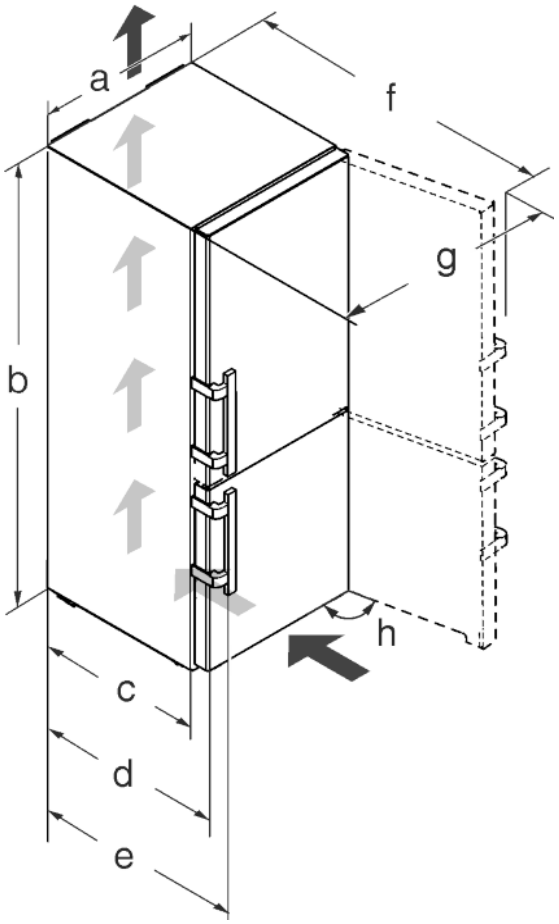


*Fig. 2*

| Model | Appliance height H (mm) |
|---|---|
| CBNP(es/bs/i/ies) 48.. | 2010 |

[x] If wall spacers are used, the dimensions increase by 15 mm (see 4.2) .

With the door open, the dimensions apply to an opening angle of 115 °. Distances vary according to the opening angle.

## 1.5 Saving energy

- Pay attention to good ventilation. Do not cover ventilation holes or grids.
- Always keep the fan air slits clear.
- Do not install the appliance in direct sunlight, next to an oven, radiator or similar.
- Energy consumption is dependent on the installation conditions, e.g. ambient temperature (see 1.2) . If the ambient temperature deviates from the standard temperature of 25°C, the energy consumption may differ.
- Open the appliance for as short a time as possible.
- The lower the temperature is set the higher the energy consumption.
- Sort food before arranging (see Appliance at a glance).
- Store all food well packaged and covered. A build up of frost is avoided.
- Only take food out for as long as necessary so that it doesn't warm up too much.
- Inserting warm food: allow to cool down to room temperature first.
- Thaw frozen food in the refrigerator.
- Use the holiday function if you intend to be away for an extended period .

- Leave the default setting of the screen switch-off function. This switches the screen off after 24 hours, (see 5.1.5) .

## 1.6 Example of contents arrangement

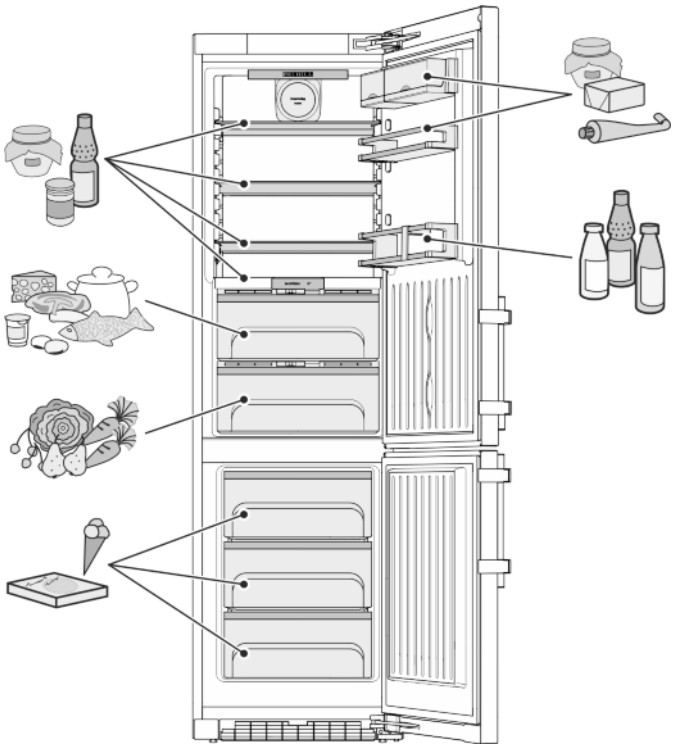

*Fig. 3*

## 1.7 Smart device

The appliance is ready for integration into a smart home and for extended services. Other options can be selected with a SmartDeviceBox. This is activated via the MyLiebherr customer portal.



You will find more information about availability and pre-requisites and the individual options on the website www.smartdevice.liebherr.com.

# 2 General safety information

**Danger for the user:**

- This appliance can be used by children of 8 years old and over, and also by persons with restricted physical, sensory or mental capacity or lack of experience and knowledge, if they are supervised or have been instructed on safe use of the appliance and understand the resulting risks. Children must not be allowed to play with the appliance. Cleaning and user maintenance must not be carried out by children without supervision.
- When disconnecting the appliance from the supply, always take hold of the plug. Do not pull the cable.
- In the event of a fault pull out the mains plug or deactivate the fuse.
- Do not damage the mains power cable. Do not operate the appliance with a defective mains power cable.
- Only customer service or other specially trained staff may repair or perform other operations on the appliance.
- Only assemble, connect and dispose of the appliance according to the instructions.
- Please keep these instructions in a safe place and pass them on to any subsequent owners.
- Special lights, such as LED lights on the appliance, are used to illuminate the interior of the appliance and are not suitable for room lighting.

**Fire hazard:**

- The refrigerant R 600a is environmentally friendly but flammable. Escaping refrigerant may ignite.
  - Do not damage the refrigerant circuit pipes.
  - Do not allow naked flames or ignition sources to enter the appliance.
  - Do not use any electrical appliances in the interior (e.g. steam cleaners, heaters, ice cream maker etc.).
  - If refrigerant escapes: remove any naked flames or sources of ignition from the leakage area. Ventilate the room well. Notify the after-sales service.
- Do not store explosives or sprays using combustible propellants such as butane, propane, pentane, etc. in the appliance. To identify these spray cans, look for the list of contents printed on the can, or a flame symbol. Gases possibly escaping may ignite due to electrical components.
- Keep burning candles, lamps and other items with naked flames away from the appliance so that they do not set the appliance on fire.
- Please be sure to store alcoholic drinks or other packaging containing alcohol in tightly closed containers. Any alcohol that leaks out may be ignited by electrical components.

**Danger of tipping and falling:**

- Do not misuse the plinth, drawers, doors etc. as a step or for support. This applies particularly to children.

**Danger of food poisoning:**

- Do not consume food which has been stored too long.

**Danger of frostbite, numbness and pain:**

- Avoid lasting skin contact with cold surfaces or refrigerated/frozen food or take protective

steps, e.g. wear gloves. Do not consume ice cream, water ice or ice cubes immediately and do not consume them too cold.

**Danger of injury and damage:**

- Hot steam can lead to injury. Do not use electrical heating or steam cleaning equipment, open flames or defrosting sprays to defrost.
- Do not use sharp implements to remove the ice.

**Danger of crushing:**

- Do not hold the hinge when opening and closing the door. Fingers may get caught.

**Symbols on the appliance:**

| | |
|---|---|
|  | The symbol can be located on the compressor. It refers to the oil in the compressor and indicates the following danger: Swallowing or inhaling can be fatal. This is only relevant for recycling. There is no danger in normal operation. |

**Please observe the specific information in the other sections:**

| | | |
|---|---|---|
|  | DANGER | identifies a situation involving direct danger which, if not obviated, may result in death or severe bodily injury. |
|  | WARNING | identifies a dangerous situation which, if not obviated, may result in death or severe bodily injury. |
|  | CAUTION | identifies a dangerous situation which, if not obviated, may result in minor or medium bodily injury. |
| | NOTICE | identifies a dangerous situation which, if not obviated, may result in damage to property. |

| | | |
|---|---|---|
| | Note | identifies useful information and tips. |

# 3 Controls and displays

## 3.1 Status screen

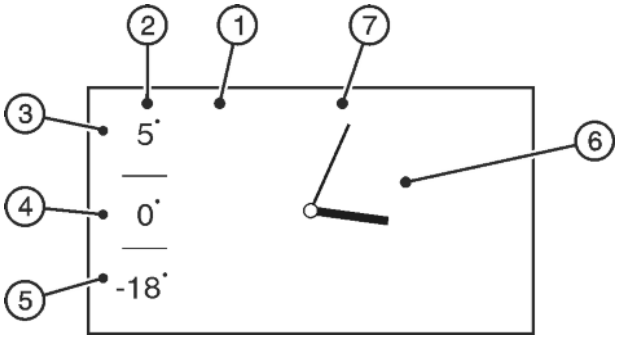


*Fig. 4*

**(1)** Screen
**(2)** Temperature display
**(3)** Fridge compartment temperature display
**(4)** BioFresh compartment temperature display
**(5)** Freezer compartment temperature display
**(6)** Time
**(7)** Date display, if selected

The status screen is displayed in normal operation if no settings are made. The set temperatures, time and date, if selected, are displayed.

Pressing on the temperature display takes you to the Home screen and setting options.

Pressing on the time activates a timer.

## 3.2 Home screen

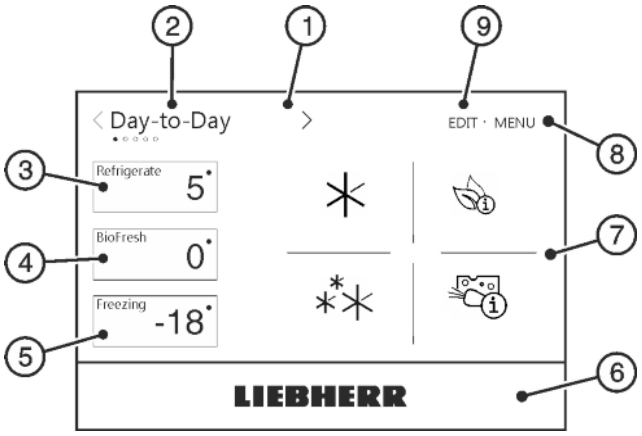


*Fig. 5*

**(1)** Screen
**(2)** Programme selection
**(3)** Fridge compartment field
**(4)** BioFresh field
**(5)** Freezer compartment field
**(6)** Liebherr button
**(7)** Programme field
**(8)** Menu
**(9)** Edit

The Home screen provides access to setting options and programme selection.

All functions can be called up by touching the screen and values can be changed.

**Programme selection**

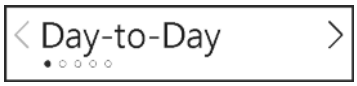


*Fig. 6 Programme name*

The currently set programme is displayed in the programme selection.

5 different programmes can be selected. Each programme offers individual temperature and function settings for different requirements.

**Fridge compartment field**




*Fig. 7 Fridge compartment temperature display*

The fridge compartment temperature is displayed in the fridge compartment field.

The new target value is immediately displayed when the temperature is changed. Arrows show the temperature change.

The following settings can be entered:

- Temperature settings
- Switching the fridge compartment on and off

When the fridge compartment is switched off, the BioFresh compartment is also switched off.

**BioFresh field**




*Fig. 8 BioFresh temperature display*

The BioFresh temperature is displayed in the BioFresh-Field.

**Freezer compartment field**




*Fig. 9 Freezer compartment temperature display*

The freezer compartment temperature is displayed in the freezer compartment field.

The new target value is immediately displayed when the temperature is changed. Arrows show the temperature change.

The following settings can be entered:

- Temperature settings
- Turning the freezer compartment on and off

The fridge and BioFresh compartment are also turned off when the freezer compartment is turned off.

**Temperature field**

The temperature field includes the fridge, BioFresh and freezer compartments.

**Liebherr button**

The entire surface under the screen is a button. Pressing on the button takes you to the status screen.

**Programme field**

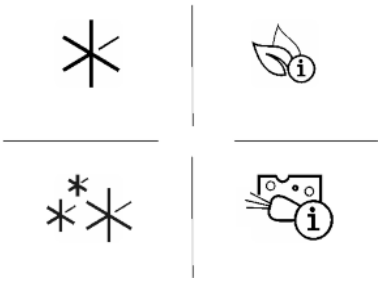

*Fig. 10 Programme-specific options*

Programme-specific options are displayed in the programme field. These offer setting options for the fridge and freezer area.

A maximum of 6 options can be displayed in the programme field.

**Menu**

Basic settings and programme-independent settings can be made via the menu.

**Edit**

Programme-specific options for display on the Home screen can be selected or deselected using the Edit command.

## 3.3 Navigation

The appliance is predominantly operated using the following symbols:



**Standby:**

Switch appliance or temperature zone on and off.

MENU

**Menu:**

Access to individual options and settings.

EDIT

**Edit:**

Selecting and deselecting programme-specific options.

LIEBHERR

**Liebherr button:**

Cancel selection, status screen appears.



**Up/down navigation arrow:**

Date and time setting.

The first option is displayed again after the last setting option.



**Left/right navigation arrow:**

Select choice and navigate.

If other settings can be selected, these can be selected via the navigation arrows. After the last all first setting option has been displayed, the navigation arrows are greyed out.



**Back:**

Cancel selection or leave setting.

The display switches to the next higher level or to the home screen



**Home:**

Cancel selection or leave setting.

The display switches to the home screen.




**Status button On/Off**

ON: Option activated, function active.

OFF: Option deactivated, function deactivated.



**Selection indicator**

: Setting/selection active.

: Setting/selection deactivated.



**Messages:**

There are active error messages and reminders.

Message data can be displayed again.

After confirming a function or option, an audible signal is emitted if alert and reminder sounds are activated.

**Note**

If no selection is made after 1 minute the display switches to the home screen.

## 3.4 Display symbols

Display symbols provide information on the current appliance status:



**Up arrows:**

The temperature increases.

During temperature changes and after completing options, upward arrows display the temperature increase until the target temperature is reached.



**Down arrows:**

The temperature reduces.

During temperature changes and after switching on options, downward arrows display the temperature decrease until the target temperature is reached.



**Standby:**

The appliance or temperature zone is switched off.

*active*

**Activated option:**

Displayed options are labelled *active* on the Home screen if these are switched on.

1 *of* ... / ● ○ ○ ○

**Navigation bar:**

The navigation bar shows the current position within a selection.

## 3.5 Appliance options

You can select or set the following options; explanations and setting options, (see Control):

| Symbol | Option |
|---|---|
|  | *SuperCool* |
|  | *SuperFrost* |
|  | *SabbathMode* |
|  | *Party timer* |
|  | *Bottle timer* |
|  | *Night mode* |
|  | Storage recommendations |
|  | Energy saving tips |
|  | Display settings |

# 4 Putting into operation

## 4.1 Transporting the appliance

**CAUTION**

Risk of injury and danger of damage as a result of incorrect transport!

▶ Transport the appliance in a packed condition.
▶ Transport the appliance upright.
▶ Do not transport the appliance without assistance.

## 4.2 Installing the appliance

**WARNING**

Fire hazard due to dampness!
If live parts or the mains lead become damp this may cause short circuits.

▶ The appliance is designed for use in enclosed areas. Do not operate the appliance outdoors or in areas where it is exposed to splash water or damp conditions.

**WARNING**

Risk of fire due to short circuit!
If the mains cable/connector of the appliance or of another appliance touch the rear of the appliance, the mains cable/connector may be damaged by the appliance vibrations, leading to a short circuit.

▶ Stand the appliance so that it is not touched by connectors or main cables.
▶ Do not plug the appliance or any others into sockets located near the rear of the appliance.

**WARNING**

Fire hazard due to refrigerant!
The refrigerant R 600a is environmentally friendly but flammable. Escaping refrigerant may ignite.

▶ Do not damage the piping of the refrigeration circuit.

**WARNING**

Fire hazard and danger of damage!

▶ Do not place appliances emitting heat e.g. microwaves, toasters etc. on the appliance!

**WARNING**

Blocked ventilation openings pose a risk of fire and damage!

▶ Always keep the ventilation openings clear. Always ensure that the appliance is properly ventilated!

**NOTICE**

Risk of damage due to condensate!

▶ Do not install the appliance directly alongside a further refrigerator/freezer.

❑ In the event that the appliance is damaged, contact the supplier immediately before connecting to the mains.
❑ The floor at the site must be flat and level.
❑ Do not install the appliance in a location where it is exposed to direct radiation of the sun, next to a cooker, heater and similar.
❑ Always stand the appliance backed directly to the wall using the enclosed wall spacers (see below).
❑ The appliance may be moved only when it is empty.
❑ Do not install the appliance without assistance.
❑ The more R 600a refrigerant there is in the appliance, the larger the room in which the appliance is standing needs to be. In rooms that are too small, a flammable mix of gas and air may be created if there is a leak. According to the EN 378 standard, every 11 g of R 600a refrigerant requires at least 1 $m^3$ space in the room for the appliance. The amount of refrigerant in your appliance is on the type plate inside the appliance.

▶ Remove the protective film from the outside of the appliance.

**NOTICE**
Risk of damage from stainless steel care products!
The **stainless steel doors** and **stainless steel side panels** are treated with a premium surface finish.
Stainless steel care products attack these surfaces.

- ▶ Only use a soft, clean cloth to wipe down **finished door and side panel surfaces** and **painted door and side panel surfaces**. To remove heavy dirt, use a little water or neutral detergent. Alternatively, you can use a micro-fibre cloth.

- ▶ Remove the protective film from the decorative trims and drawer fronts.
- ▶ Remove all transit supports.

Spacers must be used to achieve the declared energy consumption and to prevent condensation in the event of high surrounding humidity. This increases the appliance depth by about 15 mm. The appliance will work perfectly well without the spacers but will have a slightly higher energy consumption.

- ▶ If your appliance comes with wall spacers, mount these on the back of the appliance, bottom left and right.

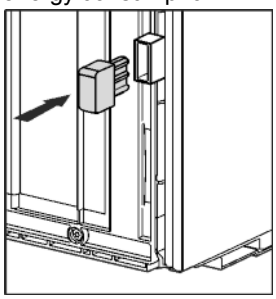

- ▶ Dispose of packaging material (see 4.5) .
- ▶ Align the appliance so that it stands firmly and on a level by applying the accompanying spanner to the adjustable-height feet (A) and using a spirit level.

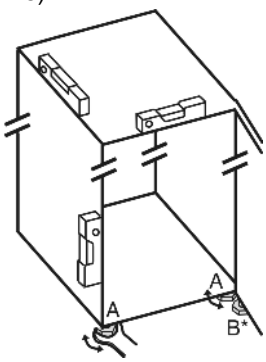


- ▶ Then support the door: Use saddle wrench SW10 to unscrew the base on mounting block (B) until it makes contact with the ground, then continue turning it for a further 90°.

**Note**
- ▶ Clean the appliance (see 6.4) .

If the appliance is installed in a very damp environment, condensate may form on the outside of the appliance.
- ▶ Always see to good ventilation at the installation site.

## 4.3 Reversing the door

If necessary, you can change the way the door opens:

Ensure that the following tools are available:

- ❑ Torx® 25 (T25)
- ❑ Torx® 15 (T15)
- ❑ Slotted screwdriver
- ❑ Saddle wrench SW10
- ❑ Spirit level
- ❑ Open-ended wrench supplied with the T25 tool
- ❑ If necessary, a cordless screwdriver
- ❑ Get a stepladder if necessary
- ❑ If necessary, a second person for assembly

### 4.3.1 Remove top soft-stop mechanism

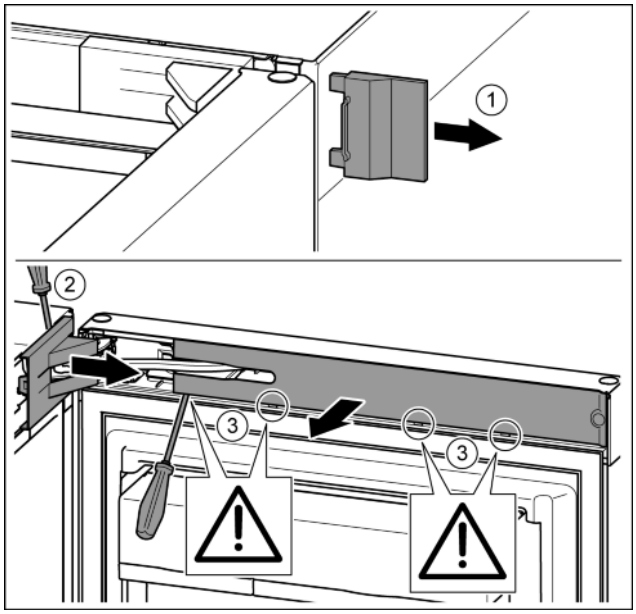


*Fig. 11*

- ▶ Open the top door.

**NOTICE**
Risk of damage!
If the door seal is damaged, the door may fail to close properly and the cooling will be inadequate.
- ▶ Do not damage the door seal with the screwdriver!

- ▶ Remove the outer cover. *Fig. 11 (1)*
- ▶ Unlatch and undo the bearing bracket cover with a screwdriver. Remove the bearing bracket cover. *Fig. 11 (2)*
- ▶ Unlatch the cover plate with a slotted screwdriver and swivel it to one side. *Fig. 11 (3)*

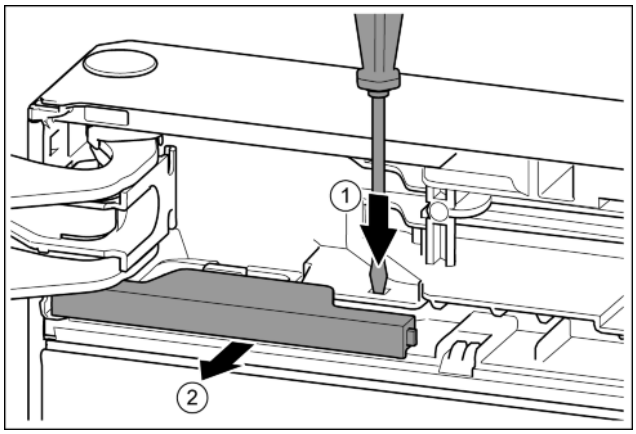


*Fig. 12*

- ▶ Press tab with Phillips screwdriver. *Fig. 12 (1)*
- ▶ Remove cover from the locking fixture. *Fig. 12 (2)*

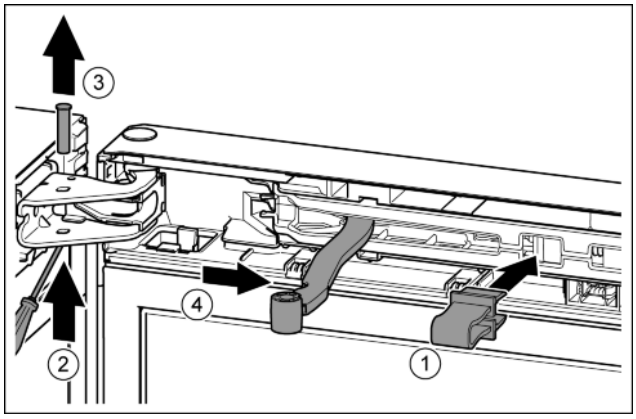


*Fig. 13*

**CAUTION**
Crushing hazard by joint folding up!
▶ Engage safety device.

▶ Engage the safety device in the opening. *Fig. 13 (1)*
▶ Undo the bolt with a T15 screwdriver. *Fig. 13 (2)*
▶ Remove the bolt in an upward direction. *Fig. 13 (3)*
▶ Turn the hinge in the direction of the door. *Fig. 13 (4)*

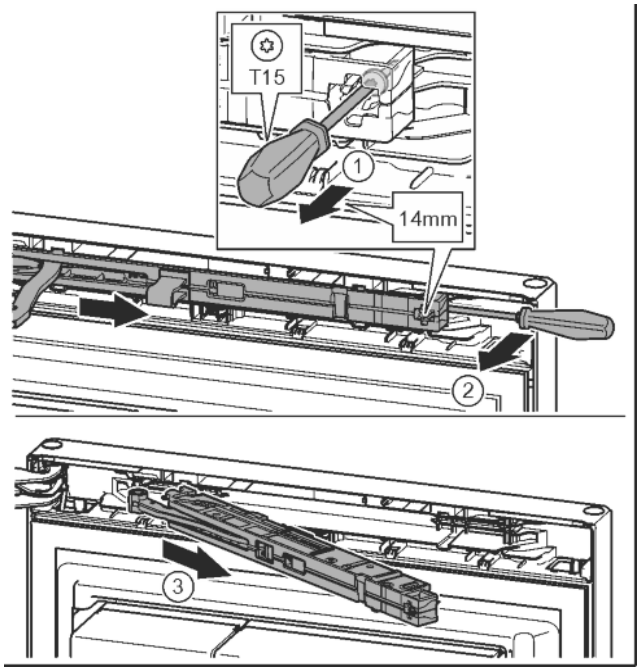


*Fig. 14*
▶ Undo the soft-stop mechanism screw with a T15 screwdriver approx. 14 mm. *Fig. 14 (1)*
▶ Insert a screwdriver behind the soft-stop mechanism on the handle side and rotate forwards. *Fig. 14 (2)*
▶ Remove soft-stop mechanism. *Fig. 14 (3)*

### 4.3.2 Remove bottom soft-stop mechanism

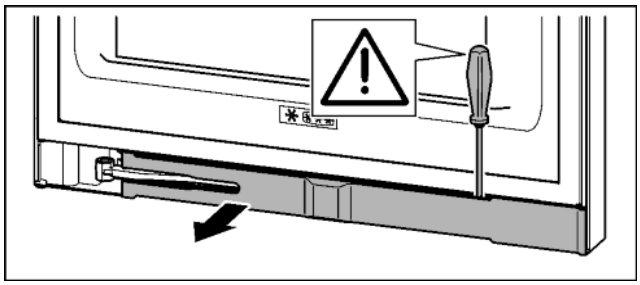

*Fig. 15*
▶ Open the bottom door.

**NOTICE**
Risk of damage!
If the door seal is damaged, the door may fail to close properly and the cooling will be inadequate.
▶ Do not damage the door seal with the screwdriver!

▶ Unlatch the cover plate with a slotted screwdriver and swivel it to one side.

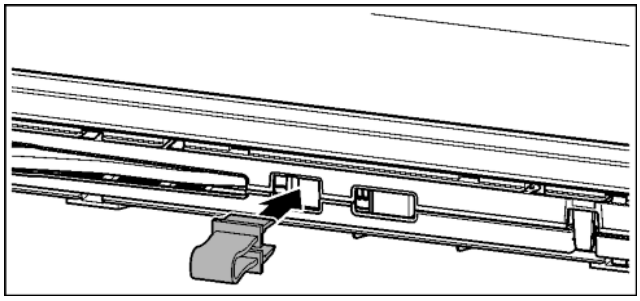

*Fig. 16*

**CAUTION**
Crushing hazard by joint folding up!
▶ Engage safety device.

▶ Engage the safety device in the opening.

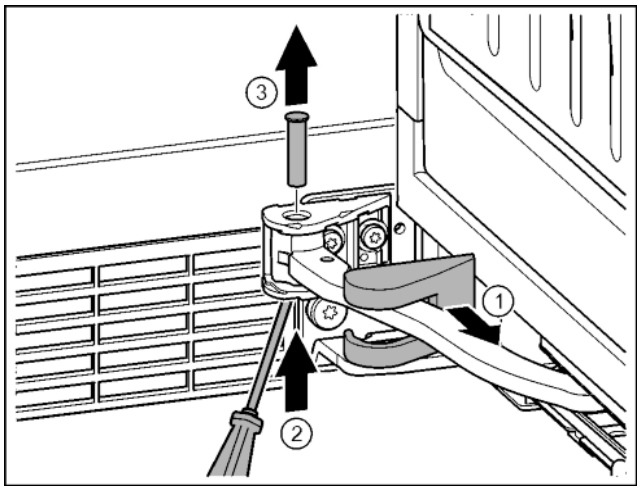


*Fig. 17*
▶ Remove the mounting block cover and push it along the hinge. *Fig. 17 (1)*
▶ Lift bolt with finger or screwdriver from below. *Fig. 17 (2)*
▶ Insert the screwdriver under the bolt head and remove. *Fig. 17 (3)*

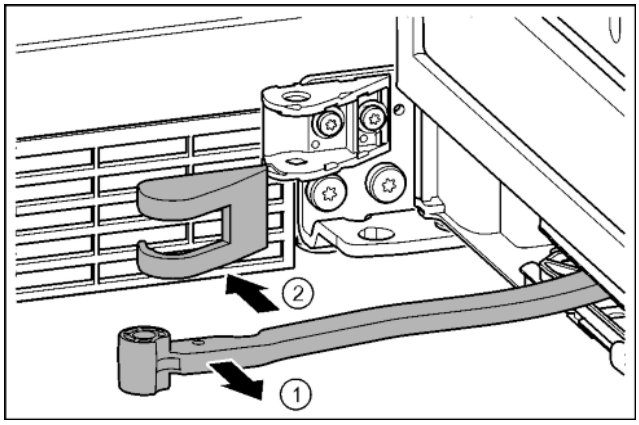


*Fig. 18*

- ▶ Turn the hinge in the direction of the door. *Fig. 18 (1)*
- ▶ Remove the mounting block cover. *Fig. 18 (2)*

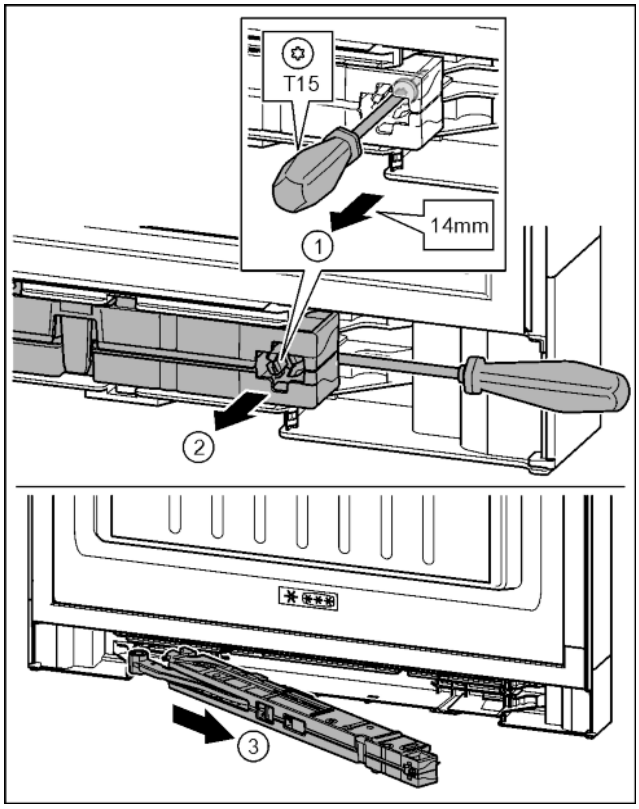


*Fig. 19*

- ▶ Undo the soft-stop mechanism screw with a T15 screwdriver approx. 5 mm. *Fig. 19 (1)*
- ▶ Insert the screwdriver on the handle side behind the soft-stop mechanism. Turn the unit forwards. *Fig. 19 (2)*
- ▶ Remove the unit. *Fig. 19 (3)*
- ▶ Set aside the soft-stop mechanism.

### 4.3.3 Remove the cable connection

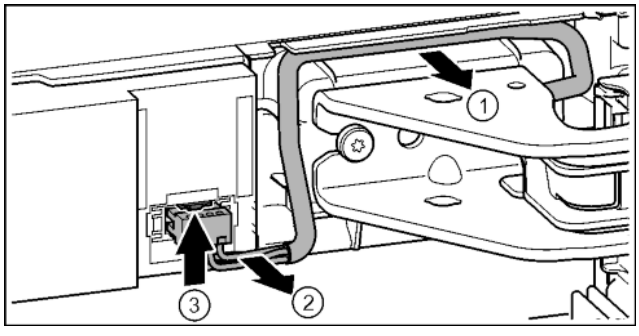


*Fig. 20*

- ▶ Carefully remove the cable over the bearing bracket from the guide. *Fig. 20 (1)*
- ▶ Carefully remove the cable strands from the channel. *Fig. 20 (2)*
- ▶ Press the lug upwards and carefully remove the connector. *Fig. 20 (3)*

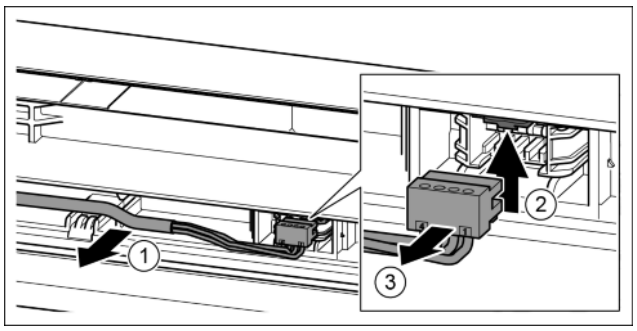


*Fig. 21*

- ▶ Carefully remove the grey cable from the guide in the door. *Fig. 21 (1)*
- ▶ Press the lug upwards. *Fig. 21 (2)*
- ▶ Carefully remove the connector. *Fig. 21 (3)*

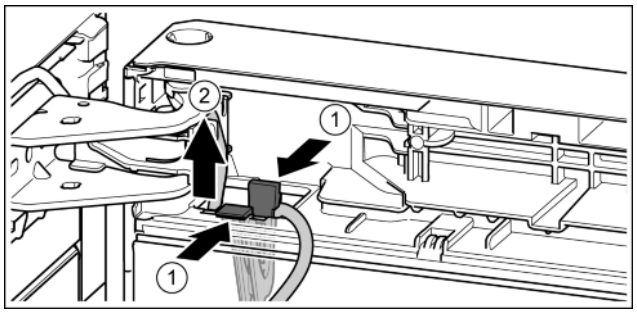


*Fig. 22*

- ▶ Press the lug. *Fig. 22 (1)*
- ▶ Remove the cable holder with its cable. *Fig. 22 (2)*

### 4.3.4 Removing the top door

**Note**

- ▶ Remove any food from the door racks before removing the door, so that no food falls out.



*** Depending on model and options**

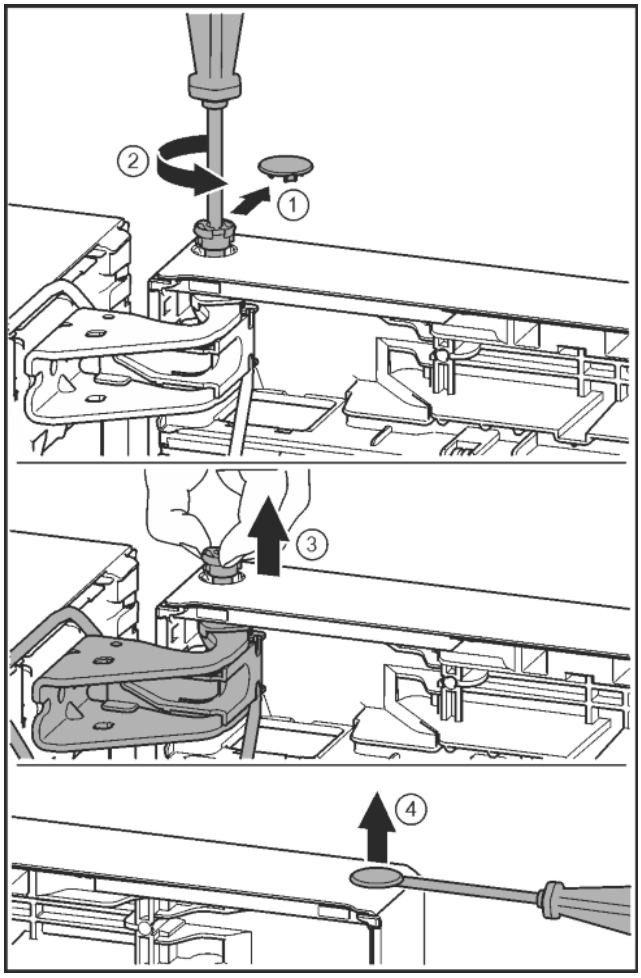


*Fig. 23*

**CAUTION**
Risk of injury if the door tips!
- ▶ Take good hold of the door.
- ▶ Set down the door carefully.

- ▶ Carefully remove the safety cover. *Fig. 23 (1)*
- ▶ Undo the bolt a little with a T15 screwdriver. *Fig. 23 (2)*
- ▶ Hold the door and remove pins with your fingers. *Fig. 23 (3)*
- ▶ Lift door and place to one side.
- ▶ Carefully lift the plugs out of the door bearing bush with a slotted screwdriver and remove. *Fig. 23 (4)*

### 4.3.5 Removing the lower door

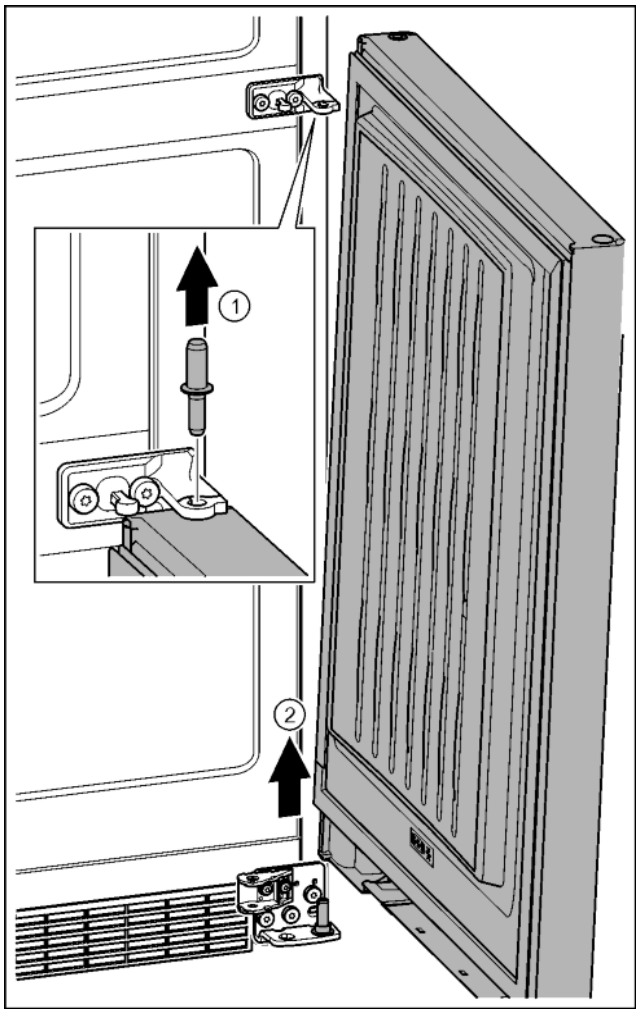


*Fig. 24*

**CAUTION**
Risk of injury if the door tips!
- ▶ Take good hold of the door.
- ▶ Set down the door carefully.

- ▶ Remove the bolts in an upward direction. *Fig. 24 (1)*
- ▶ Swivel the door out, pull it upwards and set it to one side. *Fig. 24 (2)*

### 4.3.6 Changing the upper storage parts

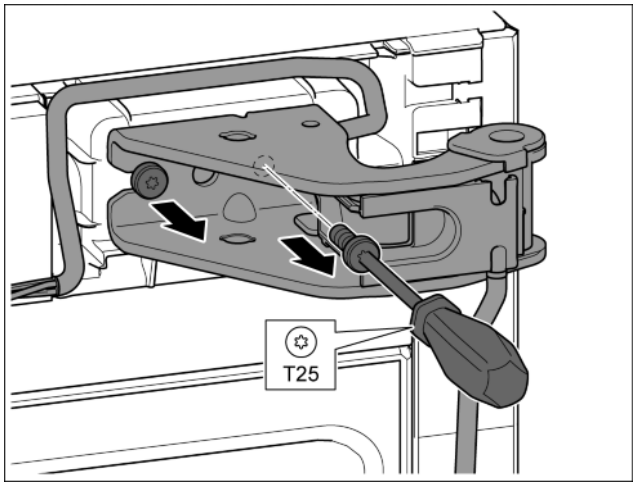


*Fig. 25*

▶ Remove both screws with the T25 screwdriver.
▶ Lift and remove the mounting block and cable.

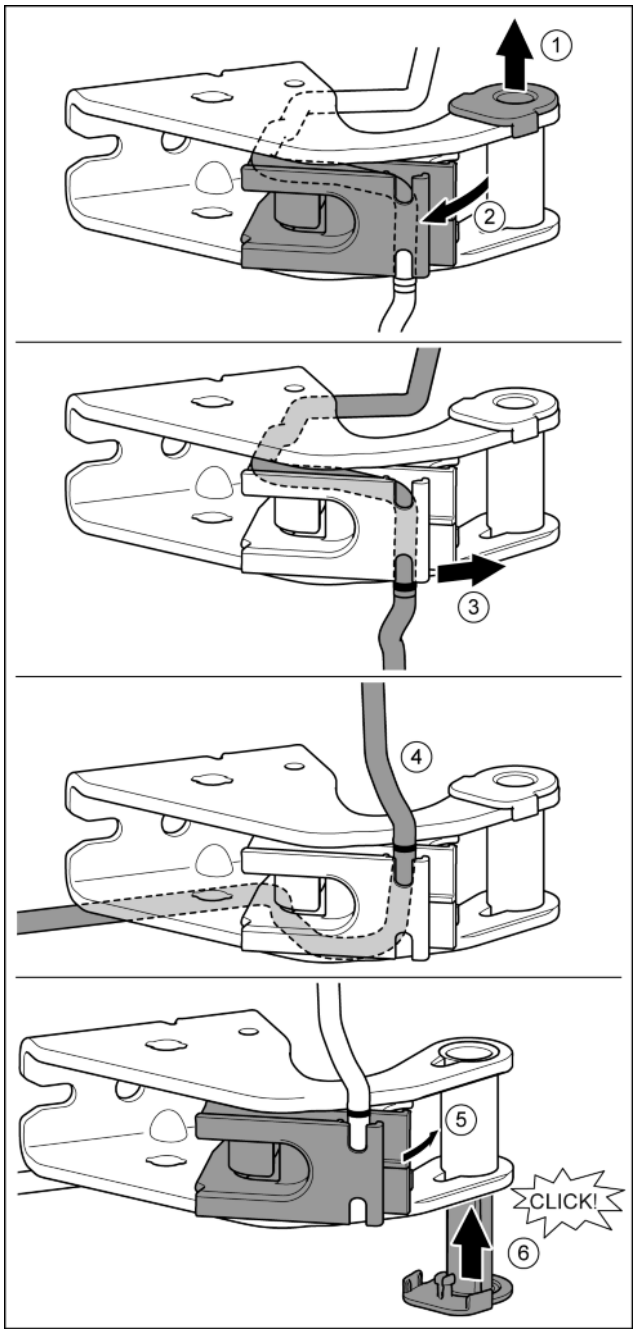


*Fig. 26*

▶ Pull the bearing bush out of the guide. *Fig. 26 (1)*
▶ Swing the cable bracket out. *Fig. 26 (2)*
▶ Remove the cable from the guide. *Fig. 26 (3)*
▶ Insert the cable mirror inverted. *Fig. 26 (4)*
▷ The mark must be positioned on the edge of the cable bracket.
▶ Swing the cable bracket in. *Fig. 26 (5)*
▶ Insert bearing bush from the other side and click into place. *Fig. 26 (6)*

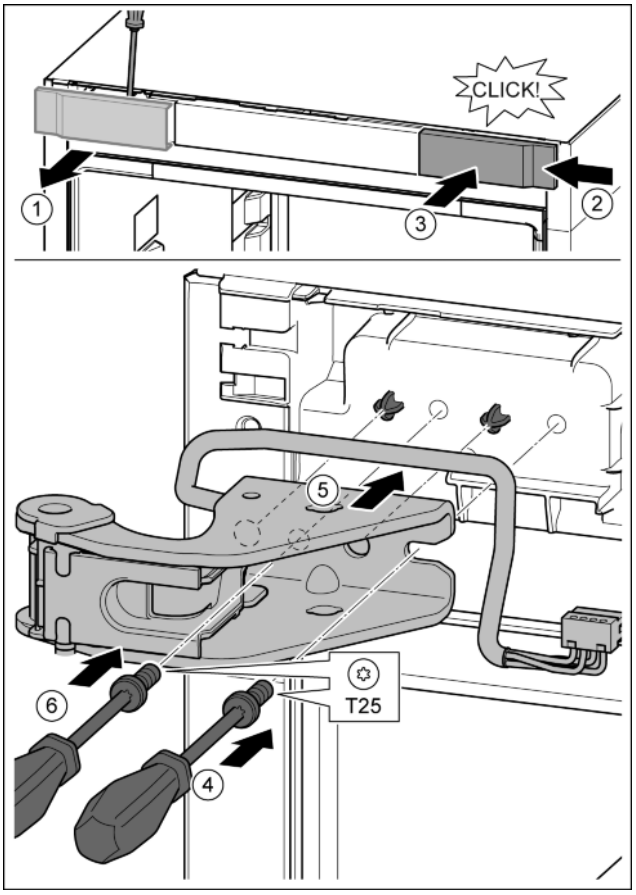


*Fig. 27*

▶ Undo the cover with a screwdriver and remove sideways. *Fig. 27 (1)*
▶ Rotate the cover 180° and clip onto the other side from the right. *Fig. 27 (2)*
▶ Click the cover into place. *Fig. 27 (3)*
▶ Position the screw with a T25 screwdriver. *Fig. 27 (4)*
▶ Position the upper bearing bracket. *Fig. 27 (5)*
▷ Place the pins in the screw holes provided.
▶ Tighten the screw. *Fig. 27 (4)*
▶ Insert the screw with a T25 screwdriver and tighten. *Fig. 27 (6)*

### 4.3.7 Changing the middle storage sections

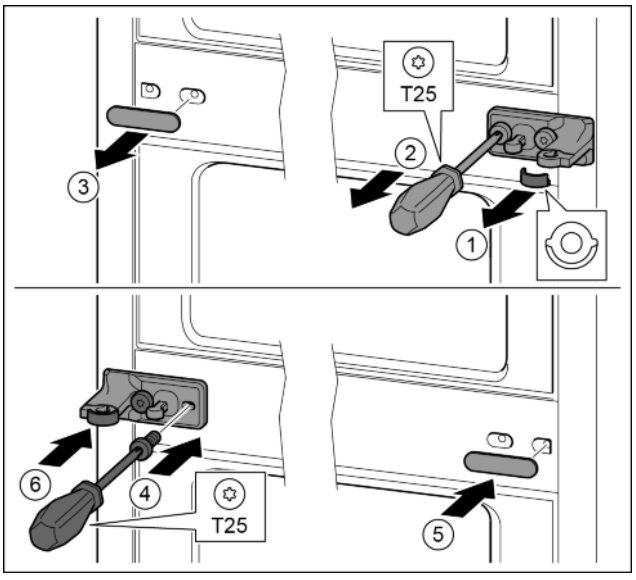


*Fig. 28*

▶ Remove the disc. *Fig. 28 (1)*
▶ Remove the screws with the T25 screwdriver. *Fig. 28 (2)*

- ▶ Remove the cover carefully. *Fig. 28 (3)*
- ▶ Screw the bearing bracket and the film rotated 180° firmly onto the other side. *Fig. 28 (4)*
- ▶ Attach the cover rotated 180° onto the other side. *Fig. 28 (5)*
- ▶ Push the disc in from the front. *Fig. 28 (6)*

### 4.3.8 Changing the lower storage parts

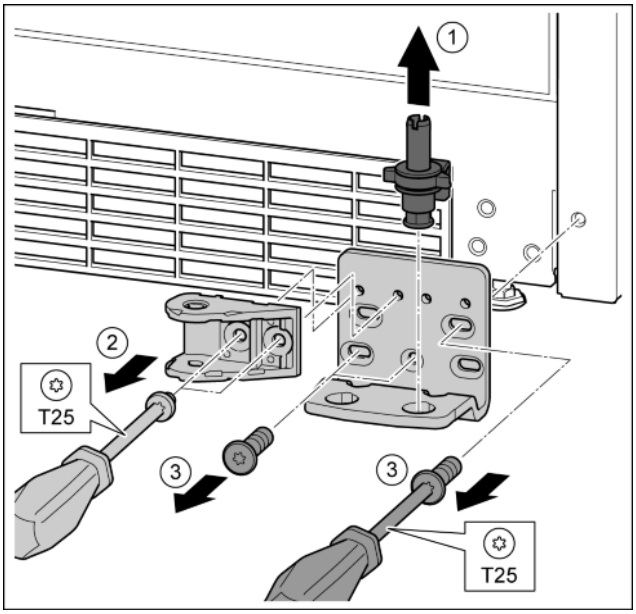


*Fig. 29*

- ▶ Lift the bearing bolts upwards and remove. *Fig. 29 (1)*
- ▶ Undo the screws with a T25 screwdriver and remove the mounting block. *Fig. 29 (2)*
- ▶ Remove the screws with the T25 screwdriver and remove the bearing bracket. *Fig. 29 (3)*

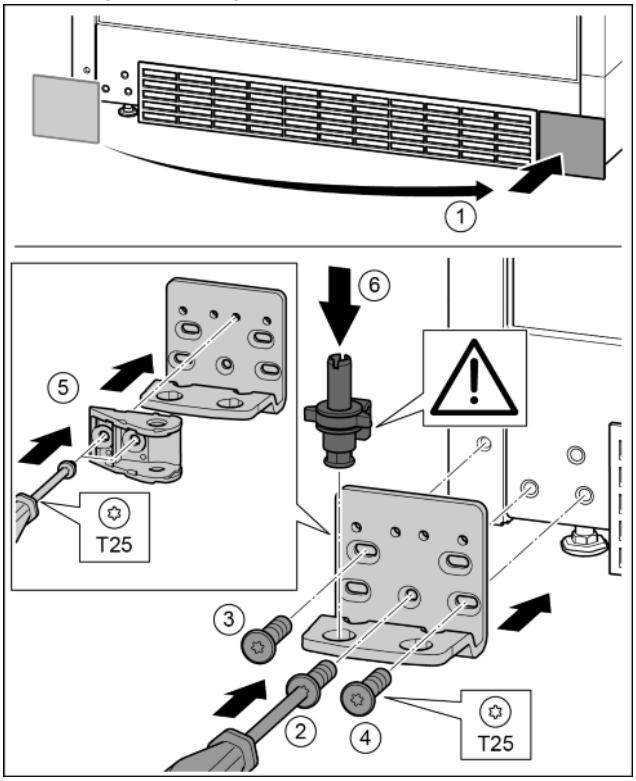


*Fig. 30*

- ▶ Remove the cover and fix onto the other side. *Fig. 30 (1)*
- ▶ Place the bearing bracket on the other side and screw in with the T25 screwdriver. Start with screw 2 at the bottom in the middle. *Fig. 30 (2)*
- ▶ Screw in screws 3 and 4. *Fig. 30 (3, 4)*
- ▶ Rotate the door mount 180°. Screw in with a T25 screwdriver on the other side of the bearing bracket. *Fig. 30 (5)*
- ▶ Insert the bearing bolts completely. Ensure here that the catch mechanism points backwards. *Fig. 30 (6)*

### 4.3.9 Changing the handles

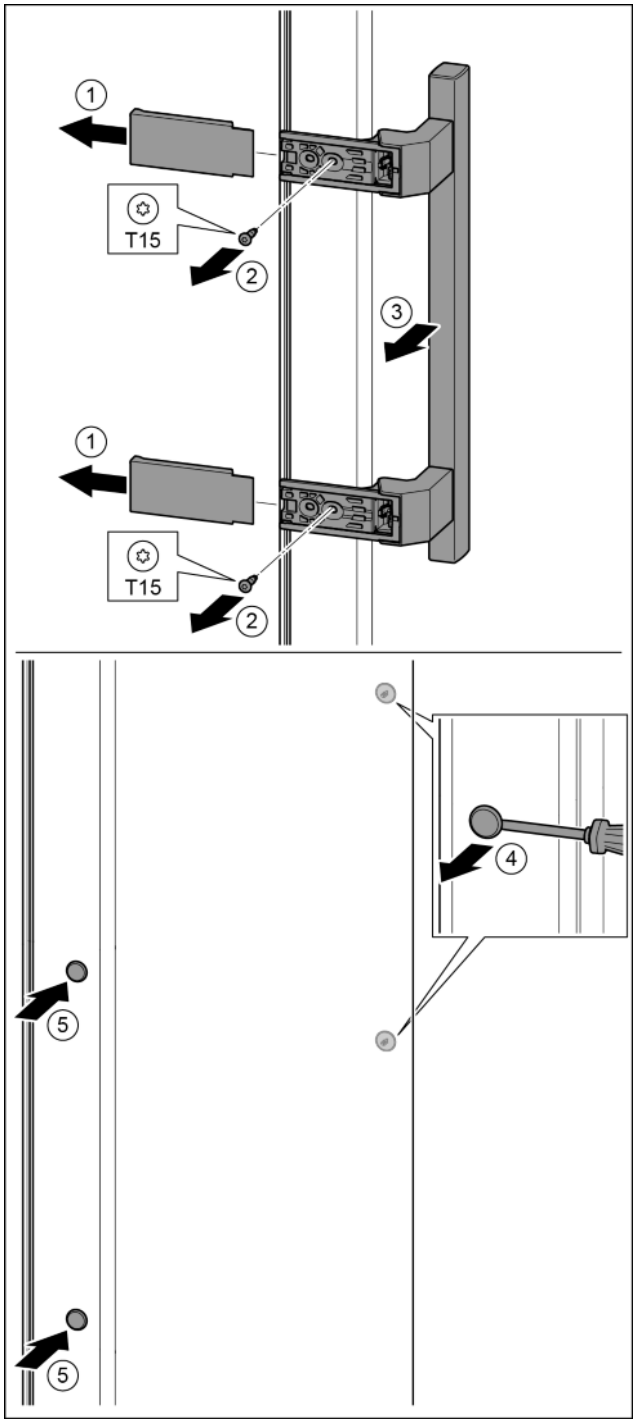


*Fig. 31*

- ▶ Remove the cover. *Fig. 31 (1)*
- ▶ Remove the screws with the T15 screwdriver. *Fig. 31 (2)*
- ▶ Remove the handle. *Fig. 31 (3)*
- ▶ Carefully lift up the plugs and remove them with a slotted screwdriver. *Fig. 31 (4)*
- ▶ Insert the plugs again on the other side. *Fig. 31 (5)*

EN

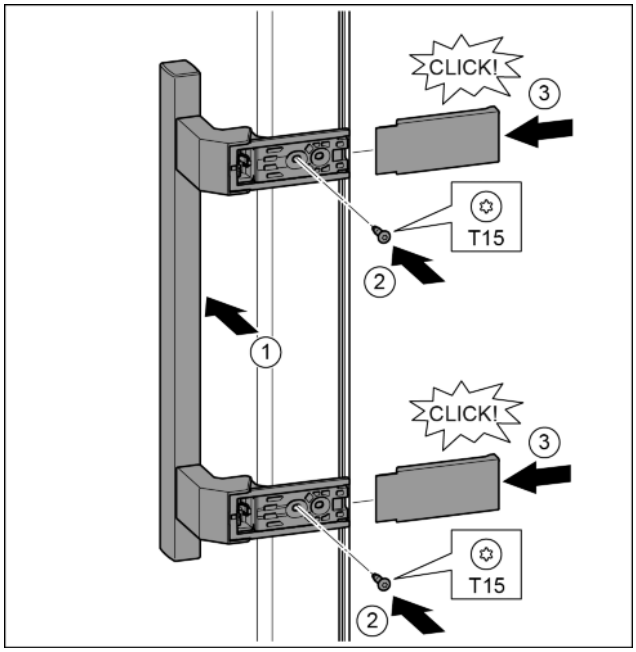


*Fig. 32*

▶ Position the handle on the other side. *Fig. 32 (1)*
▷ The screw holes must be exactly above each other.
▶ Tighten the screws with the T15 screwdriver. *Fig. 32 (2)*
▶ Position the covers on the side and push in. *Fig. 32 (3)*
▷ Ensure that it clicks into place.

### 4.3.10 Fitting the lower door

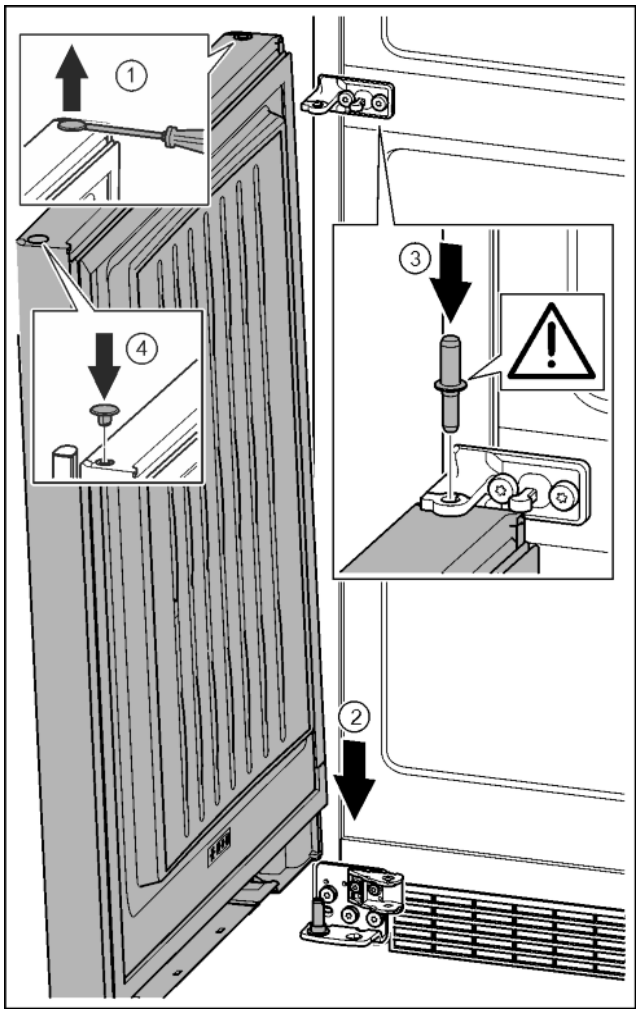


*Fig. 33*

▶ Carefully lift up the plugs and remove them with a slotted screwdriver. *Fig. 33 (1)*
▶ Position the door from above onto the lower bearing bolts. *Fig. 33 (2)*
▶ Insert the middle bearing bolt through the middle bearing bracket into the lower door. Ensure here that the catch mechanism points backwards. *Fig. 33 (3)*
▶ Insert the plugs again on the other side of the door. *Fig. 33 (4)*

### 4.3.11 Fit upper door

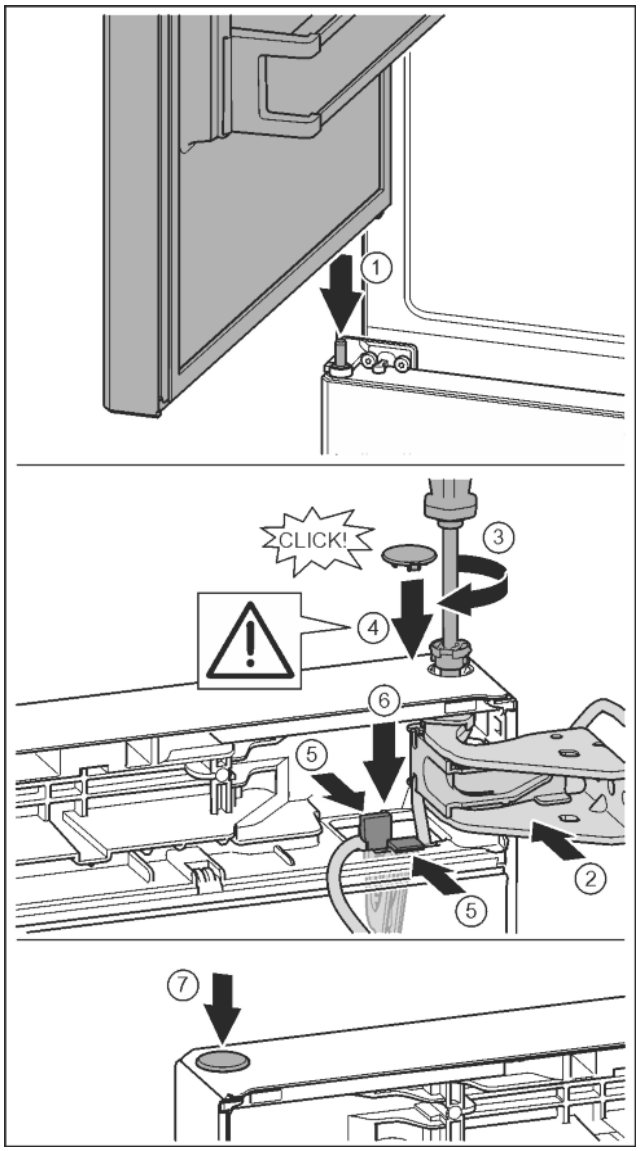


*Fig. 34*

▶ Place the upper door on the middle mounting bolt *Fig. 34 (1)*
▶ Align top of door with aperture in mounting block. *Fig. 34 (2)*
▶ Insert the bolt and tighten with a T15 screwdriver. *Fig. 34 (3)*
▶ Fit protective cover to protect the door: Install the protective cover and check that it is attached to the door. If not, insert the bolt fully. *Fig. 34 (4)*
▶ Insert the holder with its cable into the opening. At the same time, the lug with the longer opening must point forward. *Fig. 34 (5)*
▶ Press the bracket downwards until the lug clicks into place. *Fig. 34 (6)*
▶ Insert the plugs. *Fig. 34 (7)*

EN

### 4.3.12 Connecting the cable

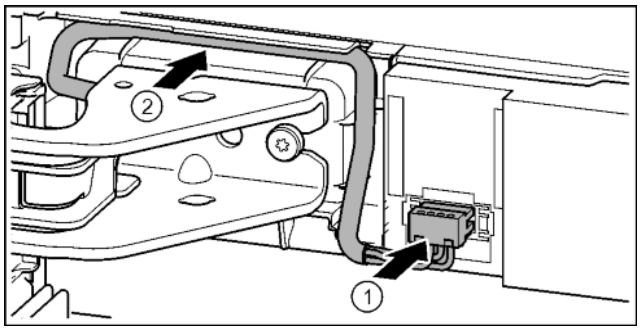


*Fig. 35*

▶ Click the connector into place above the upper mounting block and carefully place the cable strands into the channel. *Fig. 35 (1)*

▶ Carefully position the grey cable in the guide above the top bearing bracket. *Fig. 35 (2)*

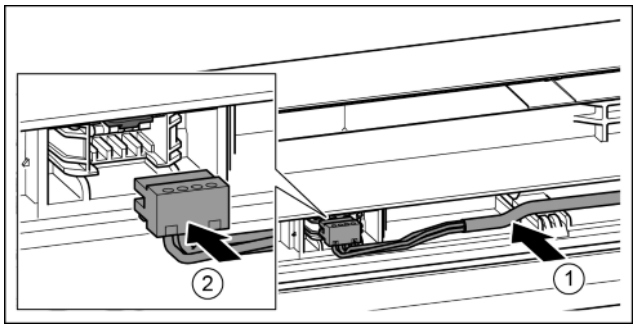


*Fig. 36*

▶ Insert the grey cable into the guide in the top door. *Fig. 36 (1)*

▶ Insert connector. *Fig. 36 (2)*

▶ Loop remaining cable in the guide, as required.

### 4.3.13 Aligning the doors

**WARNING**

Risk of injury due to the door dropping out!

If the bearing parts are not screwed into place firmly enough, the door may drop out. This may lead to severe injuries. What is more, the door may not close and therefore the appliance may fail to cool properly.

▶ Screw the turn hinges firmly into place with 4 Nm.

▶ Check all of the screws and retighten if necessary.

▶ If necessary align the door over the two slotted holes in the bottom bearing bracket and the middle bearing bracket so that it is flush with the appliance housing. To do this undo the middle screw in the bottom bearing bracket with the T25 tool supplied. Undo the remaining screws a little with the T25 tool or with a T25 screwdriver and align over the slotted holes. Undo the screws in the middle bearing bracket with the T25 tool and align the middle bearing bracket over the slotted holes.

▶ Support the door: Use saddle wrench SW10 to unscrew and remove the base on the mounting block until it makes contact with the ground, then continue turning it for a further 90°.

### 4.3.14 Fit the bottom soft-stop mechanism

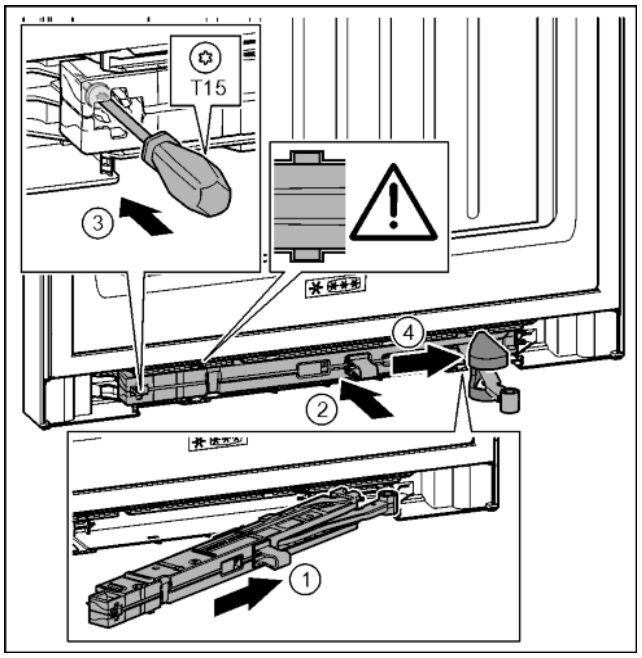


*Fig. 37*

▶ Slide the soft-stop mechanism on the bearing bracket at an angle into the gap as far as the limit stop. *Fig. 37 (1)*

▶ Slide the soft-stop mechanism fully into the gap. *Fig. 37 (2)*

▷ The unit is positioned correctly when the rib on the soft-stop mechanism is in the guide.

▶ Tighten the screw with the T15 screwdriver. *Fig. 37 (3)*

▶ Slide the cover over the hinge. *Fig. 37 (4)*

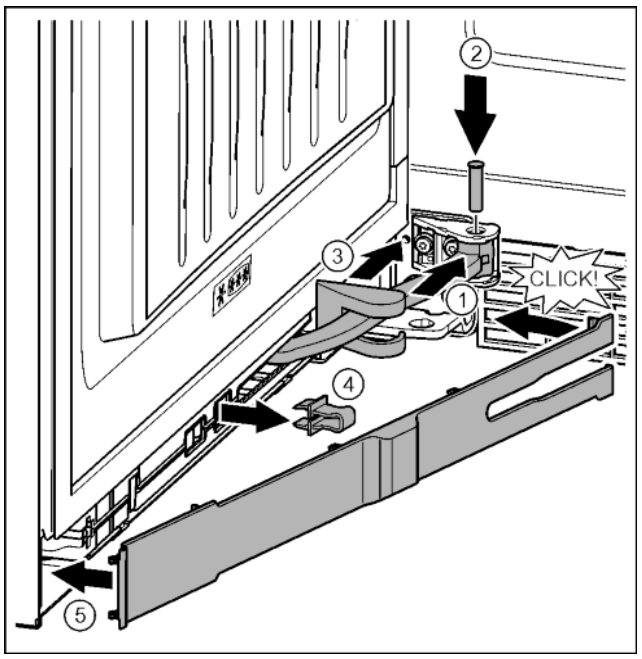


*Fig. 38*

The door is open 90°.

▶ Turn the hinge in the mount. *Fig. 38 (1)*

▶ Insert the bolt with a T15 screwdriver in the mount and hinge. Ensure here that the catch is properly fitted in the channel. *Fig. 38 (2)*

▶ Push the mounting block cover along the hinge and fit onto the mount. *Fig. 38 (3)*

▶ Remove safety device. *Fig. 38 (4)*

▶ Position the cover plate on the handle side and swivel into place. *Fig. 38 (5)*

▷ The cover plate is clicked into place.

▶ Close the bottom door.

### 4.3.15 Fit the top soft-stop mechanism

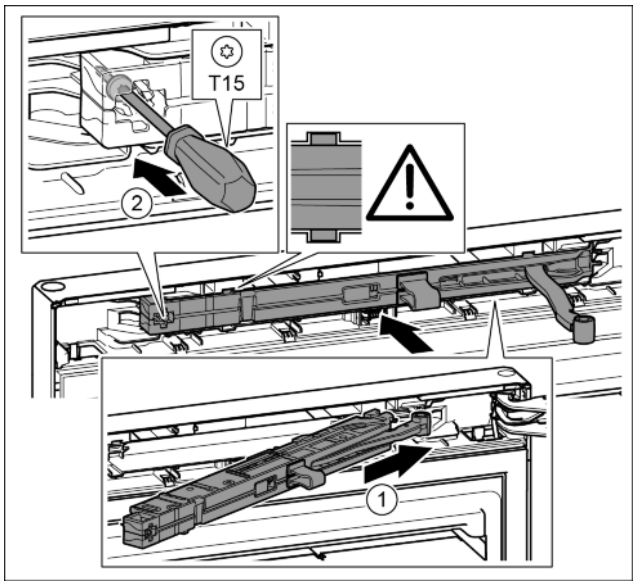


*Fig. 39*

- ▶ Slide the soft-stop mechanism on the bearing bracket at an angle into the gap as far as the limit stop. *Fig. 39 (1)*
- ▶ Slide the unit in fully.
- ▷ The unit is positioned correctly when the rib on the soft-stop mechanism is in the guide.
- ▶ Tighten the screw with the T15 screwdriver. *Fig. 39 (2)*

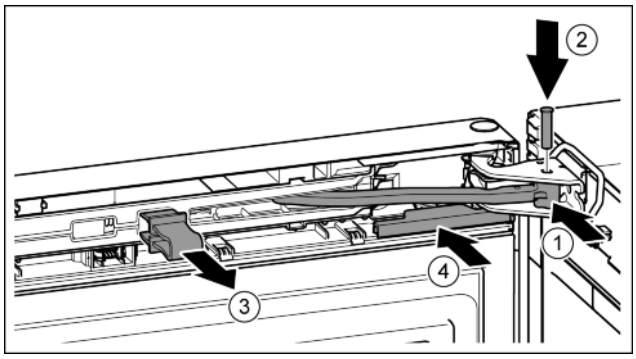


*Fig. 40*

The door is open 90°.

- ▶ Turn the hinge in the bearing bracket. *Fig. 40 (1)*
- ▶ Insert bolt into the bearing bracket and hinge. Ensure here that the catch is properly fitted in the channel. *Fig. 40 (2)*
- ▶ Remove safety device. *Fig. 40 (3)*
- ▶ Slide on the cover. *Fig. 40 (4)*

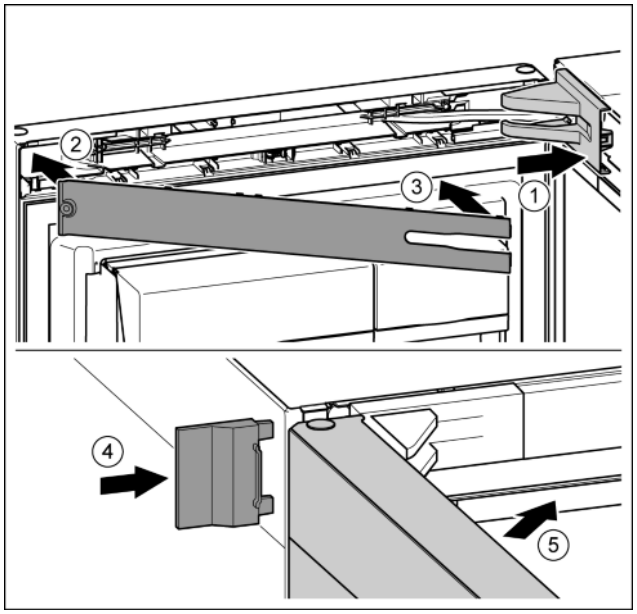


*Fig. 41*

- ▶ Put the mounting block cover on and click into place. If necessary push apart carefully. *Fig. 41 (1)*
- ▶ Position the cover plate. *Fig. 41 (2)*
- ▶ Swivel the cover plate and click into place. *Fig. 41 (3)*
- ▶ Push the external cover on. *Fig. 41 (4)*
- ▶ Close the upper door. *Fig. 41 (5)*

## 4.4 Insertion into a row of kitchen units

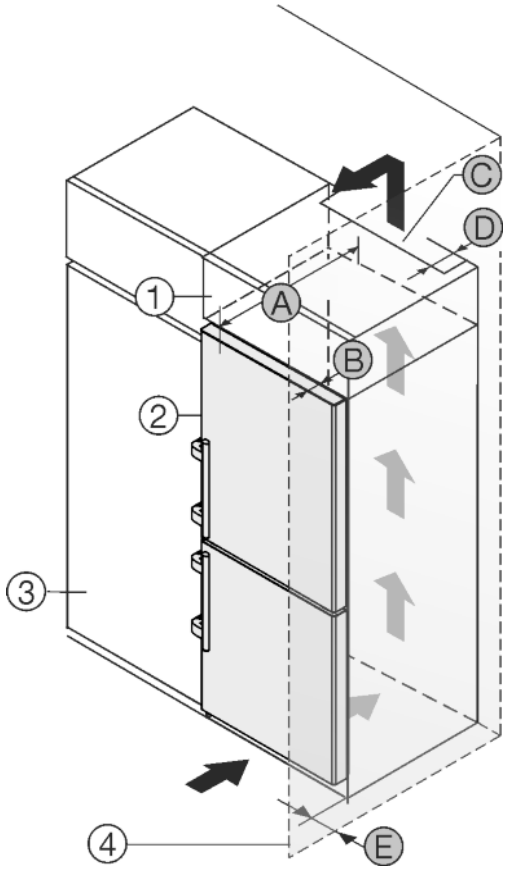


*Fig. 42*

| A [mm] | B [mm] | C [cm²] | D [mm] | E [mm] |
|---|---|---|---|---|
| 665 x | 65 | Min. 300 | Min. 50 | Min. 46 |

x If wall spacers are used, the dimensions increase by 15 mm (see 4.2) .

The dimensions apply for an opening angle of 90 °. Spacing angles will vary according to the opening angle.

The appliance can be built into kitchen units. A top cupboard *Fig. 42 (2)* can be added above the appliance in order to bring the appliance *Fig. 42 (1)* up to the height of the fitted kitchen units.

The appliance can be installed right next to the kitchen cabinet *Fig. 42 (3)*. The appliance must stick out by the depth *Fig. 42 (B)* from the front of the cabinet so that the doors can be opened fully. The appliance may protrude further depending on the depth of the kitchen cabinets and whether wall spacers are used.

**NOTICE**
Danger of overheating due to insufficient air ventilation!
The compressor may be damaged if there is insufficient air ventilation.
▶ Take care to ensure adequate air ventilation.
▶ Observe the ventilation requirements.

Ventilation requirements:

- Spacer ribs on the back of the appliance provide sufficient air ventilation. In the final appliance position, these must not be placed in recesses or cut-outs.
- There must be a ventilation shaft with the depth *Fig. 42 (D)* at the back of the top cupboard over the entire width of the cupboard.
- The ventilation shaft *Fig. 42 (C)* must be observed under the ceiling.
- the larger the ventilation space, the more energy-saving the appliance is in operation.

If the appliance is installed with the hinges next to a wall *Fig. 42 (4)* the distance *Fig. 42 (E)* between the appliance and the wall must be observed. This is how far the handle protrudes when the door is open.

## 4.5 Disposing of packaging

**WARNING**
Danger of suffocation due to packing material and plastic film!
▶ Do not allow children to play with packing material.

The packaging is made of recyclable materials:

- corrugated board/cardboard
- expanded polystyrene parts
- polythene bags and sheets
- polypropylene straps
- nailed wooden frame with polyethylene panel*

▶ Take the packaging material to an official collecting point.

## 4.6 Connecting the appliance

**WARNING**
Failure to connect properly
Fire.
▶ Do not use an extension cable.
▶ Do not use distributor blocks.

**NOTICE**
Failure to connect properly
Damage to the electronics.
▶ Do not use a standalone inverter.
▶ Do not use an energy saving plug.

**Note**
Only use the power connection lead supplied.
▶ A longer power connection lead can be ordered from Customer Service.

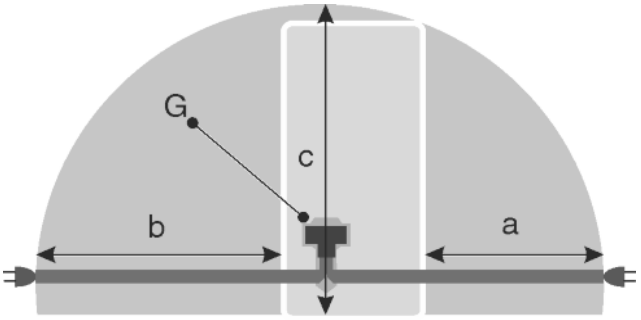


*Fig. 43*

For 600 mm wide appliances:

| a | b | c | G |
|---|---|---|---|
| ~ 1400 mm | ~ 1800 mm | ~ 2100 mm | Appliance plugs |

For 700 mm wide appliances:

| a | b | c | G |
|---|---|---|---|
| ~ 1350 mm | ~ 1750 mm | ~ 2100 mm | Appliance plugs |

Ensure that the following conditions are met:

- The type of current and voltage at the installation site correspond to the information on the model plate (see Appliance at a glance).
- The socket is earthed according to the regulations and fused.
- The fuse tripping current is between 10 and 16 A.
- The socket is easily accessible.
- The socket is outside the back of the appliance area in the specified area *Fig. 43 (a, b, c)*.

▶ Check the electrical connection.
▶ Insert the appliance plug *Fig. 43 (G)* into the back of the appliance. Ensure that it clicks into place.
▶ Connect the power plug to the power supply.
▷ The Liebherr logo appears on the screen.
▷ The display switches to the standby symbol.

## 4.7 Switching on the appliance

**Note**
Demonstration mode is active: *DemoMode active!*, appears on the screen.
▶ Cancelling demo mode. (see Malfunction).

**Note**
The manufacturer recommends:
▶ Store frozen produce at -18 °C or colder.

Connect and switch on appliance approx. 2 hours before loading for the first time. (see 4.6)

### 4.7.1 Initial operation

The basic system settings are defined in 4 steps.
▶ Press the standby symbol.

**Step 1: Set language**
▶ Display other languages: Press navigation arrows if required.
▶ Choose language.: Press selection indicator next to selected language.
▶ Press *Next*.

**Step 2: Set date**

▶ Choose date format: Press selection indicator next to selected date format.
▶ Set day, month and year: Press navigation arrows repeatedly or press and hold.
▶ Display date on status screen: Press status button On/Off if required
▶ Press *Next*.

**Step 3: Set time**
▶ Choose time format: Press selection indicator next to selected time format.
▶ Set hours and minutes: Press navigation arrows repeatedly or press and hold.
▶ Press *Next*.

**Step 4: Set temperature unit**
▶ Choose temperature unit: Press selection indicator next to selected temperature unit.
▶ Press *Next*.
▷ The display switches to the home screen.
▷ The appliance is switched on and set to the displayed temperature.

### 4.7.2 Further operation

If the appliance has been disconnected from the mains supply, the language needs to be reset.
▶ Display other languages: Press navigation arrows if required.
▶ Choose language.: Press selection indicator next to selected language.
▶ Press *Next*.
▷ The display switches to the home screen.
▷ The appliance starts with the last settings in the *Day-to-Day programme*.

### 4.7.3 Switch on appliance

**If the standby symbol is displayed in the fridge compartment field, the BioFresh compartment field and the freezer compartment field:**
▶ Press freezer department or fridge department field.
▶ Display more temperature values: Press navigation arrows if required.
▶ Press temperature value.
▷ The appliance is switched on and set to the displayed temperature.

**Screen is black:**
▶ Press screen.
▷ The standby symbol appears on the screen.

**The standby symbol is displayed on the whole screen:**
▶ Press standby symbol.
▶ The display switches to the home screen.
▷ The appliance starts with the last settings in the *Day-to-Day programme*.

### 4.7.4 Switching the fridge and BioFresh compartments on

If the standby symbol is displayed in the fridge compartment field and the BioFresh compartment field.
▶ Press fridge compartment field.
▶ Display more temperature values: Press navigation arrows if required.
▶ Press temperature value.

## 4.8 Inserting the FreshAir filter.

The supplied FreshAir filter guarantees optimum air quality. It should be changed every 12 months. When the reminder function is set, a message on the display prompts you to change it.

▶ Remove the fan cover.

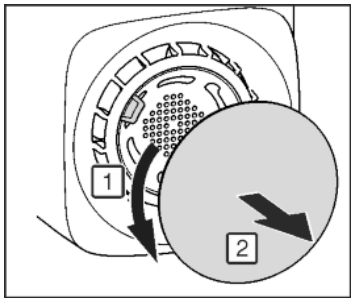


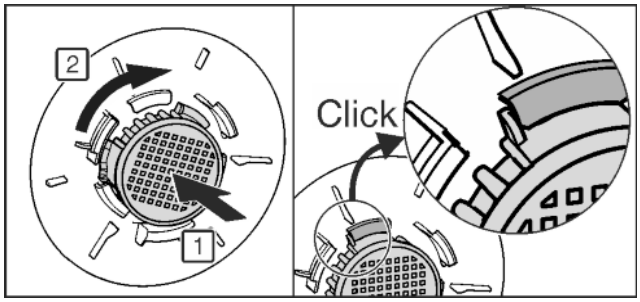


*Fig. 44*

▶ Place the FreshAir filter into the cover and turn to the right.
▶ Ensure that the filter clicks into place.
▶ Replace the fan cover again.

**Switch on reminder function**
▶ Press menu.
▶ Navigate to *System settings*: Press navigation arrows.
▶ Press *System Settings*.
▶ Navigate to *Appliance filter*: Press navigation arrows.
▶ Press *Appliance filter*.
▶ Press *FreshAir filter*.
▶ Press status button On/Off
▷ A message prompts you to change it once the reminder function has expired.

## 4.9 Activating the clean ventilation grill reminder function

The ventilation grill must be cleaned at least once a year for sufficient ventilation. When the reminder function is set, a message on the display prompts you to clean it.
▶ Press menu.
▶ Navigate to *System settings*: Press navigation arrows.
▶ Press *System Settings*.
▶ Navigate to *Appliance filter*: Press navigation arrows.
▶ Press *Appliance filter*.
▶ Press *Ventilation grill*.
▶ Press status button On/Off
▷ A message prompts you to clean it once the reminder function has expired.

# 5 Control

## 5.1 System settings

Basic settings can be made in *System settings*.
▶ Press menu.
▶ Navigate to *System settings*: Press navigation arrows.
▶ Press *System Settings*.
▶ Navigate to relevant system setting: Press navigation arrows.

The following system settings are listed:
- *Appliance filter*: (see Putting into operation)
- *Appliance information*: (see Maintenance)

### 5.1.1 Set language

The display language can be set in *Language*.
▶ Press *Language*.
▶ Display other languages: Press navigation arrows.
▶ Press selection indicator next to selected language.

### 5.1.2 Set date

The date format and date can be set in *Date*.
▶ Press *Date*.
▶ Choose date format: Press selection indicator next to selected date format.
▶ Set day, month and year: Press navigation arrows repeatedly or press and hold.
▶ Display or delete date on status screen: Press status button On/Off if required

### 5.1.3 Set time

Time and time display can be set in *Time*.
▶ Press *Time*.
▶ Choose time format: Press selection indicator next to selected time format.
▶ Set hours and minutes: Press navigation arrows repeatedly or press and hold.

### 5.1.4 Set temperature unit

The temperature unit of °C and °F can be set in *Temperature units*.
▶ Press *Temperature units*.
▶ Press selection indicator next to selected temperature unit.

### 5.1.5 Set screen brightness

Under *Display* you can set the brightness of the Status screen, the time until the Status screen darkens and you can have the screen switch off after 24 hours.
▶ Press *Display*.
▶ Set the Status screen brightness from levels 1 to 5: Press navigation arrows.
▶ Set the time before the screen darkens, from 30 seconds to 10 minutes: Press navigation arrows.
▶ Enable/disable screen auto switch-off after 24 hours: Press status button On/Off if required.

### 5.1.6 Setting audible signals

Audible signals for the following situations can be selected or deselected under *Sound*:

| Audible signal | Effect |
|---|---|
| *Acoustic signal for alerts* | Alert messages appearing during operation. These have no direct influence on the refrigerator's cooling function. An on-screen message is also displayed if there is a message. |
| *Acoustic signal for reminders* | Reminder about consumables which need to be replaced. These have no immediate effect on the cooling function. An on-screen message is also displayed if there is a message. |
| *Acoustic signal for confirmations* | Confirmation signal when changing options and functions. |

▶ Press *Sound*.
▶ Switch acoustic signals on or off: Press status button On/Off

### 5.1.7 System reset

Settings can be reset to factory settings in *Reset*.
▶ Press *Reset*.
▷ Settings are reset to factory settings.
▷ The display switches to language setting.
▶ Repeat settings for initial operation. (see 4.7.1)

## 5.2 Timer

A timer can be activated on the status screen.

During the timer cycle time, all settings can be made.

### 5.2.1 Switching on the timer

▶ Press time on the status screen.
▷ Timer settings are displayed.

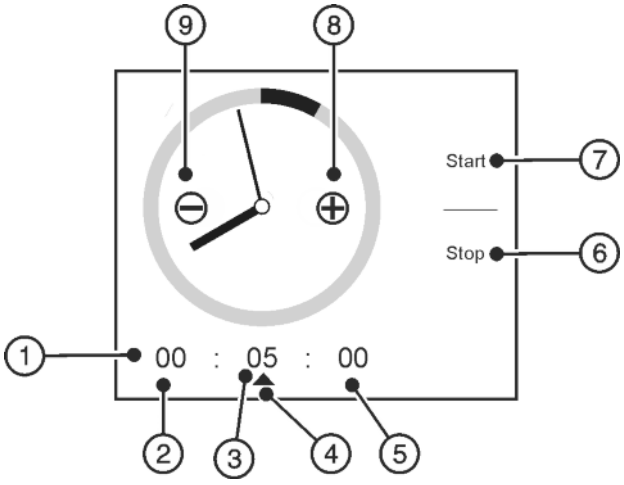


*Fig. 45*
**(1)** Timer cycle time
**(2)** Hours
**(3)** Minutes
**(4)** Selected time unit
**(5)** Seconds
**(6)** Stop
**(7)** Start
**(8)** Plus
**(9)** Minus

▶ Press on hours, minutes or seconds.
▶ Symbol ▲ designates selected time unit.
▶ Increase cycle time: Press plus.
▶ Reduce cycle time: Press minus.
▶ Change other time unit: Press on preferred time unit and change relevant cycle time with plus and minus.
▶ Press *Start*.
▷ Timer cycle time and *Stop* are displayed.

### 5.2.2 Switching Timer off ahead of schedule

▶ Press *Stop*.

### 5.2.3 Timer cycle time has expired

*Timer alarm* message appears on the screen.
▶ Press *OK*.

## 5.3 Programme

The appliance can be operated with 5 preset programmes. Each programme offers individual temperature and function settings for different requirements. Depending on the programme, different settings can be selected and options activated.

Options which can be activated are displayed on the Home screen. A preselection of options is displayed at every programme start. These options can be selected and deselected using the Edit command.

### 5.3.1 Change programme

The selected programme is displayed on the top left of the home screen.
▶ Change programme: Press navigation arrows.

EN

▶ Press *Activate*.

### 5.3.2 *Day-to-Day programme*

The *Day-to-Day programme* is intended as a standard programme for everyday requirements. The set temperatures offer optimum refrigeration for individual temperature areas. Settings can be made individually. Changes in the *Day-to-Day programme* are saved so that they are not lost when changing programme. Time-limited options are not automatically started on programme restart.

Preset temperatures:
- Fridge compartment 5 °C
- Freezer compartment -18 °C

Preselected options:
- *SuperCool*
- *SuperFrost*
- Energy saving tips
- Storage recommendations

Options selectable via Edit:
- *Night mode*
- *SabbathMode*
- *Bottle timer*

### 5.3.3 *EnergySaver programme*

The *EnergySaver programme* is intended for lowering energy consumption. Higher temperatures are preset in all temperature zones as a result of which the appliance has to cool less. Changes to options are discarded after a programme change.

Preset temperatures:
- Fridge compartment 7 °C
- Freezer compartment -16 °C

Preselected options:
- Energy saving tips
- Storage recommendations
- Display settings

The preselection includes all options which can be selected and deselected via the Edit command.

### 5.3.4 *MaxPerformance programme*

The *MaxPerformance programme* is intended for maximum refrigeration. It is specially designed for storing large amounts of food. The lowest temperatures are preset in all temperature areas. Changes to options are discarded after a programme change.

Preset temperatures:
- Fridge compartment 3 °C
- Freezer compartment -26 °C

Preselected options:
- *SuperCool*
- *SuperFrost*

Options selectable via Edit:
- *Bottle timer*

Activated options:
- *SuperCool*
- *SuperFrost*

On expiry of all time-limited options, the programme changes to the *Day-to-Day programme*.

### 5.3.5 *Party programme*

The *Party programme* offer special options and settings for before and during a party. For example, drinks can be cooled more quickly using the *BottleTimer*. The *PartyTimer* option can be used to select the programme cycle time and a connecting programme. The lowest temperatures are preset in all temperature areas. Changes to options are discarded after a programme change.

Preset temperatures:
- Fridge compartment 3 °C
- Freezer compartment -26 °C

Preselected options:
- *Party timer*
- *Bottle timer*
- *SuperCool*
- *SuperFrost*
- Storage recommendations

The preselection includes all options which can be selected and deselected via the Edit command.

Activated options:
- *SuperCool*
- *SuperFrost*

### 5.3.6 *Holiday programme*

The *Holiday programme* is intended for minimum energy consumption during an extended absence. Temperature in the fridge compartment is increased to 15 °C, this way saving energy and preventing bad smells and mould formation. The fridge compartment must be emptied completely during the programme duration. The set freezer temperature remains unchanged.

Preselected options:
- Energy saving tips

The preselection includes all options which can be selected and deselected via the Edit command.

## 5.4 Options

General options not assigned to a specific programme can be set from the menu on the Home screen.

Programme-specific options can be selected in the relevant programme via the Edit command and displayed on the Home screen. A preselection of options is displayed at every programme start.

These options can be selected and deselected using the Edit command depending on the programme. An overview offers (see 5.3)

### 5.4.1 Selecting and deselecting options.

**Note**
Option selection includes a maximum of 6 options.
▶ Select up to 6 options at the same time.

▶ Press Edit.
▷ A list of programme-specific options is displayed.

○ The option is not displayed on the Home screen.

☑ The option is displayed on the Home screen.

▶ Call up more options: Press navigation arrows.
▶ Select or deselect option: Press selection indicator on the right next to the option.
▶ Save selection: Press Home or Back symbol.

*Maximum number reached* message displayed: More than 6 options have been selected.
▶ Press *OK*.
▷ Changes not made.
▷ The display switches to the home screen.
▶ Selecting and deselecting options again. Press Edit.

### 5.4.2 Child proofing

The child-proofing function enables you to make sure that the appliance is not inadvertently switched off by playing children.

**Switching the child lock on and off**

▶ Press menu.
▶ Navigate to the *child lock*: Press navigation arrows.
▶ Press *child lock*.
▶ Press status button On/Off

### 5.4.3 Sabbath Mode

This function meets the religious requirements on the Sabbath or Jewish feast days. When Sabbath mode is on some of the electronic control functions are switched off. After setting Sabbath mode you no longer need to worry about indicator lamps, figures, symbols, displays, alarm messages and fans. The thawing cycle only works for the specified time without taking account of fridge use. After a power cut the appliance automatically switches back to Sabbath mode.

**WARNING**
Danger of food poisoning.
If a power cut occurs when Sabbath mode is enabled, this message is not saved. Once the power is restored the appliance continues to work in Sabbath mode. When this mode is over no message about the power cut is displayed on the temperature display.
If a power cut occurred during Sabbath mode:
▶ Check the food for quality. Do not eat the food if it has thawed.

- All functions are blocked until Sabbath mode is switched off.
- If functions such as SuperFrost, SuperCool, ventilation etc. are selected when Sabbath mode is switched on they remain switched on.
- No audible signals are emitted and the temperature display does not indicate any warnings or settings (such as a temperature alarm or door alarm).
- The internal light is off.

**Switching *SabbathMode* on.**

▶ Press the *SabbathMode* symbol on the Home screen.

**-or-**
▶ Press menu.

▶ Navigate to *SabbathMode*: Press navigation arrows.
▶ Press *Activate*.
▷ The *SabbathMode* symbol is displayed on the screen.

▷ *SabbathMode* switches off automatically after 120 hours if it has not already been switched off manually. The display switches to the home screen.

**Switch off the *SabbathMode***

▶ Press screen.
▶ Press *Stop*.
▷ The display switches to the home screen.

### 5.4.4 Energy saving tips

Practical information on reducing energy consumption can be retrieved in *Energy saving tips*.
▶ Press the *Energy saving tips* symbol on the Home screen.

**-or-**
▶ Press menu.

▶ Never gate to *Energy saving tips*: Press navigation arrows.
▶ Press *Energy saving tips*.
▶ Display more *Energy saving tips*: Press navigation arrows.

### 5.4.5 Storage recommendations

Practical information on storing food in the refrigerator compartment and BioFresh compartment can be called up in *Storage tips*.
▶ Press the *Storage tips* symbol on the Home screen.

**-or-**
▶ Press menu.

▶ Navigate to *Storage tips*: Press navigation arrows.
▶ Press *Storage tips*.
▷ Different food groups are displayed.
▶ Display more food groups: Press navigation arrows.
▶ Processed food group.
▷ Different foods are displayed.
▶ Display more food: Press navigation arrows.
▶ Press food.
▷ Tips on storage, vitamins and minerals are displayed.

### 5.4.6 *Night mode*

Time periods can be set with the *NightMode*, in which no acoustic alerts and reminders are triggered.

Switching on *NightMode*:
▶ Press the *NightMode* symbol on the Home screen.

**-or-**
▶ Press menu.

▶ Navigate to *NightMode*: Press navigation arrows.
▶ Press *NightMode*.
▶ Set start and end time in hours and minutes: Press navigation arrows repeatedly or press and hold.
▶ Press status button On/Off
▷ *NightMode* is switched on, starts and ends daily at the selected time.

Switching off *NightMode*:
▶ Press the *NightMode* symbol on the Home screen.

**-or-**
▶ Press menu.

▶ Navigate to *NightMode*: Press navigation arrows.
▶ Press *NightMode*.
▶ Press status button On/Off

### 5.4.7 *Party timer*

The *Party programme* cycle time and a subsequent programme can be defined, which should be changed when the *PartyTimer* expires, using the *PartyTimer* .

Switch on *PartyTimer* **:**

▶ Press the *PartyTimer* symbol on the Home screen.



▶ Set the programme duration in 4 levels from 6 hours to 24 hours: Press navigation arrows.
▶ Select subsequent programme: Press navigation arrows.
▶ Press status button On/Off
▷ Cycle time is displayed on the Home screen on the symbol.

Switching *PartyTimer* **off ahead of schedule:**

▶ Press the *PartyTimer* symbol on the Home screen.



▶ Press *Stop*.
▷ The display switches to the home screen.

### 5.4.8 SuperCool

With SuperCool you switch to the highest cooling performance to reach lower cooling temperatures. Use SuperCool, to rapidly cool large amounts of food.



The SuperCool function uses slightly more energy.

**Switching on SuperCool**

▶ Press the *SuperCool* symbol on the Home screen.



▶ Set the cycle time in 4 levels from 3 hours to 12 hours: Press navigation arrows.
▶ Press status button On/Off
▷ Temperature drops gradually.
▷ Cycle time is displayed on the Home screen on the symbol.
▷ The *SuperCool* symbol is displayed on the status screen.

After the preset cycle time, the appliance returns to normal mode. Temperature gradually changes to the previously set temperature.

**Switching SuperCool off ahead of schedule**



▶ Press the *SuperCool* symbol on the Home screen.
▶ Press *Stop*.
▶ The display switches to the home screen.
▷ Temperature gradually changes to the previously set temperature.

### 5.4.9 SuperFrost

With this function you can freeze fresh food quickly through to the core. The appliance operates with maximum refrigeration. The noise of the refrigeration unit may be temporarily louder as a result.



The maximum amount of fresh food which can be frozen in 24 h is indicated on the type plate under “freezing capacity ... kg/24h”. This amount varies according to the model and climate rating.

You have to activate SuperFrost in good time, depending on how much fresh food is to be frozen: about 6 hours before placing the food inside in case of small amounts and about 24 hours in advance in case of the maximum amount of food to be frozen.

Wrap produce and spread it out as far as possible. Do not allow produce to be frozen to touch produce that is already frozen to prevent the latter thawing.

You do not have to activate SuperFrost in the following cases:

- when placing frozen food in the freezer
- when freezing up to approx. 2 kg fresh food daily

**Switching SuperFrost on.**

▶ Press the *SuperFrost* symbol on the Home screen.



▶ Press status button On/Off
▷ Temperature drops gradually.
▷ The *SuperFrost* symbol is displayed on the status screen.

If there is a small amount of frozen food:

▶ wait about 6 hours.
▶ Appliance with NoFrost: Put packaged food into the top drawers.
▶ Appliance without NoFrost: Put packaged food into the bottom drawers.

With the maximum amount of frozen food (see model plate):

▶ wait about 24 hours.
▶ Appliance with NoFrost: Remove the top drawers and place the food directly on the top shelves.
▶ Appliance without NoFrost: Remove the bottom drawer and place the food directly in the appliance so that it is in contact with the floor or side walls.
▷ SuperFrost switches off automatically after about 65 hours. Temperature gradually changes to the previously set temperature.
▶ Put the food in the drawers and close them again.

**Switching SuperFrost off ahead of schedule**

▶ Press the *SuperFrost* symbol on the Home screen.



▶ Press status button On/Off
▷ Temperature gradually changes to the previously set temperature.

### 5.4.10 *Bottle timer*

Bottles can be cooled quickly in the freezer compartment with the *BottleTimer*. A message and audible signal prompt you to remove the drinks in time.

**WARNING**
Bottle and can storage time in freezer compartment too long!
Risk of injury from glass fragments.
▶ *BottleTimer alarm* message: Remove bottles and cans immediately.

**Switching on** *BottleTimer*.

▶ Press the *BottleTimer* symbol on the Home screen.



▶ Number of containers in 25 levels from 1 container to 25 containers: Press navigation arrows repeatedly or press and hold.
▶ Set total volume in 13 levels from 0.2 litre to 5 litres: Press navigation arrows repeatedly or press and hold.
▶ Press status button On/Off
▷ *BottleTimer* and *SuperFrost* are on.
▷ Temperature drops gradually.
▷ Cycle time is displayed on the Home screen with the *BottleTimer* symbol.
▷ The *SuperFrost* symbol is displayed on the status screen.

**Remove bottles**

The *BottleTimer alarm* message appears on the screen at the same time as an audible signal

▶ Removed drinks.
▶ Press *OK*.
▷ *BottleTimer* and *SuperFrost* are off.
▷ Display changes to the Home screen and the audible signal stops.

**Switching** *BottleTimer* **off ahead of schedule**

▶ Press the *BottleTimer* symbol on the Home screen.

▶ Press *Stop*.
▷ *BottleTimer* and *SuperFrost* are off.
▷ Display changes to the Home screen and the audible signal stops.

### 5.4.11 Set screen brightness

The brightness of the status screen and the time it remains lit can be set in *Display settings*.

Screen brightness can be set from the Home screen in the *EnergySaver programme*. The setting is made in system settings in other programmes, (see 5.1.5)

Setting screen brightness in the *EnergySaver programme*:
▶ Press the *Display settings* symbol on the Home screen.

▶ Setting option, (see 5.1.5)

## 5.5 Refrigerator compartment

The natural circulation of air in the refrigerator compartment results in zones differing in temperature. It is coldest directly above the plate separating off the BioFresh zone and at the rear wall. It is warmest at the top front of the compartment and in the door.

### 5.5.1 Food refrigeration

**Note**
The energy consumption increases and the cooling performance decreases if the ventilation is inadequate.
▶ Always keep the air slits of the fan free.

▶ Place butter and preserves in the upper area and in the door (see Appliance at a glance).
▶ Use recyclable plastic, metal, aluminium and glass containers and cling film for wrapping.
▶ Always store liquids and food which is subject to odour or taste transfer in closed containers or cover them.
▶ Foods which give off a large amount of ethylene gas and delicate foods, such as fruit, vegetables, salad, should always be stored separately or wrapped so as not to reduce the storage life; e.g. do not store tomatoes together with kiwis or cabbage.
▶ Use the front area of the refrigerator compartment floor only for briefly putting down cooled products, e.g. when rearranging and sorting. However do not leave cooled products there otherwise they may be pushed back or tipped over when the door is closed.
▶ Do not store food too close together to enable good air circulation.

### 5.5.2 Setting the temperature

The temperature depends on the following factors:
- the frequency of opening the door
- the room temperature of the installation location
- the type, temperature and quantity of the food

The temperature can be set from 9 °C to 3 °C.

Recommended temperature setting: 5 °C
▶ Press the Fridge compartment field on the Home screen.
▶ Display other values: Press navigation arrows if required.
▶ Press temperature value.
▷ The appliance is set to the displayed temperature.

### 5.5.3 Shelves

**Moving or removing shelves**

The shelves have stops preventing them from being unintentionally pulled out.

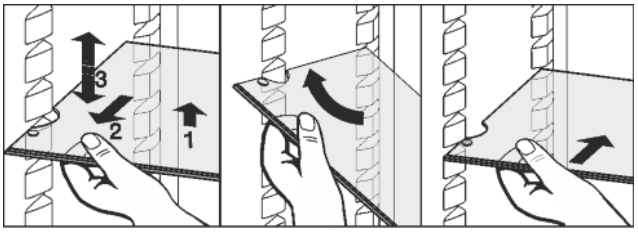


*Fig. 46*
▶ Lift the shelf slightly and pull forward a little.
▶ Adjust the height of the shelf. To do so, push the cut-outs along the supports.
▶ In order to remove the shelf fully, place it at a slant and pull out towards the front.
▶ Re-insert shelves at the required height. The stops must face downwards and lie behind the front shelves.

When storing and removing food on the top shelf, please pay attention to the fold-out interior lighting.

**Dismantling shelves**

▶ The shelves can be dismantled for cleaning.

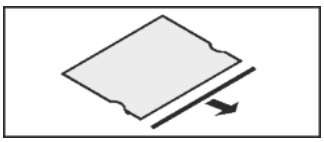

### 5.5.4 Using the sectioned shelf

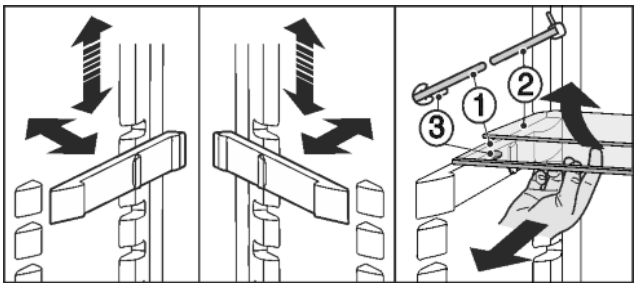


*Fig. 47*
Adjusting the height:
▶ Pull the glass plates out forwards one by one.
▶ Remove the support from the catch mechanism and click into place at the required height.
Using both shelves:
▶ Lift the top glass plate and pull the bottom glass plate forwards.
▷ The glass plate (1) with the pull out stops must be at the front so that the stops (3) point downward.

### 5.5.5 Using adjustable bottle shelf

At the base of the refrigerator compartment, the integrated bottle shelf or alternatively the glass shelf can be used:
▶ Using the bottle shelf: to save space, store the glass shelf under the bottle shelf.
▶ Place the bottles with the base pointing backwards facing the rear wall.
If the bottles project beyond the bottle shelf:
▶ set the lower door rack one position higher.

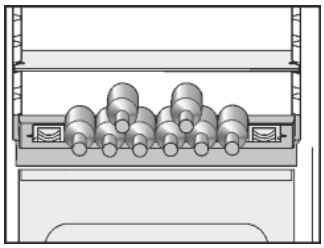

### 5.5.6 Door racks

**Moving the storage rack**

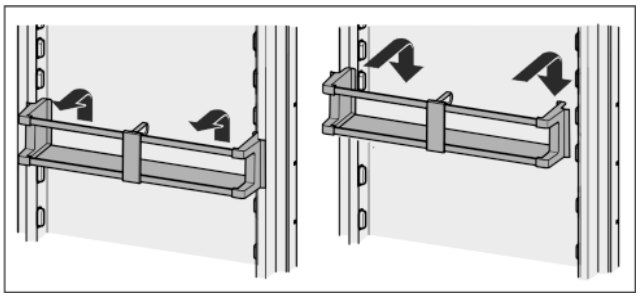

*Fig. 48*

The boxes can be removed and placed on the table as a single unit.

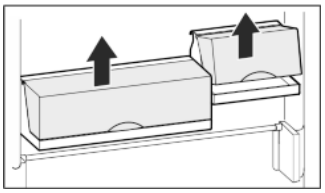

Either one or both the boxes can be used. If particularly tall bottles are to be stored, hang only a single box above the bottle rack.

▶ Re-positioning the boxes: Lift them for removal and re-position them as required.

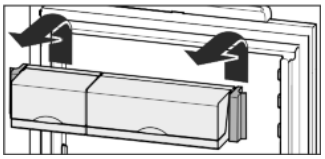

**Note**

Food items in the upper door area that are too tall can lead to contact with the interior lighting.

When closing the door, take care to ensure

▶ that the lid of the package rack is closed, or

▶ that when food is stored on the upper door rack a distance of 30 mm to the appliance ceiling is maintained.

**Dismantling door racks**

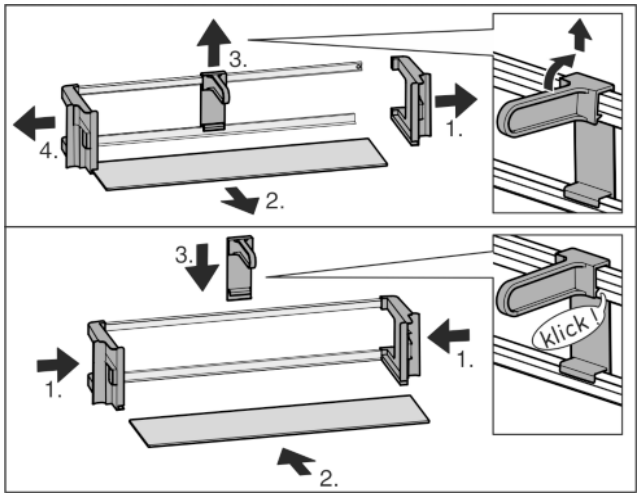


*Fig. 49*

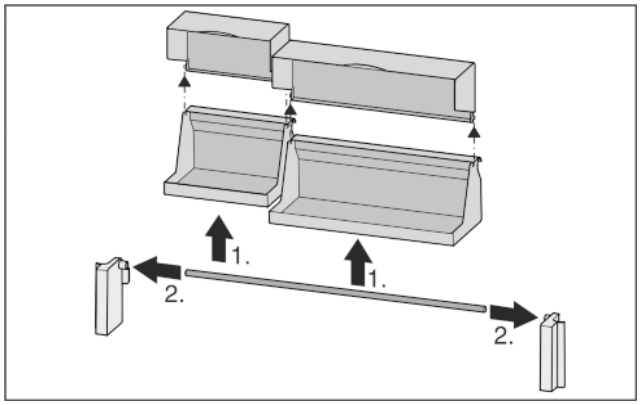


*Fig. 50*

▶ The door racks can be dismantled for cleaning.

### 5.5.7 Using the bottle holder

▶ To avoid the bottles tipping over, push the bottle holder along.

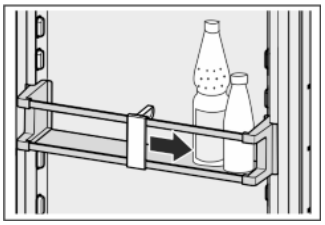

## 5.6 BioFresh compartment

The BioFresh compartment allows some types of fresh food to be stored up to three times longer than in conventional refrigerators, without compromising quality.

For food with an indicated best before date, the date specified on the packaging always applies.

### 5.6.1 DrySafe

The DrySafe is suitable for storing dry or wrapped food (e.g. dairy products, meat, fish, sausages). A relatively dry storage climate is established here.

### 5.6.2 HydroSafe

The HydroSafe at the moist setting is suited for storing unwrapped salad, vegetables and fruit with high inherent moisture. When the drawer is well filled, a dewy climate with up to 90% humidity is established. The humidity in the compartment depends on the moisture content of the food stored and on the opening frequency. You can set the humidity yourself.

### 5.6.3 Setting the humidity in the HydroSafe

▶ Low humidity: Move the slide control to the left.

▶ High humidity: Move the slide control to the right.

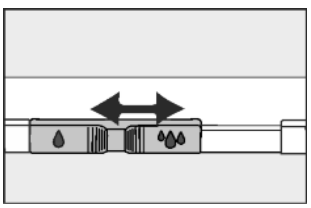

### 5.6.4 Storing food

**Note**

▶ Vegetables sensitive to cold, such as cucumbers, aubergines, semi-ripe tomatoes, zucchinis and all tropical fruits sensitive to cold, do not belong in the BioFresh compartment.

▶ To prevent food spoilage due to transfer of germs: Store unwrapped animal and vegetable products separate from one another in the drawers. This also applies to different sorts of meat.
If food has to be stored together due to lack of space:
▶ wrap the food.

### 5.6.5 Storage times

| Standard values for storage time at low humidity | | | |
|---|---|---|---|
| Butter | up to | 90 | days |
| Hard cheese | up to | 110 | days |
| Milk | up to | 12 | days |
| Sausage, cold meat | up to | 9 | days |
| Poultry | up to | 6 | days |
| Pork | up to | 7 | days |
| Beef | up to | 7 | days |
| Game | up to | 7 | days |

**Note**

▶ Please note that protein-rich food deteriorates faster, i.e. shellfish and crustaceans deteriorate faster than fish, fish faster than meat.

| Standard values for storage time at high humidity | | | |
|---|---|---|---|
| **Vegetables, salad** | | | |
| Artichokes | up to | 14 | days |
| Celery | up to | 28 | days |
| Cauliflower | up to | 21 | days |
| Broccoli | up to | 13 | days |
| Chicory | up to | 27 | days |
| Lamb's lettuce | up to | 19 | days |
| Peas | up to | 14 | days |
| Kale | up to | 14 | days |
| Carrots | up to | 80 | days |
| Garlic | up to | 160 | days |
| Kohlrabi | up to | 55 | days |
| Lettuce | up to | 13 | days |
| Herbs | up to | 13 | days |
| Leek | up to | 29 | days |
| Mushrooms | up to | 7 | days |
| Radishes | up to | 10 | days |
| Brussels sprouts | up to | 20 | days |
| Asparagus | up to | 18 | days |
| Spinach | up to | 13 | days |
| Savoy cabbage | up to | 20 | days |
| **Fruit** | | | |
| Apricots | up to | 13 | days |
| Apples | up to | 80 | days |
| Pears | up to | 55 | days |
| Blackberries | up to | 3 | days |
| Dates | up to | 180 | days |

| Standard values for storage time at high humidity | | | |
|---|---|---|---|
| Strawberries | up to | 7 | days |
| Figs | up to | 7 | days |
| Blueberries | up to | 9 | days |
| Raspberries | up to | 3 | days |
| Currants | up to | 7 | days |
| Sweet cherries | up to | 14 | days |
| Kiwis | up to | 80 | days |
| Peaches | up to | 13 | days |
| Plums | up to | 20 | days |
| Cranberries | up to | 60 | days |
| Rhubarb | up to | 13 | days |
| Gooseberries | up to | 13 | days |
| Grapes | up to | 29 | days |

### 5.6.6 Adjusting the temperature in the BioFresh compartment

The BioFresh temperature is between 0 °C and 3 °C. It is adjusted automatically.

The temperature can be set slightly colder or slightly warmer. It can be set from level 1 (coldest temperature) to level 9 (warmest temperature). The default setting is level 5. With levels 1 - 4 the temperature may drop below 0 °C so that the food can freeze.

▶ Press menu.
▶ Navigate to *Adjusting BioFresh temperature*: Press navigation arrows if required.
▶ Press *Adjusting BioFresh temperature*:
▶ Set BioFresh temperature in 9 levels from level 1 to 9: Press navigation arrows.
▷ The temperature slowly changes to the new value.

### 5.6.7 Drawers with cushioners

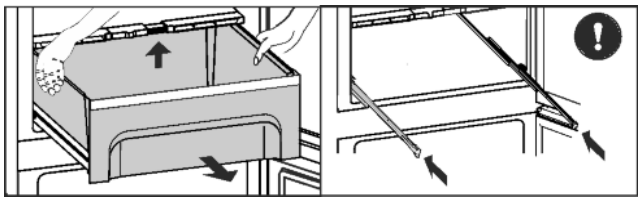

*Fig. 51*

▶ Pull out the drawer, lift it at the back and draw it forwards for removal.
▶ Push the rails in again!

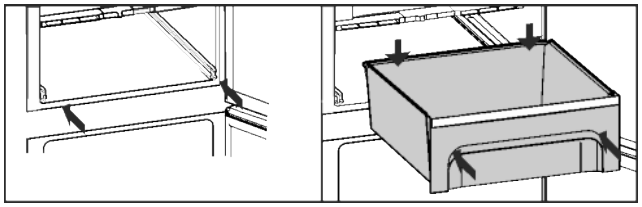

*Fig. 52*

▶ Push the rails in.
▶ Attach the drawer and push it in until it engages audibly at the back.

### 5.6.8 Humidity control plate

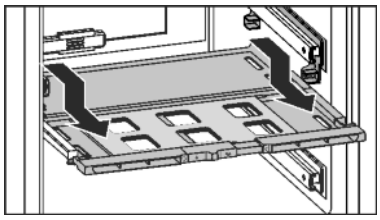

*Fig. 53*

▶ To remove the humidity control plate: Having removed the drawers, carefully draw the plate forwards and lower it for removal.
▶ Inserting the humidity control plate: Insert the plate from below into the front and back bracket and push back until it clicks into place.

## 5.7 Freezer compartment

You can store frozen food, make ice cubes and freeze fresh food in the freezer compartment.

### 5.7.1 Freezing food

The rating plate indicates the maximum quantity of fresh food you can freeze within 24 hours (see Appliance at a glance) under “Freezing capacity ... kg/24h”.

The maximum load of frozen food for the drawers is 25 kg each and for the shelves 35 kg each.

A vacuum is generated after the door is closed. After closing the door, wait for about 1 minute and then it opens more easily.

**CAUTION**
Risk of injury from glass fragments.
Drink bottles and cans may explode if frozen. This applies particularly to carbonated drinks.
▶ Only freeze drink bottles and cans when using the *bottle timer* function.

In order that the food is rapidly frozen through to the core, do not exceed the following quantities per pack:

- Fruit, vegetables up to 1 kg
- Meat up to 2.5 kg

▶ Pack the food in portions in freezer bags, reusable plastic, metal or aluminium containers.

### 5.7.2 Storage life

| Standard values for the storage life of various types of food in the freezer compartment: | |
|---|---|
| Ice-cream | 2 to 6 months |
| Sausage, ham | 2 to 6 months |
| Bread, bakery products | 2 to 6 months |
| Game, pork | 6 to 10 months |
| Fatty fish | 2 to 6 months |
| Lean fish | 6 to 12 months |
| Cheese | 2 to 6 months |
| Poultry, beef | 6 to 12 months |
| Vegetables, fruit | 6 to 12 months |

The values indicated for storage life are standard ones.

### 5.7.3 Thawing food

- in the refrigerator compartment
- in a microwave oven
- in a conventional or fan oven
- at room temperature

▶ Remove only as much food as is required. Use thawed food as quickly as possible.
▶ Food once thawed should be re-frozen only in exceptional cases.

### 5.7.4 Setting the temperature

The temperature depends on the following factors:

- the amount of times the door is opened
- the room temperature of the installation site
- the type, temperature and amount of food

The temperature can be set from -26 °C to -15 °C.

Recommended temperature setting: -18 °C
▶ Press the Freezer compartment field on the Home screen.
▶ Display other values: Press navigation arrows if required.
▶ Press temperature value.
▷ The appliance is set to the displayed temperature.

### 5.7.5 Drawers

**Note**
The energy consumption increases and the cooling performance reduces if the air ventilation is insufficient.
▶ Ensure that the air slits of the fan on the rear wall are always kept free!

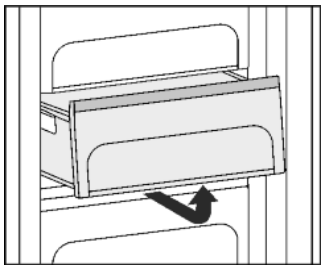

▶ To store frozen food directly on the shelves: pull the drawer forwards and lift it out.

### 5.7.6 Shelves

**Moving shelves**

▶ To remove the shelf: lift up at the front and pull out.
▶ To put the shelf back: simply push in as far as it will go.

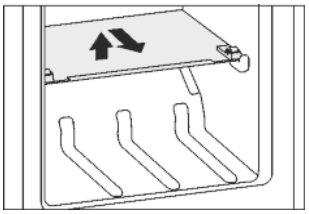

**Removing shelves**

▶ The shelves may be removed for cleaning.

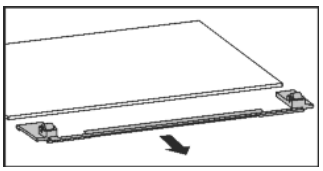

### 5.7.7 VarioSpace

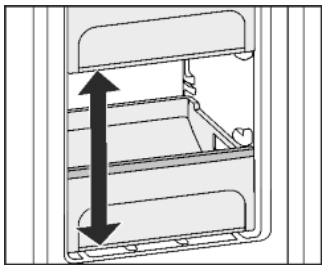

Apart from being able to remove the drawers, you can also remove the shelves, creating space for large items of frozen food. Poultry, meat, large pieces of game and high bakery products can be frozen in one piece and prepared.

▶ The maximum load of frozen food for the drawers is 25 kg each and for the shelves 35 kg each.

### 5.7.8 Cold storage accumulators

The cold storage accumulators prevent the temperature from rising too fast in the event of power failure.

**Using cold storage accumulators**

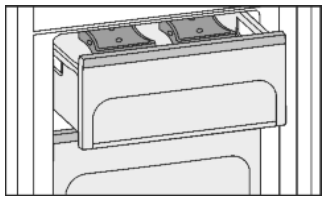

▶ Place the frozen cold storage accumulators on the frozen food in the upper front area of the freezer compartment.

# 6 Maintenance

## 6.1 Change the FreshAir filter.

The FreshAir filter guarantees optimum air quality. It should be changed every 12 months. When the reminder function is set, a message on the display prompts you to change it. The FreshAir filter can be ordered from the specialist dealer.

**Changing the filter**

*Replace the FreshAir filter!* message is displayed.



▶ Remove the fan cover.

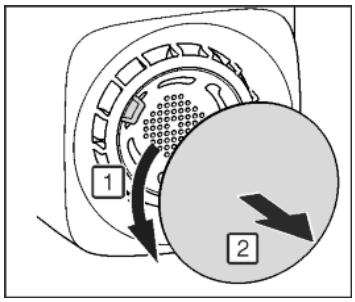


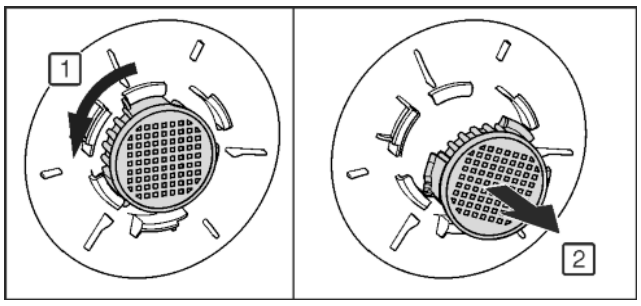


*Fig. 54*

▶ Remove the FreshAir filter.
▶ Insert the new filter in the reverse order.
▶ Ensure that the filter clicks into place.
▶ Replace the fan cover again.
▶ Press *OK*.
▷ *FreshAir filter replaced* message is displayed.
▶ Press *OK*.
▷ The display switches to the home screen.

**Changing the filter later**

If a reminder is needed to change the filter at a later date, the filter change can be put back 30 days.
*Replace the FreshAir filter!* message is displayed.



▶ Press *Remind me later*.
▷ The message will be displayed again in 30 days.
▶ Display message again if required: Press the ⚠ symbol on the Home screen.
▶ Navigate to the message if required: Press *OK*.

**Switching off the reminder function**

If a new FreshAir filter is not inserted, the reminder function can be turned off
▶ Press menu.
▶ Navigate to *System settings*: Press navigation arrows.
▶ Press *System Settings*.
▶ Navigate to *Appliance filter*: Press navigation arrows.
▶ Press *Appliance filter*.
▶ Press *FreshAir filter*.
▶ Press status button On/Off

## 6.2 Defrosting with NoFrost

The NoFrost system automatically defrosts the appliance.

**Refrigerator compartment:**

The defrost water evaporates due to the compressor heat.
▶ Regularly clean the drain opening to allow the water to flow away (see 6.4) .

**Freezer compartment:**

The moisture condenses on the evaporator, is periodically defrosted and evaporates.
▶ The appliance does not have to be manually defrosted.

## 6.3 Cleaning the ventilation grid

The ventilation grid ensures that the appliance works properly due to optimum aeration and ventilation.
▶ Clean the ventilation grid regularly with a vacuum cleaner.
▶ Remove stubborn stains with a soft cloth.

When the reminder function is set, an annual message on the display prompts you to clean it.

**Cleaning the ventilation grid**

The *Clean the ventilation grill!* message is displayed.



▶ Clean ventilation grid.
▶ Press *OK*.
▷ The *Ventilation grill cleaned* message is displayed.
▶ Press *OK*.
▷ The display switches to the home screen.

**Clean the ventilation grid later**

If a reminder is needed to change the ventilation grill at a later date, the filter change can be put back 30 days.
The *Clean the ventilation grill!* message is displayed.



▶ Press *Remind me later*.
▷ The message will be displayed again in 30 days.
▶ Display message again if required: Press the ⚠ symbol on the Home screen.
▶ Navigate to the message if required: Press *OK*.

**Switching off the reminder function**

If a reminder to clean the ventilation grill at a later date is no longer needed, the reminder function can be cancelled.
▶ Press menu.
▶ Navigate to *System settings*: Press navigation arrows.

▶ Press *System Settings*.
▶ Navigate to *Appliance filter*: Press navigation arrows.
▶ Press *Appliance filter*.
▶ Press *ventilation grill*.
▶ Press status button On/Off

## 6.4 Cleaning the appliance

**WARNING**
Risk of injury and damage as a result of hot steam!
Hot steam can lead to burns and can damage the surfaces.
▶ Do not use any steam cleaners!

**NOTICE**
Incorrect cleaning damages the appliance!
▶ Do not use cleaning agents in concentrated form.
▶ Do not use any scouring or abrasive sponges or steel wool.
▶ Do not use any sharp or abrasive cleaning agents, nor any that contain sand, chloride or acid.
▶ Do not use chemical solvents.
▶ Do not damage or remove the type plate on the inside of the appliance. It is important for the customer service.
▶ Do not pull off, bend or damage cables or other components.
▶ Do not allow any cleaning water to enter the drain channel, ventilation grille or electrical parts.
▶ Please use soft cleaning cloths and a universal pH-neutral cleaning agent.
▶ Please use cleaning and care products suitable for contact with foodstuffs in the appliance interior.

▶ **Empty appliance.**
▶ **Pull out the power plug.**



▶ Clean **plastic outer and inner surfaces** with lukewarm water and a little washing-up liquid.

**NOTICE**
Risk of damage from stainless steel care products!
The **stainless steel doors** and **stainless steel side panels** are treated with a premium surface finish.
Stainless steel care products attack these surfaces.




▶ Only use a soft, clean cloth to wipe down **finished door and side panel surfaces** and **painted door and side panel surfaces**. To remove heavy dirt, use a little water or neutral detergent. Alternatively, you can use a micro-fibre cloth.

▶ Most of the **parts** can be dismantled for cleaning: see the relevant chapter.
▶ **Clean drawers** by hand with lukewarm water and a little washing up liquid.
▶ All the **other fittings** can be put in the dishwasher.
▶ Only use a damp cloth to clean the **telescopic rails**. The grease in the runners is for lubrication purposes and must not be removed.

**After cleaning:**
▶ Wipe dry the appliance and items of equipment.
▶ Connect the appliance and switch it on again.
▶ Switch on SuperFrost (see 5.4.9) .
When the temperature is sufficiently cold:
▶ Put the food back inside.

## 6.5 Customer service

First of all check whether you can eliminate the fault yourself (see Malfunction). If you can't, contact Customer Services. You can find the address in the enclosed customer service list.

**WARNING**
Risk of injury if repair work is not carried out professionally!
▶ Have any repairs and action - not expressly specified - on the appliance and mains cable carried out by service personnel only. (see Maintenance)

**Displaying the appliance description (model and index), service no. (service) and serial no. (S. no.) on the screen:**
▶ Press menu.
▶ Navigate to *System settings*: Press navigation arrows.
▶ Press *System Settings*.
▶ Navigate to *appliance information*: Press navigation arrows.
▶ Press *Appliance information*.
▷ The appliance information is displayed.
▶ Note down the appliance information.
▶ Contact customer service and give them the required appliance information.
▶ Follow any further instructions given by Customer Services.

**Alternatively you can read off the appliance information from the model plate:**
▶ Read off the appliance name *Fig. 55 (1)*, service no. *Fig. 55 (2)* and serial no. *Fig. 55 (3)* from the model plate. The model plate can be found on the inside of the appliance on the left.

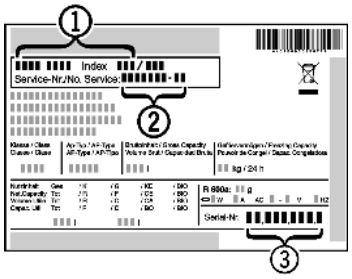


*Fig. 55*

# 7 Malfunctions

Your appliance is designed and manufactured for a long life span and reliable operation. If a malfunction nonetheless occurs during operation, check whether it is due to a handling error. In this case you will have to be charged for the costs incurred, even during the warranty period. You may be able to rectify the following faults yourself:

**Appliance does not work.**
→ The appliance is not switched on.
▶ Switch on the appliance.
→ The power plug is not properly inserted in the wall socket.
▶ Check power plug.
→ The fuse of the wall socket is not in order.
▶ Check fuse.
→ The appliance plug does not fit the appliance properly.
▶ Check the appliance plug.
→ The appliance has not been used for longer than 24 hours. The screen has switched off.
▶ Open the door.

**The compressor runs for a long time.**
→ The compressor switches to a low speed when little cold is needed. Although the running time is increased as a result, energy is saved.
▶ This is normal in energy-saving models.
→ SuperFrost is activated.
▶ The compressor runs for longer in order to rapidly cool the food. This is normal.
→ SuperCool is activated.

▶ The compressor runs for longer in order to rapidly cool the food. This is normal.

**Excessive noise.**
→ Due to the various speed steps, speed-regulated* compressors can generate different running noises.
▶ The sound is normal.

**A bubbling and gurgling noise.**
→ This noise comes from the refrigerant flowing in the refrigeration circuit.
▶ The sound is normal.

**A quiet clicking noise.**
→ The noise is produced whenever the refrigeration unit (motor) automatically switches on or off.
▶ The sound is normal.

**A hum. It is briefly a little louder when the refrigeration unit (the motor) switches on.**
→ The refrigeration increases automatically when the SuperFrost, function is activated, fresh food has just been placed in the appliance or the door has been left open for a while.
▶ The sound is normal.
→ The refrigeration increases automatically when the SuperCool function is activated, fresh food has just been placed in the appliance or the door has been left open for a while.
▶ The sound is normal.
→ The ambient temperature is too high.
▶ Solution: (see 1.2)

**A low hum.**
→ The sound is produced by air flow noise of the fan.
▶ The sound is normal.

**Vibratory noise.**
→ The appliance is not fixed to the ground. The running of the cooling unit therefore makes objects and adjacent furniture vibrate.
▶ Adjust appliance via the height-adjustable feet.
▶ Move bottles and containers apart.

**The *Demo mode active!* message appears on the screen with the time elapsing.**
→ Demo mode is enabled.
▶ Press *Stop*.

**DEMO appears in the bottom right corner of the screen.**
→ Demo mode is enabled.
▶ Unplug the appliance.
▶ Plug the appliance in again.

**The outer surfaces of the appliance are warm*.**
→ The heat of the refrigeration circuit is used to prevent condensate from forming.
▶ This is normal.

**The temperature is not cold enough.**
→ The door of the appliance is not properly closed.
▶ Close the door of the appliance.
→ Insufficient ventilation.
▶ Keep ventilation grille clear, and clean it.
→ The ambient temperature is too high.
▶ Solution: (see 1.2) .
→ The appliance was opened too frequently or for too long.
▶ Wait to see whether the appliance reaches the required temperature by itself. If not, please contact the after sales service (see Maintenance).
→ Too much fresh food was placed inside without SuperFrost.
▶ Solution: (see 5.4.9)
→ The temperature is incorrectly set.
▶ Set the temperature to a colder setting and check after 24 hours.
→ The appliance is too close to a source of heat (stove, heater etc).
▶ Change the position of the appliance or the source of heat.

**The internal light does not come on.**
→ The appliance is not switched on.
▶ Switch on the appliance.
→ The door was open longer than 15 min.
▶ The interior light automatically switches off if the door has been open for about 15 min.
→ The appliance has not been used for longer than 24 hours. The screen and LEDs have switched off.
▶ Open the door and wait a moment.
→ The LED illumination is defective or the cover is damaged:

**WARNING**
Risk of injury due to electric shock!
Live parts are located under the cover.
▶ Have the LED interior light changed or repaired only by the customer service or by specialized personnel trained for the purpose.

**WARNING**
Danger of injury by LED lamp!
The light intensity of the LED illumination corresponds to laser class 1/1M.
If the cover is defective:
▶ Do not look into the illumination with optical lenses from the immediate proximity. This can cause injury to the eyes.

**The door seal is defective or needs to be replaced for another reason.**
→ The door seal can be replaced. It can be replaced without the need for special tools.
▶ Contact Customer Service (see Maintenance):

**The unit has iced up or condensation has formed.**
→ The door seal may have also slipped out of its groove.
▶ Check to ensure that the door seal is seated properly in the groove.

# 8 Messages

Error messages and reminders are displayed by an audible signal and a message on the screen. The audible signal gets louder and louder when error messages appear. It only stops when the message is confirmed. Highest priority messages are displayed first if several occur at the same time. Each message must be cleared separately.

The message stays on the Home screen as long as it is active or the fault is not eliminated.

**Note**
Details on the message can be displayed again on the Home screen.
▶ Press messages symbol ⚠.

For several active messages, the navigation bar states the number and the current position in the messages.

To display the next message, press *OK*.

After the last active message the display switches to the home screen.

**Door alarm**



An audible warning sounds if the door is open for longer than 60 seconds. The *Door alarm* appears on the display. The audible warning stops automatically when the door is closed.

The audible warning can be switched off when the door is open. The audible alarm is switched off while the door is open.

▶ Press *OK*.
▷ The audible signal stops.
▷ The display switches to the home screen.

**Temperature alarm**



An audible signal sounds if the temperature in the freezer compartment is not cold enough. The *Temperature alarm* message appears on the display.

The temperature had risen too high during the last few hours or days. When the fault is eliminated the appliance continues to work at the last temperature setting.

The reason for too high a temperature may be:

- hot, fresh food was inserted
- too much warm room air flowed in when rearranging and removing food
- the power was cut off for a while
- the appliance is faulty

▶ Press *OK*.
▷ The audible signal stops.
▷ The display switches to the home screen.
▷ The temperature alarm symbol is displayed in the relevant temperature field.
▶ Check the food for quality. Do not consume spoiled food. Do not re-freeze defrosted food,
▷ The symbol is greyed out when the target temperature is reached.

If the alarm status persists or the temperature cannot be reset independently: (see Malfunction).

**Power cut**



An audible warning sounds. The *Power failure alarm* message appears on the display. The warmest temperature reached in the freezer compartment during the power cut is displayed on the screen.

The temperature had risen too high over the last few hours or days due to a power cut or power interruption.

When the power has been restored, the appliance continues to work in the last temperature setting in the *Day-to-Day programme*. Activated reminders for changing the FreshAir filter and cleaning the ventilation grid are retained. If the *Holiday programme* was active before the power failure, the appliance continues in the *Holiday programme*.

▶ Press *OK*.
▷ The audible signal stops.
▷ The display switches to the home screen.
▷ The temperature alarm symbol is displayed in the relevant temperature field.
▶ Check the food for quality. Do not consume spoiled food. Do not re-freeze defrosted food,
▷ The symbol is greyed out when the target temperature is reached.

**Appliance faults**



An audible warning sounds. The *Fault* message appears on the display with the relevant error code.

An appliance component indicates a fault.

▶ Note down the fault code.
▶ Press *OK*.
▷ The audible signal stops.
▷ The display switches to the home screen.
▶ Contact Customer Services (see Maintenance).

If the fault related to a specific temperature zone, the appliance fault symbol is displayed instead of the temperature in the zone's temperature field.

**Other messages**



*Replace FreshAir filter!* (see Maintenance)



*Clean the ventilation grille!* (see Maintenance)



*BottleTimer alarm* (see Control)



*Timer alarm* (see Control)

# 9 Decommissioning

## 9.1 Switching the appliance off

**Note**
If the appliance or the freezer or fridge compartment cannot be switched off the child safety device has been switched on.
▶ Switch the child safety device off (see 5.4.2) .

### 9.1.1 Switching the whole appliance off via the menu

The whole appliance is switched off. The screen goes black.
▶ Press menu.
▶ Navigate to *Switching off the appliance*: Press navigation arrows.
▶ Press *Switch off the appliance*.
▶ Press *Switch off?*.
▶ Press *Switch off?*.
▷ The standby symbol flashes on the whole screen.
▷ After 1 minute the standby symbol goes out.

### 9.1.2 Switching the whole appliance off via the freezer compartment

The fridge and BioFresh compartments are automatically turned off when the freezer compartment is turned off. The screen remains on, so the time can still be used, for example.
▶ Press freezer compartment field.
▶ Press standby symbol.
▷ *Switch off zone?* is displayed.
▶ Press *OK*.

Press *Cancel* if freezer compartment should not be switched off.

### 9.1.3 Switching off the fridge and BioFresh compartments

If necessary, the fridge and BioFresh compartments can be switched off separately.
▶ Press fridge compartment field.
▶ Press standby symbol.
▷ *Switch off zone?* is displayed.
▶ Press *OK*.

Press *Cancel* if the fridge and BioFresh compartment should not be switched off.

## 9.2 Taking the appliance out of service

▶ Empty the appliance.

- ▶ Remove mains connector.
- ▶ Remove appliance connector if required: Remove and move from left to right at the same time.
- ▶ Clean the appliance (see 6.4) .
- ▶ Leave the door open to prevent odour.



EN

# 10 Disposing of the appliance



The appliance contains some reusable materials and should be disposed of properly - not simply with unsorted household refuse. Appliances which are no longer needed must be disposed of in a professional and appropriate way, in accordance with the current local regulations and laws.

When disposing of the appliance, ensure that the refrigeration circuit is not damaged to prevent uncontrolled escape of the refrigerant it contains (data on type plate) and oil.

- ▶ Disable the appliance.
- ▶ Pull out the plug.
- ▶ Cut through the connecting cable.

**Liebherr-Hausgeräte Ochsenhausen GmbH**
Memminger Straße 77-79
88416 Ochsenhausen
Deutschland

home.liebherr.com