PHILIPS

4404.017.00841
Last update: 06/01/16

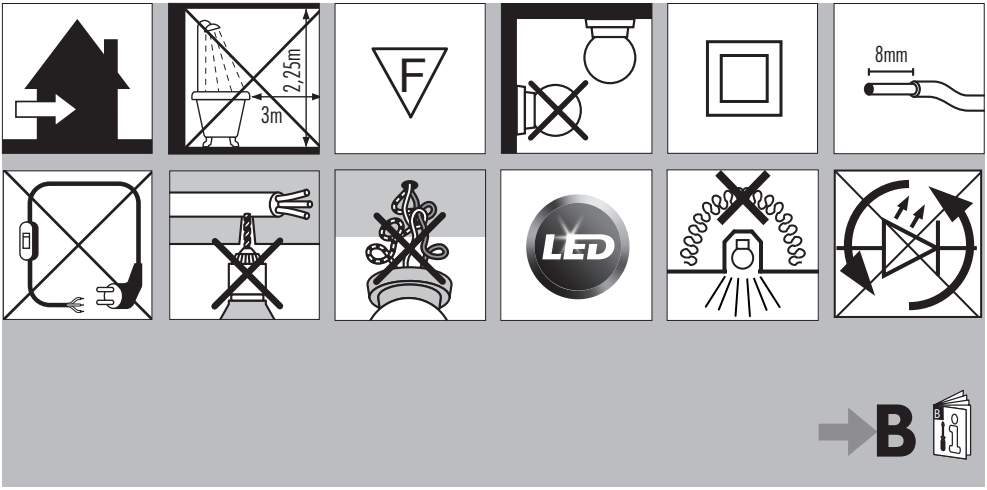

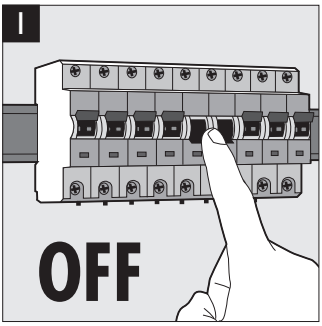

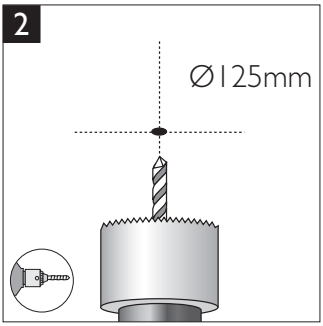

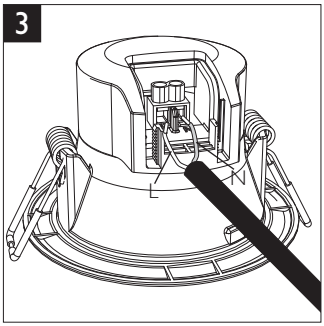

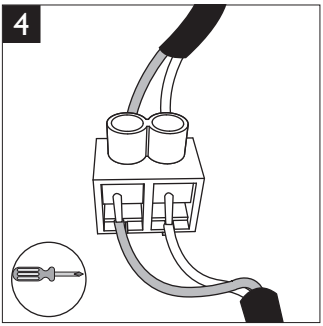

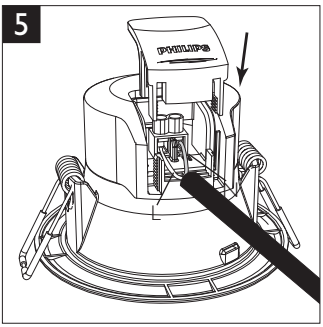

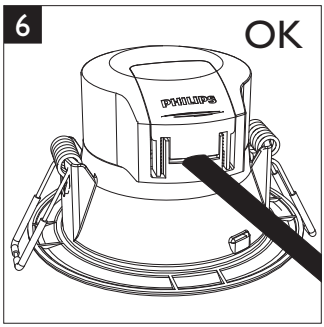

© Copyright

PHILIPS

7

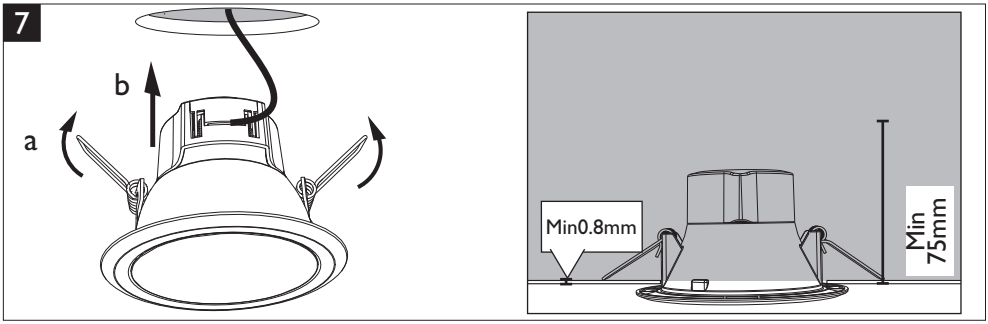

PHILIPS LIGHTING (CHINA) INVESTMENT CO., LTD.
BUILDING NO. 9, LANE 888, TIANLIN ROAD,
MINHANG DISTRICT, SHANGHAI, CHINA, 200233
飞利浦照明（中国）投资有限公司
中国上海市闵行区田林路888弄9号楼，邮编：200233