

ICY BOX®
www.icybox.de

ICY BOX IB-MS601-W
Full metall wall mount for a screen sizes of 22" (56 cm) to 42" (107 cm)

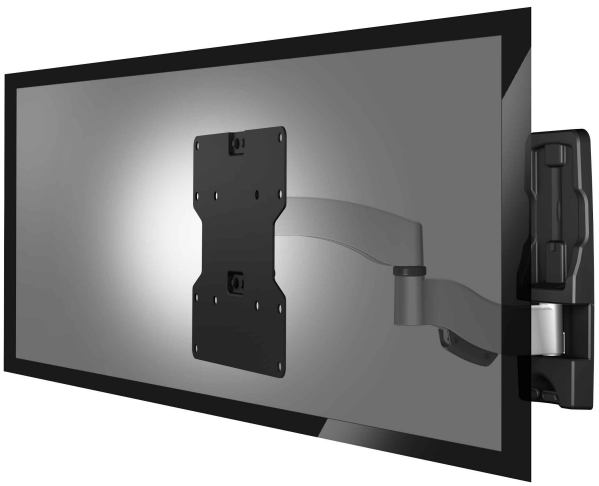



Key features

- The IB-MS601-W is a flexible full metal wall mount
- Easy Cable™ Management cover & column to make the cables tidy & well arranged
- Smart Torque Adjust™ is available at every Hinge Module to meet various weights implemented
- Horizontally adjustable VESA support for a wide range of screen dimensions
- For screens size up to 42" (107 cm) diagonal screen measurement
- Special metal wall mount design to guarantee stability
- Ultra Slim - with a walldistance of 35 mm very discreet but still very flexible
- Supports 200x200, 200x100 and 100x100 VESA standards

Technical data

Model	IB-MS601-W
Article No.	60038
EAN / GTIN code	4250078163794
Brand	ICY BOX
Article text	Full metall wall mount for screen size 22" (56 cm) to 42" (107 cm)
Colour	Silver
Material	Steel / Plastic / Aluminum Alloy
Maximum size of monitor	42" (107 cm)
Number of monitors	1
Max. weight of monitor	25 kg
VESA - Swivel (Hinge)	+/- 90° vertical
VESA - Tilt (Hinge)	+0°/-12° horizontal
VESA - Rotate (Pivot)	35 mm
Base - Rotate (Pivot)	370 mm
Mounting	Full metal wall holder

RaidSonic Technology GmbH • Kurt-Fischer-Straße 50 • 22926 Ahrensburg / Germany
Telefon: +49-(0)4102 – 468 900 (Vertrieb) • Fax: +49-(0)4102 – 468 901 • www.raidsonic.de
Offers and deliveries are only done under our General Terms and Conditions. Errors and omissions excepted.

RaidSonic
STORAGE SOLUTIONS WITHOUT LIMITS



Measur**es and rotatibility**

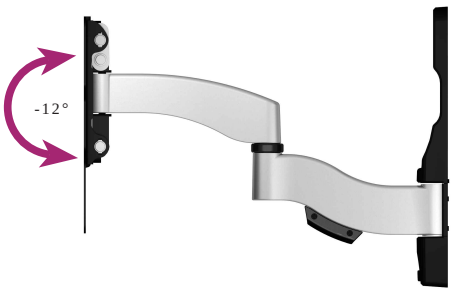

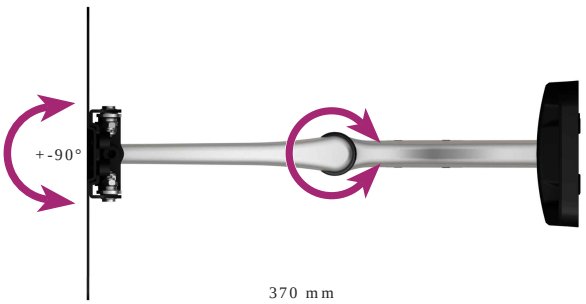



Cable management



Torque adjustment

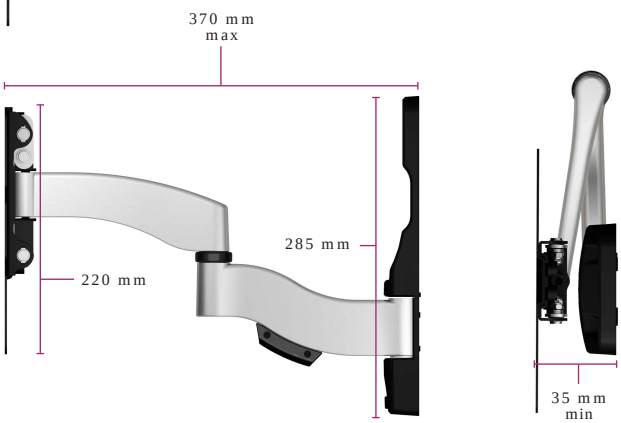

Packing content: IB-MS601-W, allen wrench, set of screws, QIG

Logistical data

Packing unit:	3 pcs./carton	Dimension/carton:	591x448x377 mm	Import tax:	73269098
Total weight:	16.4 kg/carton	Dimension of packing box:	350x580x150 mm		
Gross weight (incl. packing):	5.04 kg	Dimension of article:	327x1067x504 mm		
Net weight:	3.38 kg	Country of origin:	Taiwan		

RaidSonic Technology GmbH • Kurt-Fischer-Straße 50 • 22926 Ahrensburg / Germany
Telefon: +49-(0)4102 – 468 900 (Vertrieb) • Fax: +49-(0)4102 – 468 901 • www.raidsonic.de
Offers and deliveries are only done under our General Terms and Conditions. Errors and omissions excepted.

RaidSonic
STORAGE SOLUTIONS WITHOUT LIMITS