

ICY BOX IB-MS603-T
Full metall holder for a screen size up to 24" with a desk mounted base



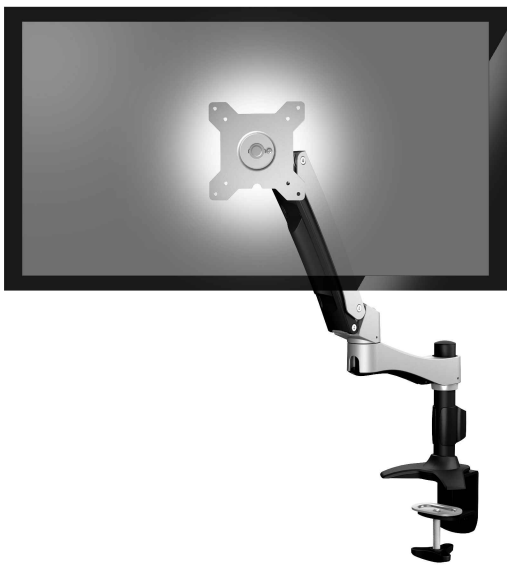

Key features

- The IB-MS603-T remains the classic multiple stand design and makes it more slim and ergonomic
- Easy Cable™ Management cover & column to make the cables tidy & well arranged
- Smart Torque Adjust™ is always available at every Hinge Module to meet various weights implemented.
- Free adjustable VESA support for a wide range of screen dimensions and Touchscreen support
- For screens size up to 24" diagonal screen measurement
- Special metal foot design to guarantee stability
- Simple monitor height setup
- Supports 100x100 and 75x75 VESA standards

Technical data

Model	IB-MS603-T
Article No.	60040
EAN / GTIN code	4250078163817
Brand	ICY BOX
Article text	Full metall holder for a screen size up to 24" with a desk mounted base
Colour	Silver
Material	Steel / Plastic / Aluminum Alloy
Maximum size of monitor	24"
Number of monitors	1
Max. weight of monitor	2~10 kg
VESA - Swivel (Hinge)	+/- 90° horizontal
VESA - Tilt (Hinge)	+90° / -20° vertical
Arm - Tilt	+65° / -30° vertical
VESA - Rotate (Pivot)	360° horizontal
Base - Rotate (Pivot)	360° vertical
Mounting	Full metall clamp-base

RaidSonic Technology GmbH • Kurt-Fischer-Straße 50 • 22926 Ahrensburg / Germany
Telefon: +49-(0)4102 – 468 900 (Vertrieb) • Fax: +49-(0)4102 – 468 901 • www.raidsonic.de
Offers and deliveries are only done under our General Terms and Conditions. Errors and omissions excepted.

RaidSonic
STORAGE SOLUTIONS WITHOUT LIMITS



Measures and rotatibility



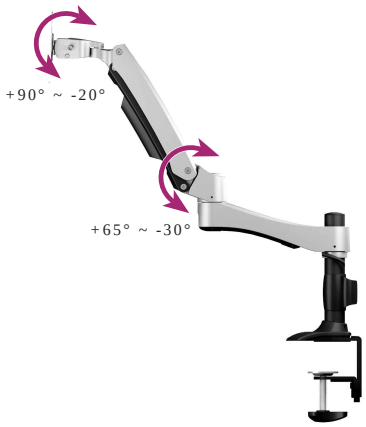

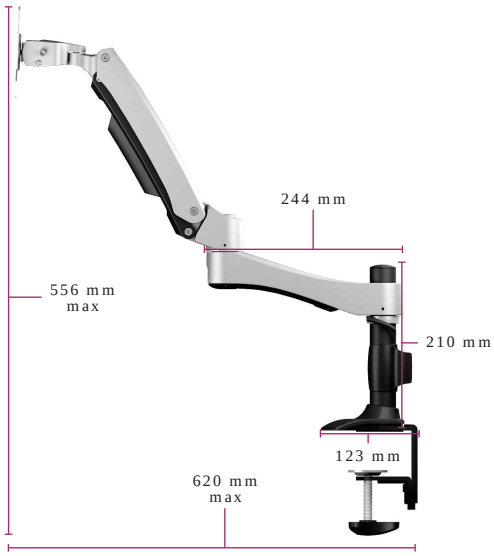



Cable management

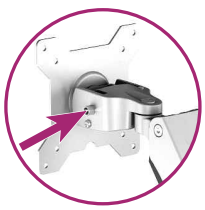

Torque adjustment

Packing content: IB-MS603-T, allen wrench, set of screws, QIG

Logistical data

Packing unit:	4 pcs./carton	Dimension/carton:	619x452x316 mm	Import tax:	76169990
Total weight:	16.6 kg/carton	Dimension of packing box:	220x600x145 mm		
Gross weight (incl. packing):	3.78 kg	Dimension of article:	123x620x556 mm		
Net weight:	3.00 kg	Country of origin:	Taiwan		

RaidSonic Technology GmbH • Kurt-Fischer-Straße 50 • 22926 Ahrensburg / Germany
Telefon: +49-(0)4102 – 468 900 (Vertrieb) • Fax: +49-(0)4102 – 468 901 • www.raidsonic.de
Offers and deliveries are only done under our General Terms and Conditions. Errors and omissions excepted.

RaidSonic
STORAGE SOLUTIONS WITHOUT LIMITS