Best Connectivity

LogiLink®
www.LogiLink.de



Art No. WL0145A

Wireless N 150Mbps USB Adapter

The WL0145A is a highly integrated MAC/BBP and 2.4GHz RF/PA/LNA single chip with 150Mbps PHY rate supporting. It fully complies with IEEE802.11n and IEEE802.11b/g feature rich wireless connectivity at high standards, delivers reliable, cost-effective, throughput form an extended distance. The WL0145A is designed to support standard based features in the areas of security, quality of service and international regulation, giving end users the greatest performance anytime in any circumstance.

Feature:

- Chipset: Realtek RTL8188EUS
- With 2dBi detachable antenna
- Complies with IEEE802.11b/g/n standards
- Supports 64/128-bit WEP, WPA, WPA2, WPA-PSK and WPA2-PSK Encryption
- High transfer data rate – up to 150Mbps
- Supports WiFi Protection Setup (WPS)
- Supports USB 2.0/1.1 interface
- Supports Windows 2000/XP/Vista/7/8/10, Linux 2.6.x and MAC OS





Software and System Information

Linux 2.4/2.6	ARM, MIPSII
Windows 2000/XP/Vista/7/8/10	X86 Platform
Mac OS X 10.3/10.4/10.5/10.6	N/A

* The specifications and pictures are subject to change without notice.
*All trade names referenced are the registered namework of their respective owners.

RoHS compliant CE

WL0145A
4 052792 038323
Made in China

Best Connectivity

LogiLink®
www.LogiLink.de



Art No. WL0145A

Wireless N 150Mbps USB Adapter

Specification:

Hardware	
Main Chipset	Realtek RTL8188EUS
Host interface	USB 2.0/1.1 Type A
LED	Link/Activity
RF Performance	
Standards	IEEE802.11b/g & 802.11n (1T1R mode, 150Mbps)
Antenna	2dBi detachable antenna
Operation Frequency	2412~2483.5 MHz (varies according to different regions).
Typical Tx Power (E.R.I.P)	802.11b (CCK)11Mbps: 19±1dBm; 802.11g (OFDM) 54Mbps: 16±1dBm 802.11n (HT20@MCS7), 15±1dBm; 802.11n (HT40@MCS7), 15±1dBm
Receive Sensitivity	802.11b: -86±1dBm; 802.11g: -74±1dBm 802.11n (HT20), -70±1dBm; 802.11n (HT40), -70±1dBm
Software Support	
Operation System	Windows 2000/XP/Vista/7/8/10; Linux 2.6.X; Mac OS X
Security	WEP 64/128bit, WPA, WPA2, 802.1x, and 802.11i, Cisco CCS Compliant
Operation conditions	
Voltage Range/ Current	DC 5.0V ± 5% <160mA
Temperature	Operation: -10°C ~ 60°C Storage:-20°C ~ 70°C
Humidity (Non-Condensing)	Operation: RH 95% Storage: RH 95%
Physical Specification	
Dimensions	16,4 x 14,7 x 58mm (Main body)
Net Weight	9,8g

* The specifications and pictures are subject to change without notice.
*All trade names referenced are the registered namework of their respective owners.

RoHS compliant CE

WL0145A
4 052792 038323
Made in China

Best Connectivity

LogiLink®
www.LogiLink.de



Art No. WL0145A

Wireless N 150Mbps USB Adapter

System Block Diagram:

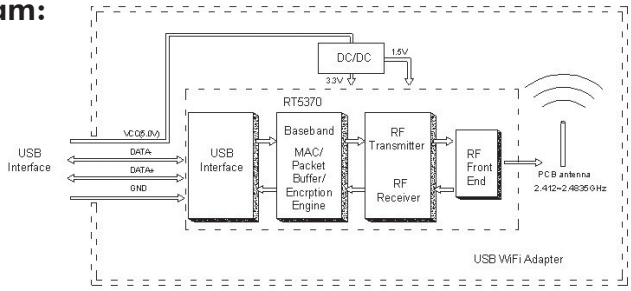

Physical Characteristics:

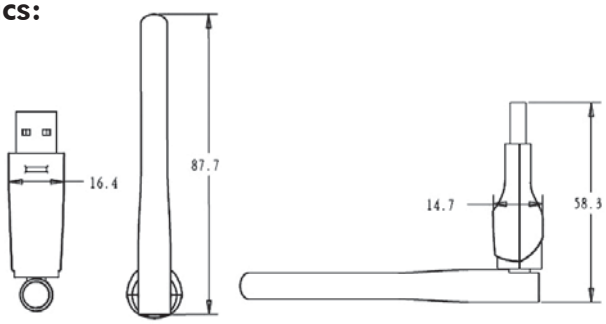

Package Contents:

- 1 x Wireless N USB Adapter
- 1 x Quick Installation Guide
- 1 x CD (Driver + Utility + Manual)

Packaging Information:

- Packing Dimension: 100 x 165 x 26mm
- Packing Weight: 0,05kg
- Carton Dimension: 438 x 335 x 375mm
- Carton Q'ty: 200pcs
- Carton Weight: 11,5kg

* The specifications and pictures are subject to change without notice.
*All trade names referenced are the registered namework of their respective owners.

RoHS compliant CE

WL0145A
4 052792 038323
Made in China