AKP 785 IX

12NC: 857778501500

GTIN (EAN) code: 8003437937934



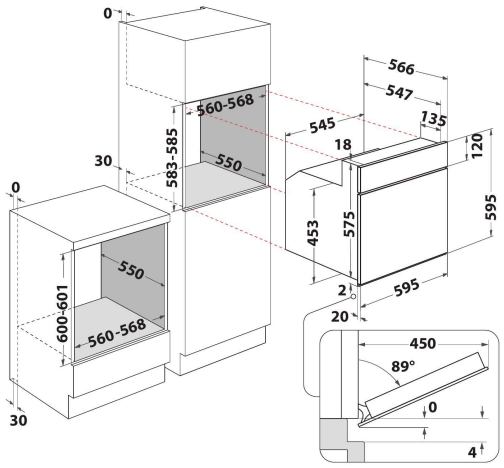

- SmartClean
- Energy class A
- Cavity 65 L
- Defrost function
- Forced Air Fan Cooking
- Turbo Fan
- Grill
- Easy Clean Enamel Interior
- Turbo grill function
- Pastry function
- Conventional Cooking
- "Push Push" knobs
- Door Glasses Number: 2
- Protuding handle
- Timer
- Grill 2500 W
- 1 Grid

Whirlpool built in electric oven: inox color, self cleaning - AKP 785 IX

This Whirlpool built in Oven features: smart Clean technology, that provides a self cleaning cycle that ensures ideal cleaning results, at the touch of a button. Advanced electric technology allowing you to cook dishes saving energy. Halogen lamp allowing a more energy-efficient performance.

Multifunction 8
Multiple cooking methods. The Multifunction 8 feature offers flexible cooking options, to ensure perfect results, whatever the recipe.

Smart clean
Effortless, eco-friendly cleaning. The innovative SmartClean technology cleans your oven thoroughly and efficiently in just 30 minutes, without the use of detergents. Simply add 200cc of water to the oven cavity, run the SmartClean cycle, then wipe with a dry cloth.

Urban aesthetic
The Urban collection. Admire the beauty of performance. With a futuristic design and unparalleled performance, the Urban collection is designed for modern, high-tech kitchens. Equipped with innovative 6TH SENSE technology, Urban ovens can be set in three simple steps for perfect results. Maximum flexibility and ease of use with a distinctive look and original finishes.

Push push
The knobs' 'push push' design ensure extra comfortable ease of use and a premium look.

Standard cavity
This Whirlpool Oven features a standard-size cavity.

Energy class
Outstanding energy savings. Ovens with an A/ A+ energy rating offer an excellent level of energy efficiency, ensuring lower consumption and saving you money on your energy bills.

Energy class A
Energy efficient. With its A energy rating, this Whirlpool appliance will allow you to enjoy both ideal performance and excellent energy consumption.

AKP 785 IX

12NC: 857778501500

GTIN (EAN) code: 8003437937934

Whirlpool
SENSING THE DIFFERENCE

MAIN FEATURES

Product group	Oven
Commercial code	AKP 785 IX
Main colour of product	Inox
Construction type	Built-in
Type of control	Mechanical and electronic
Type of control settings	-
Are any hobs controls integrated?	No
Which kind of hobs can be controlled?	-
Automatic programmes	No
Current (A)	16
Voltage (V)	220-240
Frequency (Hz)	50/60
Length of Electrical Supply Cord (cm)	120
Plug type	No
Depth with open door 90 degree (mm)	-
Height of the product	595
Width of the product	595
Depth of the product	564
Minimum niche height	0
Minimum niche width	0
Niche depth	0
Net weight (kg)	33
Usable volume (of cavity)	60
Integrated Cleaning system	Hydrolytic
Grids of the cavity	1
Trays	2

TECHNICAL FEATURES

Timer	-
Time control	Electronic
Time-setting options	Start and Stop
Safety device	-
Interior light	Yes
Number of interior lights of the cavity	1
Position of interior lights of the cavity	Rear
Oven guides of the cavity	Telescopic
Probe of the cavity	No

PERFORMANCES

Energy input	Electric
Type of energy of the cavity	Electricity
Energy efficiency class - NEW (2010/30/EU)	A
Energy consumption per cycle conventional - NEW (2010/30/EU)	0.87
Energy consumption per cycle forced air convection - NEW (2010/30/EU)	0.78

