DAILY REFERENCE
GUIDE

THANK YOU FOR BUYING A WHIRLPOOL PRODUCT.
In order to receive a more complete assistance, please register your appliance on: **www.whirlpool.eu/register**

You can download the Safety Instructions and the Use and Care Guide, by visiting our website **docs.whirlpool.eu** and following the Instructions on the back of this booklet.

Before using the appliance carefully read Health and Safety guide.

PRODUCT DESCRIPTION

APPLIANCE

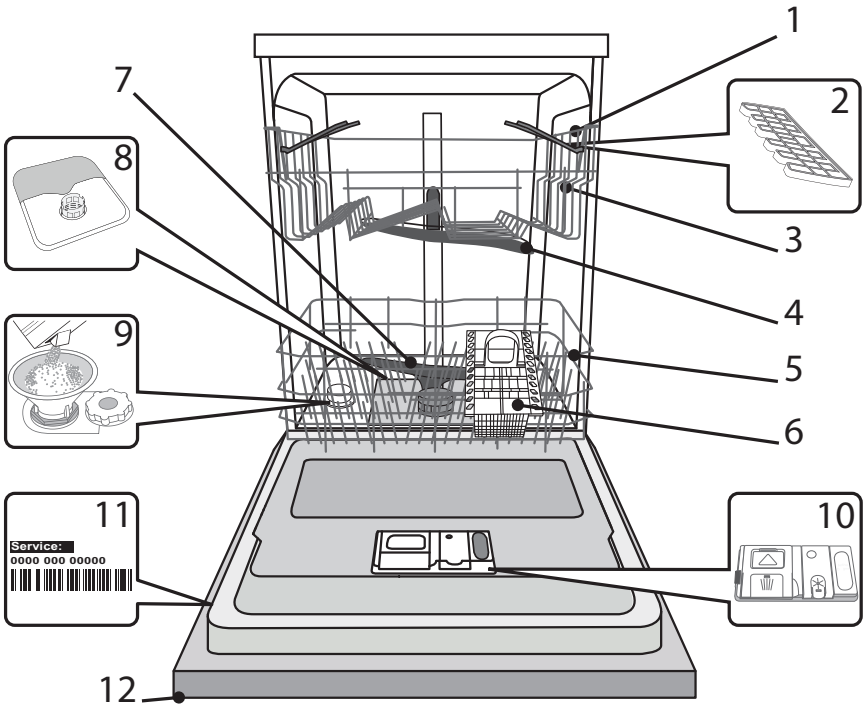

1. Upper rack
2. Foldable flaps
3. Upper rack height adjuster
4. Upper spray arm
5. Lower rack
6. Cutlery basket
7. Lower spray arm
8. Filter Assembly
9. Salt reservoir
10. Detergent and Rinse Aid dispensers
11. Rating plate
12. Control panel

CONTROL PANEL

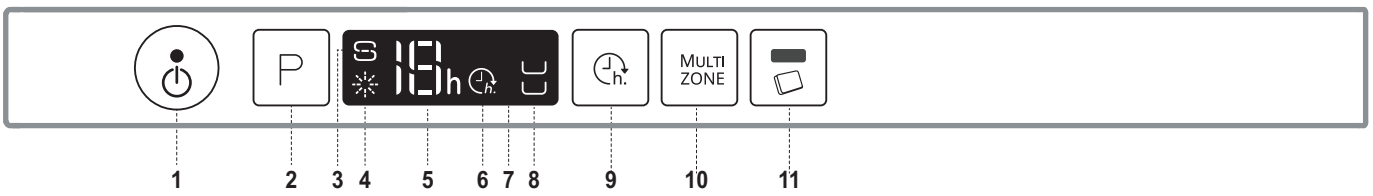

1. On-Off/Reset button with indicator light
2. Program selection button
3. Salt refill indicator light
4. Rinse Aid refill indicator light
5. Program number and delay time indicator
6. Delay indicator light
7. Display
8. Multizone indicator light
9. Delay button
10. Multizone button
11. Tablet (Tab) button with indicator light

FIRST TIME USE
SALT, RINSE AID AND DETERGENT

ADVICE REGARDING THE FIRST TIME USE

After installation, remove the stoppers from the racks and the retaining elastic elements from the upper rack.

FILLING THE SALT RESERVOIR

The use of salt prevents the formation of LIMESCALE on the dishes and on the machine's functional components.

- It is important that the salt reservoir be never empty.
- It is important to set the water hardness.

The salt reservoir is located in the lower part of the dishwasher *(see PROGRAMS DESCRIPTION)* and should be filled when the **SALT REFILL indicator light** in the control panel is lit.

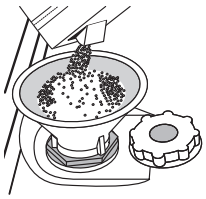

1.Remove the lower rack and unscrew the reservoir cap (anticlockwise).

2.Only the first time you do this: fill the salt reservoir with water.

3.Position the funnel *(see figure)* and fill the salt reservoir right up to its edge (approximately 1 kg); it is not unusual for a little water to leak out.

4. Remove the funnel and wipe any salt residue away from the opening.

Make sure the cap is screwed on tightly, so that no detergent can get into the container during the wash program (this could damage the water softener beyond repair).

Whenever you need to add salt, it is mandatory to complete the procedure before the beginning of the washing cycle.

SETTING THE WATER HARDNESS

To allow the water softener to work in a perfect way, it is essential that the water hardness setting is based on the actual water hardness in your house. This information can be obtained from your local water supplier.

The factory setting is for average (3) water hardness.

- Switch on the appliance by pressing the **ON/OFF** button.
- Switch off the appliance by pressing the **ON/OFF** button.
- Hold down button **P** for 5 seconds, until you hear a beep.
- Switch on the appliance by pressing the **ON/OFF** button.
- The current selection level number and the salt indicator light both flash.
- Press button **P** to select the desired hardness level (*see WATER HARDNESS TABLE)*.

Water Hardness Table			
Level		**°dH** German degrees	**°fH** French degrees
1	Soft	0 - 6	0 - 10
2	Medium	7 - 11	11 - 20
3	Average	12 - 17	21 - 30
4	Hard	18 - 34	31 - 60
5	Very hard	35 - 50	61 - 90

- Switch off the appliance by pressing the **ON/OFF** button.

Setting is complete!

As soon as this procedure is complete, run a program without loading.

Only use salt that has been specifically designed for dishwashers.

After the salt has been poured into the machine, the SALT REFILL indicator light switches off.

If the salt container is not filled, the water softener and the heating element may be damaged as a result.

FILLING THE RINSE AID DISPENSER

Rinse aid makes dish DRYING easier. The rinse aid dispenser **A** should be filled when the **RINSE AID REFILL indicator light** in the control panel is lit.

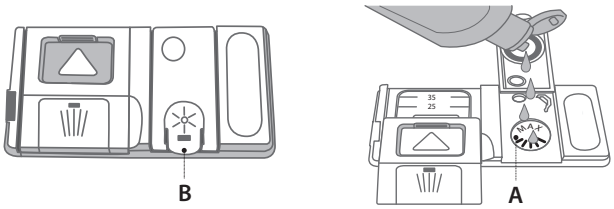

1. Open the dispenser **B** by pressing and pulling up the tab on the lid.
2. Carefully introduce the rinse aid as far as the maximum (110 ml) reference notch of the filling space - avoid spilling it. If this happens, clean the spill immediately with a dry cloth.
3. Press the lid down until you hear a click to close it.

NEVER pour the rinse aid directly into the tub.

ADJUSTING THE DOSAGE OF RINSE AID

If you are not completely satisfied with the drying results, you can adjust the quantity of rinse aid used.

- Switch the dishwasher on using the **ON/OFF** button.
- Switch it off using the **ON/OFF** button.
- Press button **P** three times - a beep will be heard.
- Switch it on using the **ON/OFF** button.
- The current selection level number and rinse aid indicator light flash.
- Press button **P** to select the level of rinse aid quantity to be supplied.
- Switch it off using the **ON/OFF** button

Setting is complete!

If the rinse aid level is set to ZERO (ECO), no rinse aid will be supplied. The LOW RINSE AID indicator light will not be lit if you run out of rinse aid.

A maximum of 4 levels can be set according to the dishwasher model. The factory setting is specific to the model, please follow instruction above to check this for your machine.

- If you see bluish streaks on the dishes, set a low number (1-2).
- If there are drops of water or limescale marks on the dishes, set a high number (3-4).

FILLING THE DETERGENT DISPENSER

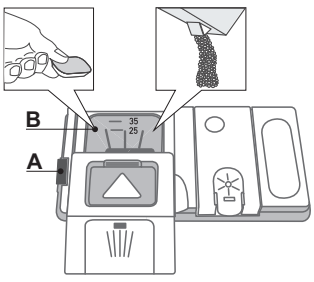

To open the detergent dispenser use the opening device A. Introduce the detergent into the dry dispenser B only. Place the amount of detergent for pre-washing directly inside the tub.

1.When measuring out the detergent refer to the mentioned earlier information to add the proper quantity. Inside the dispenser **B** there are indications to help the detergent dosing.

2. Remove detergent residues from the edges of the dispenser and close the cover until it clicks.
3. Close the lid of the detergent dispenser by pulling it up until the closing device is secured in place.

The detergent dispenser automatically opens up at the right time according to the program. If all-in-one detergents are used, we recommend using the **TABLET** button, because it adjusts the program so that the best washing and drying results are always achieved.

PROGRAMS TABLE

Program	Drying phase	NaturalDry	Available options *)	Detergent container		Duration of wash program (h:min) **)	Water consumption (litres/cycle)	Energy consumption (kWh/cycle)
				Tub	B			
1. Eco ECO 50°	√	√		√	√	3:10	9,5	0,93
2. 6th Sense 6th sense 50-60°	√	√	MULTI ZONE	√	√	1:25 - 3:00	7,0 - 14,0	0,90 - 1,40
3. Intensive 65°	√	-	MULTI ZONE	-	√	2:50	14,0	1,50
4. Daily 50°	√	√	MULTI ZONE	-	√	1:35	13,0	1,15
5. Silent 50°	√	-		-	√	3:30	15,0	1,15
6. Rapid 30' 50°	-	-	MULTI ZONE	-	√	0:30	9,0	0,55
7. Crystals 45°	√	-	MULTI ZONE	-	√	1:40	11,5	1,20
8. Pre-Wash -	-	-	MULTI ZONE	-	-	0:12	4,5	0,01

ECO program data is measured under laboratory conditions according to European Standard EN 50242. Note for Test Laboratories: For information on comparative EN testing conditions, please send an email to the following address: dw_test_support@whirlpool.com
Pre-treatment of the dishes is not needed before any of the programs.
**) Not all options can be used simultaneously.*
***) The duration of the program shown on the display or in the booklet is an estimate calculated on standard conditions. The actual time may vary depending on many factors such as temperature and pressure of the incoming water, room temperature, amount of detergent, quantity and type of load, load balancing, additional selected options and sensor calibration. The sensor calibration can increase program duration up to 20 min.*
Standby consumption: Left-on mode consumption: 6 W - Off mode consumption: 0.5 W

PROGRAMS DESCRIPTION

Instructions on wash cycle selection.

ECO
Normally soiled crockery. Standard program, the most efficient in terms of its combined energy and water consumption.

6th SENSE ®
For normally soiled dishes with dried food residues. Senses the level of soiling on the dishes and adjusts the program accordingly. When the sensor is detecting the soil level an animation appears in the display and the cycle duration is updated.

INTENSIVE
Program recommended for heavily soiled crockery, especially suitable for pans and saucepans (not to be used for delicate items).

DAILY
Normally soiled crockery. Everyday cycle, that ensures optimal cleaning performance in shorter time.

SILENT
Suitable for night-time operation of the appliance. Optimum performance ensured.

RAPID 30'
Program to be used for lightly-soiled dishes with no dried food residues.

CRYSTALS
Cycle for delicate items, which are more sensitive to high temperatures, for example glasses and cups.

PRE-WASH
Crockery to be washed later. No detergent to be used with this program.

Notes:
Please note that cycles like Rapid or Fast are most effective for lightly soiled dishes.
To reduce consumption even further, only run the dishwasher when it is full.

OPTIONS AND FUNCTIONS

OPTIONS can be selected directly by pressing the corresponding button *(see CONTROL PANEL)*.

If an option is not compatible with the selected program *see PROGRAMS TABLE***, the corresponding LED flashes rapidly 3 times and beeps will sound. The option will not be enabled.**

MULTI ZONE

.MULTIZONE

If there are not many dishes to be washed, a half loading may be used in order to save water, electricity and detergent.
Select the program and then press the MULTIZONE button: the symbol of the chosen rack will appear on the display. By default the appliance washes dishes in all racks.
To wash only the specific rack, press this button repeatedly:


shown on the display (only lower rack)


shown on the display (only upper rack)


shown on the display (option is OFF and the appliance will wash dishes in all racks).

Remember to load the upper or lower rack only, and to reduce the amount of detergent accordingly.



TABLET (Tab)

This setting allows you to optimize the performance of the program according to the type of detergent used.
Press the TABLET button (the indicator light will light up) if you use combined detergents in tablet form (rinse aid, salt and detergent in 1 dose).

If you use powder or liquid detergent, this option should be off.



DELAY

The start time of the program may be delayed for a period of time between 1 and 12 hours.

1. Press the DELAY button: the corresponding symbol appears on the display; each time you press the button, the time (1h, 2h, etc. up to max. 12h) from the start of the selected wash cycle will be increased.
2. Select the wash program and close the door: the timer will begin counting down;
3. Once this time has elapsed, the indicator light switches off and the wash cycle begins.

To adjust the delay time and select a shorter period of time, press the DELAY button. To cancel it, press the button repeatedly until the selected delayed start indicator light switches off.
The wash program will start automatically as soon as the door is shut.

The Delay function cannot be set once a wash cycle has been started.

NaturalDry

Door opening system (NaturalDry) is a convection drying system which automatically opens the door during/after drying phase to ensure exceptional drying performance every day. Door opens at the temperature that is safe to your kitchen furniture, thus door will not be opened when the option of POWER CLEAN or TURBO are on.

As additional steam protection, special designed protection foil is added together with the dishwasher. To see how to mount protection foil please refer to (INSTALLATION GUIDE).
NaturalDry functionality could be disabled by the user as follows:

1. Go to the Dishwasher software menu pressing and holding “P” button (6 sec).
2. You switched to NaturalDry Control Menu, you could change status of NaturalDry functionality by pressing “P” button:

   E – enabled **d** – disabled

To confirm the change and exit from the Control Menu please press and hold “P” button (3 sec).

DAILY USE

1. **CHECK WATER CONNECTION**
   Check that the dishwasher is connected to the water supply and that the tap is open.
2. **SWITCH ON THE DISHWASHER**
   Open the door and press the **ON/OFF** button.
3. **LOAD THE RACKS**
   (see LOADING THE RACKS)
4. **FILLING THE DETERGENT DISPENSER**
   (see PROGRAMS TABLE).
5. **CHOOSE THE PROGRAM AND CUSTOMISE THE CYCLE**
   Select the most appropriate program in accordance with the type of crockery and its soiling level *(see PROGRAMS DESCRIPTION)* by pressing the **P** button.
   Select the desired options *(see OPTIONS AND FUNCTIONS)*.
6. **START**
   Start the wash cycle by closing the door. When the program starts you hear a beep.
7. **END OF WASH CYCLE**
   The end of the wash cycle is indicated by beeps and by the flashing of the wash cycle number on the display. Open the door and switch off the appliance by pressing the **ON/OFF** button.
   Wait for a few minutes before removing the crockery - to avoid burns.
   Unload the racks, beginning with the lower one.

The machine will switch off automatically during certain extended periods of inactivity, in order to minimise electricity consumption. If the crockery is only lightly soiled or if it has been rinsed with water before being placed in the dishwasher, reduce the amount of detergent used accordingly.

MODIFYING A RUNNING PROGRAM

If a wrong program was selected, it is possible to change it, provided that it has only just begun: open the door **(be ware of HOT steam!)**, press and hold the **ON/OFF** button, the machine will switch off.
Switch the machine back on using the **ON/OFF** button and select the new wash cycle and any desired options; start the cycle by closing the door.

ADDING EXTRA CROCKERY

Without switching off the machine, open the door **(be ware of HOT steam!)** and place the crockery inside the dishwasher. Close the door and the cycle will begin from the point at which it was interrupted.

ACCIDENTAL INTERRUPTIONS

If the door is opened during the wash cycle, or if there is a power cut, the cycle stops. It starts again from the point at which it was interrupted once the door has been closed or the electricity supply is restored.

For more information about the functions, you can request or download from the WEB a Use & Care Guide by following the instructions on the last page.www

ADVICE AND TIPS

TIPS

Before loading the baskets, remove all food residues from the crockery and empty the glasses. **You do not need to rinse beforehand under running water.**
Arrange the crockery so that it is held in place firmly and does not tip over; and arrange the containers with the openings facing downwards and the concave/convex parts placed obliquely, thus allowing the water to reach every surface and flow freely.
Warning: lids, handles, trays and frying pans do not prevent the sprayer arms from rotating.
Place any small items in the cutlery basket.
Very soiled dishes and pans should be placed in the lower basket because in this sector the water sprays are stronger and allow a higher washing performance.
After loading the appliance, make sure that the sprayer arms can rotate freely.

HYGIENE

To avoid odour and sediment which can be accumulated in the dishwasher please run a high temperature program at least one a month. Use a tea spoon of detergent and run it without the loading to clean your appliance.

UNSUITABLE CROCKERY

- Wooden crockery and cutlery.
- Delicate decorated glasses, artistic handicraft and antique crockery. Their decorations are not resistant.
- Parts in synthetic material which do not withstand high temperatures.
- Copper and tin crockery.
- Crockery soiled with ash, wax, lubricating grease or ink.

The colours of glass decorations and aluminium/silver pieces can change and fade during the washing process. Some types of glass (e.g. crystal objects) can become opaque after a number of wash cycles too.

DAMAGE TO GLASS AND CROCKERY

- Only use glasses and porcelain guaranteed by the manufacturer as dishwasher safe.
- Use a delicate detergent suitable for crockery
- Collect glasses and cutlery from the dishwasher as soon as the wash cycle is over.

LOADING THE RACKS

UPPER RACK

Load delicate and light dishes: glasses, cups, saucers, low salad bowls.

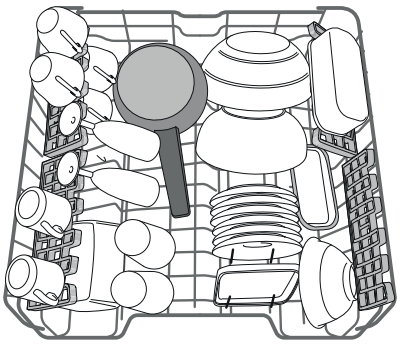

(loading example for the upper rack)

LOWER RACK

For pots, lids, plates, salad bowls, cutlery etc. Large plates and lids should ideally be placed at the sides to avoid interferences with the spray arm
The lower rack has tip-up supports which can be used in a vertical position when arranging plates or in a horizontal position (lower) to load pans and salad bowls easily.

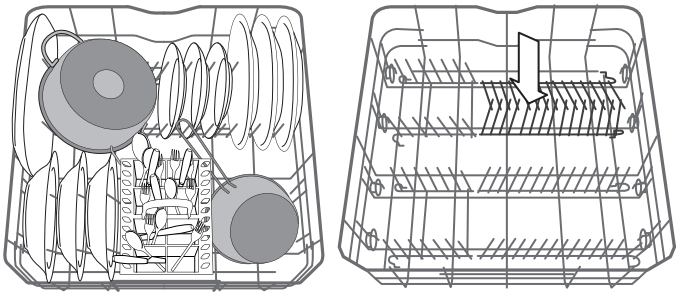

(loading example for the lower rack)

ADJUSTING THE HEIGHT OF THE UPPER RACK

The height of the upper rack can be adjusted: high position to place bulky crockery in the lower basket and low position to make the most of the tip-up supports by creating more space upwards and avoid collision with the items loaded into lower rack.

The upper rack is equipped with a **Upper Rack height adjuster** *(see figure)*, without pressing the levers, lift it up by simply holding the rack sides, as soon as the rack is stable in its upper position.

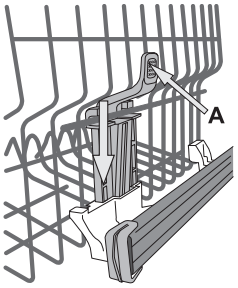

To restore to the lower position, press the levers **A** at the sides of the rack and move the basket downwards.

We strongly recommend that you do not adjust the height of the rack when it is loaded. NEVER raise or lower the basket on one side only.

CUTLERY BASKET

The basket is equipped with top grilles for improved cutlery arrangement. The cutlery basket should be positioned only at the front of the lower rack.

Knives and other utensils with sharp edges must be placed in the cutlery basket with the points facing downwards or they must be positioned horizontally in the tip-up compartments on the upper rack.

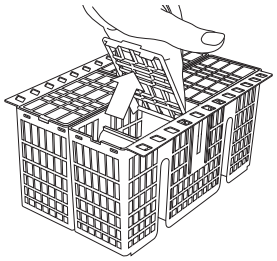

FOLDABLE FLAPS WITH ADJUSTABLE POSITION

The side foldable flaps can be positioned at three different heights to optimize the arrangement of crockery inside the rack.
Wine glasses can be placed safely in the foldable flaps by inserting the stem of each glass into the corresponding slots.
For optimum drying results incline the foldable flaps more. To change the inclination, pull up the foldable flap, slide it slightly and position it as you wish.

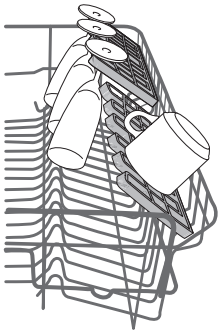

CARE AND MAINTENANCE

CLEANING THE FILTER ASSEMBLY

Regularly clean the filter assembly so that the filters do not clog and that the waste water flows away correctly.
The filter assembly consists of three filters which remove food residues from the washing water and then recirculate the water: to obtain the best washing results, you need to keep them clean.
The dishwasher must not be used without filters or if the filter is loose.
After several washes, check the filter assembly and if necessary clean it thoroughly under running water, using a non-metallic brush and following the instructions below:

1. Turn the cylindrical filter **A** in an anti-clockwise direction and pull it out *(Fig 1)*.
2. Remove the cup filter **B** by exerting a slight pressure on the side flaps *(Fig 2)*.
3. Slide out the stainless-steel plate filter **C** *(Fig 3)*.
4. Inspect the trap and remove any food residues. **NEVER REMOVE** the wash-cycle pump protection (black detail) *(Fig 4)*.

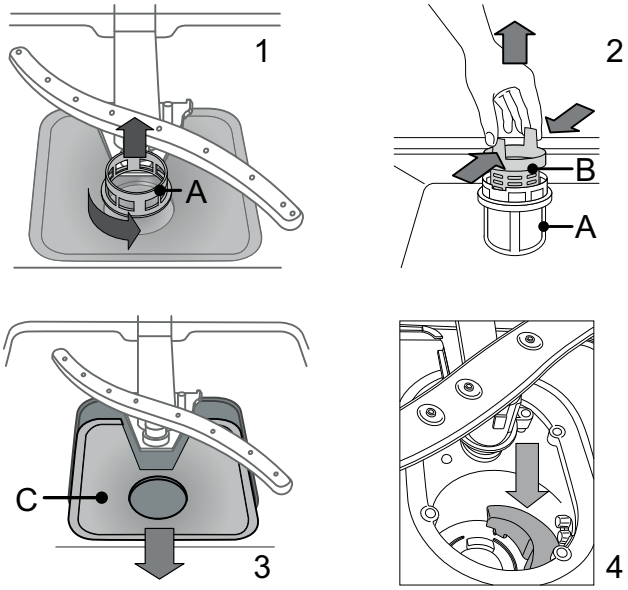

After cleaning the filters, re-place the filter assembly and fix it in position correctly; this is essential for maintaining the efficient operation of the dishwasher.

CLEANING THE SPRAY ARMS

On occasions, food residue may become encrusted onto the spray arms and block the holes used to spray the water. It is therefore recommended that you check the arms from time to time and clean them with a small non-metallic brush.

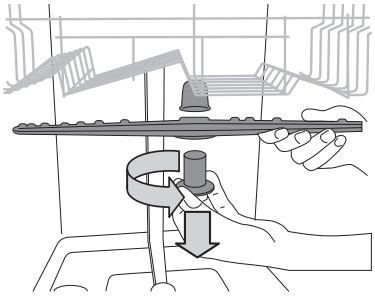

To remove the upper spray arm, turn the plastic locking ring in an anti-clockwise direction. The upper spray arm should be replaced so that the side with the greater number of holes is facing upwards.

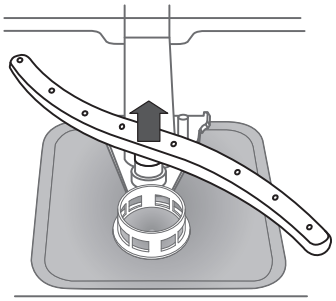

The lower spray arm may be removed by pulling it upwards.

CLEANING THE WATER INLET HOSE

If the water hoses are new or have not been used for an extended period of time, let the water run to make sure it is clear and free of impurities before performing the necessary connections. If this precaution is not taken, the water inlet could become blocked and damage the dishwasher.

TROUBLESHOOTING

Your dishwasher may not work properly.
Before contacting the Service Centre check if the problem can be solved by going through the following list.

PROBLEMS	POSSIBLE CAUSES	SOLUTIONS
The dishwasher won't start or does not respond to commands.	The appliance has not been plugged in properly.	Insert the plug into the socket.
	Power outage.	The dishwasher starts automatically when the power returns.
	The dishwasher door is not closed.	Vigorously push the door until you hear the "*click*".
	It does not respond to commands.	Switch off the appliance by pressing the **ON/OFF** button, switch it back on after approximately one minute and reset the program.
The dishwasher won't drain.	The wash cycle has not finished yet.	Wait until the wash cycle finishes.
	The drain hose is bent.	Check that the drain hose is not bent *(see INSTALATION INSTRUCTION)*.
	The sink drain pipe is blocked.	Clean the sink drain pipe.
	The filter is clogged up with food residues	Clean the filter *(see CLEANING THE FILTER ASSEMBLY)*.
The dishwasher makes excessive noise.	The dishes are rattling against each.	Arrange the crockery correctly *(see LOADING THE RACKS)*.
	An excessive amount of foam has been produced.	The detergent has not been measured out correctly or it is not suitable for use in dishwashers *(see FILLING THE DETERGENT DISPENSER)*. Reset dishwasher by pressing the DRAIN button *(see OPTIONS AND FUNCTIONS)* and run new program without detergent.
The dishes are not clean.	The crockery has not been arranged properly.	Arrange the crockery correctly *(see LOADING THE RACKS)*.
	The spray arms cannot rotate freely, being hindered by the dishes.	Arrange the crockery correctly *(see LOADING THE RACKS)*.
	The wash cycle is too gentle.	Select an appropriate wash cycle *(see PROGRAMS TABLE)*.
	An excessive amount of foam has been produced.	The detergent has not been measured out correctly or it is not suitable for use in dishwashers *(see FILLING THE DETERGENT DISPENSER)*.
	The cap on the rinse aid compartment has not been shut correctly.	Make sure the cap of the rinse aid dispenser is closed.
	The filter is soiled or clogged.	Clean the filter assembly *(see CARE AND MAINTENANCE)*.
	There is no salt.	Fill the salt reservoir *(see FILLING THE SALT RESERVOIR)*.

MAINTENANCE AND TROUBLESHOOTING GUIDE

For more information, maintenance procedures and troubleshooting, see the ***Use and Care Guide***.
The ***Use and Care Guide*** can be obtained by:
• After-Sales Service; phone number see in warranty booklet.
• download from website: **docs.whirlpool.eu**
• use QR code

TECHNICAL DATASHEET

The technical data containing the energy consumption data can be downloaded from the website: **docs.whirlpool.eu**

CONTACTING AFTER-SALES SERVICE

When you contact the After-Sales Service, you must provide the codes shown on the rating plate attached to the left or right side inside the door of the dishwasher. The phone number is listed in the warranty booklet or on the website: **www.whirlpool.eu**

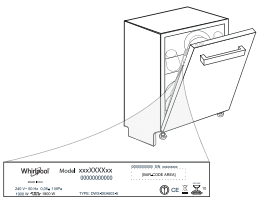

400011323263B
12/2018 mk - Xerox Fabriano