DATASHEET - SOL30/2MC4



Switch-disconnector, DC current, 25A, 2 strings MC4

Part no.	**SOL30/2MC4**
Catalog No.	**120922**
Alternate Catalog No.	**SOL30-2MC4**
EL-Nummer (Norway)	**4300311**

Powering Business Worldwide

Delivery program

Product range			Switchgear for photovoltaic systems
Subrange			DC switch-disconnectors
Rated operational voltage	U_e	V	1000
Degree of Protection			IP65
Protection class			2
Number of conductors			2 pole
Inputs			
Inputs number of strings			2
Inputs connection type			MC4
Outputs			
Outputs number of strings			1
Outputs connection type			MC4
Rated operational current at DC-21A	I_e	A	25
Rated operational current at DC-PV1	I_e	A	25
Design			Enclosed

Technical data

Rated operational current I_e at DC-21A	I_e	A	25
Number of poles			2 pole
Rated operational voltage	U_e	V	1000
Isolating characteristics			yes
Standards			IEC/EN 60947-3 TÜV-certified
Lifespan, mechanical	Operations		100000
Electrical		Operations	1500
Max. operating frequency		Ops/h	120
Climatic proofing			Damp heat, constant, to IEC 60068-2-78 Damp heat, cyclic, to IEC 60068-2-30
Ambient temperature			-25 - +60
Mounting position			As required
Degree of Protection			IP65
Dimensions			
Width		mm	100
Height		mm	215
Depth		mm	120
Weight		kg	0.42
Locking facility			in OFF-Position: yes
Rated short-time withstand current (t=1s)	I_{cw}	kA	0.36
up to 440 V 50/60 Hz	I_{cm}	kA	0.32
Internal resistance		mΩ	7

Design verification as per IEC/EN 61439

Technical data for design verification			
Operating ambient temperature min.		°C	-25

Operating ambient temperature max.	°C	60

Technical data ETIM 7.0

Low-voltage industrial components (EG000017) / Switch disconnector (EC000216)

Electric engineering, automation, process control engineering / Low-voltage switch technology / Off-load switch, circuit breaker, control switch / Switch disconnector (ecl@ss10.0.1-27-37-14-03 [AKF060013])

Version as main switch		No
Version as maintenance-/service switch		No
Version as safety switch		No
Version as emergency stop installation		No
Version as reversing switch		No
Number of switches		1
Max. rated operation voltage Ue AC	V	0
Rated operating voltage	V	1000 - 1000
Rated permanent current Iu	A	30
Rated permanent current at AC-23, 400 V	A	0
Rated permanent current at AC-21, 400 V	A	0
Rated operation power at AC-3, 400 V	kW	0
Rated short-time withstand current Icw	kA	0.36
Rated operation power at AC-23, 400 V	kW	0
Switching power at 400 V	kW	30
Conditioned rated short-circuit current Iq	kA	0
Number of poles		2
Number of auxiliary contacts as normally closed contact		0
Number of auxiliary contacts as normally open contact		0
Number of auxiliary contacts as change-over contact		0
Motor drive optional		No
Motor drive integrated		No
Voltage release optional		Yes
Device construction		Complete device in housing
Suitable for ground mounting		Yes
Suitable for front mounting 4-hole		No
Suitable for front mounting centre		No
Suitable for distribution board installation		No
Suitable for intermediate mounting		No
Colour control element		Black
Type of control element		Toggle
Interlockable		No
Type of electrical connection of main circuit		Other
Degree of protection (IP), front side		IP65
Degree of protection (NEMA)		Other

Approvals

Specially designed for North America		No

Dimensions

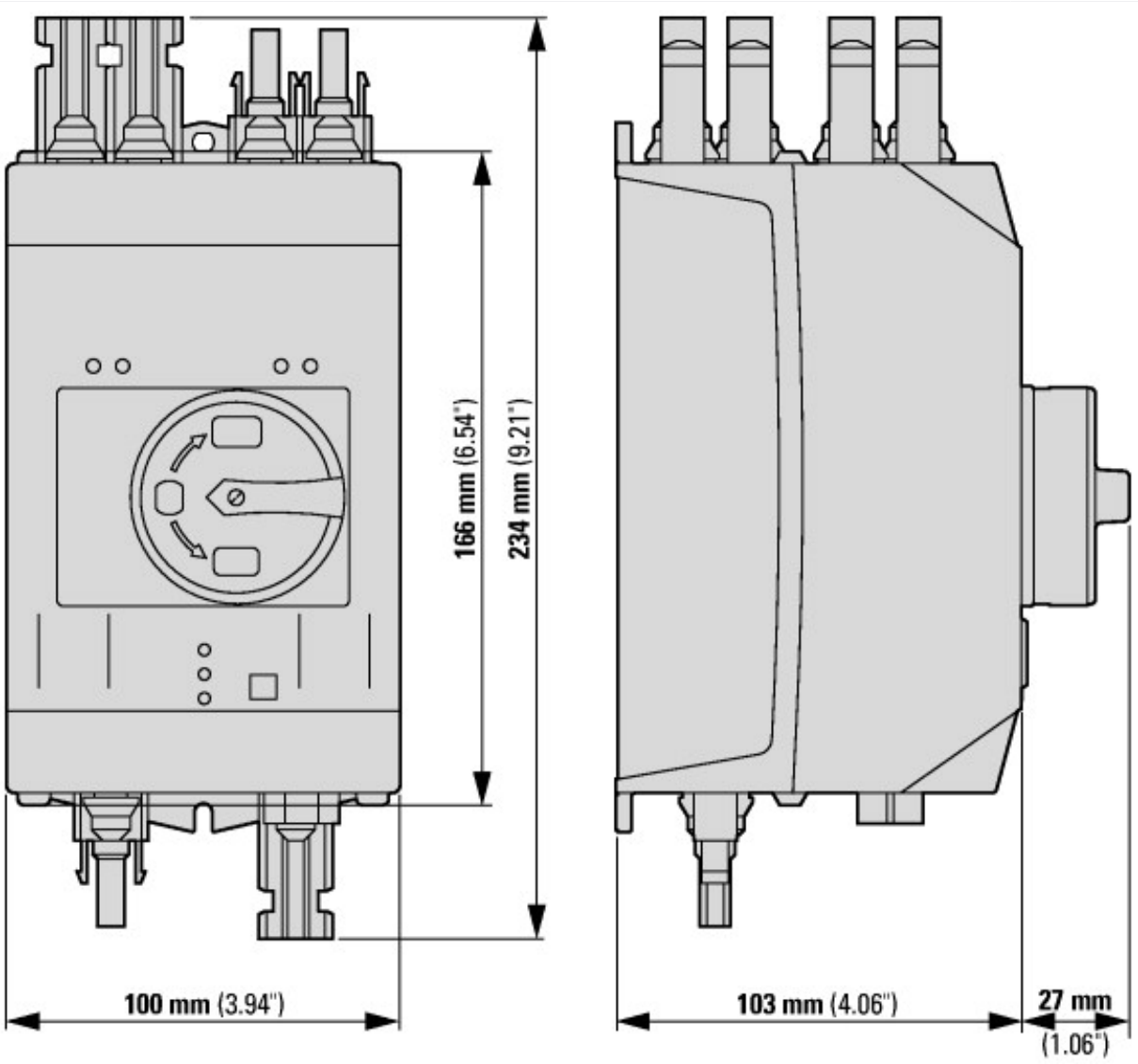

Assets (links)

Declaration of CE Conformity

00003240

Instruction Leaflets

IL008036ZU2018_06

Additional product information (links)

IL008036ZU DC Disconnector, enclosed	
IL008036ZU DC Disconnector, enclosed	ftp://ftp.moeller.net/DOCUMENTATION/AWA_INSTRUCTIONS/IL008036ZU2018_06.pdf
Motor starters and "Special Purpose Ratings" for the North American market	http://www.eaton.eu/ecm/groups/public/@pub/@europe/@electrical/documents/content/pct_3258146.pdf
Busbar Component Adapters for modern Industrial control panels	http://www.moeller.net/binary/ver_techpapers/ver960en.pdf

© 06/2019 by Eaton Industries GmbH