TASKalfa

> PRINT > COPY > SCAN > FAX

TASKalfa 306ci

OPERATION GUIDE



KYOCERA
Document Solutions

Preface

Thank you for purchasing the TASKalfa 306ci.

This Operation Guide is intended to help you operate the machine correctly, perform routine maintenance, and take simple troubleshooting measures as needed so that the machine can always be used in the optimum condition.

Please read this Operation Guide before using the machine.

We recommend the use of our own brand supplies.

Please use our genuine toner containers, which have passed rigorous quality control testing.

The use of non-genuine toner containers may cause failure.

We will not be liable for any damages caused by the use of third party supplies in this machine.

A label is affixed to our genuine supplies, as shown below.

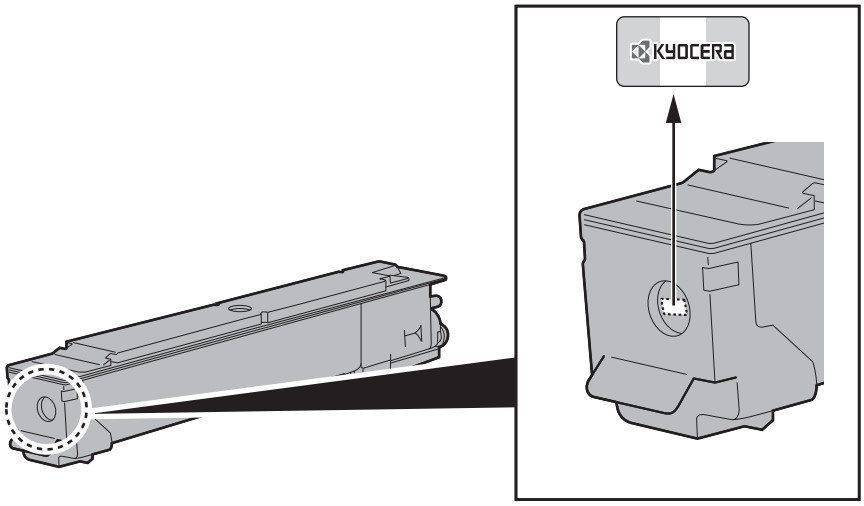

Checking the Equipment's Serial Number

The equipment's serial number is printed in the location shown in the figure.

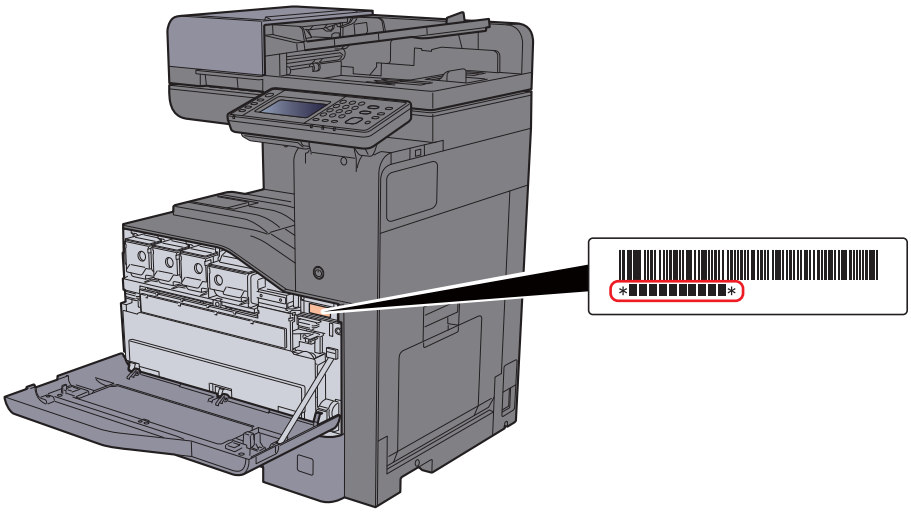

You'll need the equipment's serial number when contacting your Service Representative. Please check the number before contacting your Service Representative.

Contents

Preface ..... **i**
Contents ..... **ii**
Overview ..... **ix**
Machine Features ..... **x**
Color and Image Quality Functions ..... **xiv**
Basic Color Modes xiv
Adjusting Image Quality and Color xv
Guides Provided with the Machine ..... **xvi**
About the Operation Guide (this Guide) ..... **xviii**
Structure of the guide xviii
Conventions Used in This Guide xix
Menu Map ..... **xxi**

1 Legal and Safety Information 1-1

Notice **1-2**
Safety Conventions in This Guide 1-2
Environment 1-3
Precautions for Use 1-4
Laser Safety (Europe) 1-5
Legal Restriction on Copying/Scanning 1-6
EN ISO 7779 1-6
EK1-ITB 2000 1-6
Legal Information 1-7
Energy Saving Control Function 1-13
Automatic 2-Sided Print Function 1-13
Resource Saving - Paper 1-13
Environmental benefits of "Power Management" 1-13
Energy Star (ENERGY STAR®) Program 1-14

2 Installing and Setting up the Machine 2-1

Part Names (Machine Exterior) **2-2**
Part Names (Connectors/Interior) **2-4**
Part Names (With Optional Equipments Attached) **2-5**
Connecting the Machine and Other Devices **2-6**
Connecting Cables **2-7**
Connecting LAN Cable 2-7
Connecting USB Cable 2-8
Connecting the Power Cable 2-8
Power On/Off **2-9**
Power On 2-9
Power Off 2-9
Using the Operation Panel **2-10**
Operation Panel Keys 2-10
Adjusting the Operation Panel Angle 2-11
Touch Panel **2-12**
Home Screen 2-12
Display for Device Information 2-16
Functions key 2-17
Display of Keys That Cannot Be Set 2-18
Enter key and Quick No. Search key 2-19
Help Screen 2-20
Login/Logout **2-21**
Login 2-21
Logout 2-22
Default Settings of the Machine **2-23**
Setting Date and Time 2-23
Network Setup (LAN Cable Connection) 2-24
Energy Saver function **2-26**

Low Power Mode 2-26
Sleep 2-26
Auto Sleep 2-27
Sleep Rules (models for Europe) 2-27
Sleep Level (Energy Saver and Quick Recovery) (models except for Europe) 2-27
Quick Setup Wizard 2-28
Installing Software 2-30
Software on DVD (Windows) 2-30
Installing Software in Windows 2-31
Uninstalling the Software 2-37
Installing Software in Mac Computer 2-38
Setting TWAIN Driver 2-40
Setting WIA Driver 2-42
Checking the Counter 2-43
Additional Preparations for the Administrator 2-44
Sending Documents to a PC 2-44
Strengthening the Security 2-44
Command Center RX 2-46
Accessing Command Center RX 2-47
Changing Security Settings 2-48
Changing Device Information 2-50
E-mail Settings 2-52
Registering Destinations 2-56
Creating a New Custom Box 2-57
Printing a document stored in a Custom Box 2-58
Transferring Data from Our Other Products 2-60
Migrating the Address Book 2-60

3 Preparation before Use 3-1

Loading Paper 3-2
Precaution for Loading Paper 3-2
Selecting the Paper Feeder Units 3-3
Loading in the Cassettes 3-4
Loading in the Large Capacity Feeder 3-8
Paper Stopper 3-10
Envelope Stack Guide 3-10
Stack Level Adjuster 3-11
Preparation for Sending a Document to a Shared Folder in a PC 3-12
Making a note of the computer name and full computer name 3-12
Making a note of the user name and domain name 3-13
Creating a Shared Folder, Making a Note of a Shared Folder 3-14
Configuring Windows Firewall 3-18
Registering Destinations in the Address Book 3-22
Adding a Destination (Address Book) 3-22
Adding a Destination on One Touch Key (One Touch Key) 3-27

4 Printing from PC 4-1

Printer Driver Print Settings Screen 4-2
Displaying the Printer Driver Help 4-3
Changing the Default Printer Driver Settings (Windows 7) 4-3
Printing from PC 4-4
Printing on Standard Sized Paper 4-4
Printing on Non-standard Sized Paper 4-6
Canceling Printing from a Computer 4-8
Printing from the Handheld Device 4-9
Printing by AirPrint 4-9
Printing by Google Cloud Print 4-9
Printing by Mopria 4-9
Printing Data Saved in the Printer 4-10
Specifying the Job Box from a Computer and Storing the Job 4-10
Printing Documents from Private Print Box 4-11
Deleting the Documents Stored in the Private Print Box 4-11

Printing Document from Stored Job Box 4-12
Deleting the Documents Stored in the Stored Job Box 4-12
Printing Document from Quick Copy Box 4-13
Deleting the Documents Stored in the Quick Copy Box 4-13
Printing Document from Proof and Hold Box 4-14
Deleting the Documents Stored in the Proof and Hold Box 4-14
Monitoring the Printer Status (Status Monitor) 4-15
Accessing the Status Monitor 4-15
Exiting the Status Monitor 4-15
Quick View State 4-15
Printing Progress Tab 4-16
Paper Tray Status Tab 4-16
Toner Status Tab 4-16
Alert Tab 4-17
Status Monitor Context Menu 4-17
Status Monitor Notification Settings 4-18

5 Operation on the Machine 5-1

Loading Originals 5-2
Placing Originals on the Platen 5-2
Loading Originals in the Document Processor 5-3
Loading Paper in the Multi Purpose Tray 5-5
Favorites 5-8
Registering Favorite Using the Wizard Mode 5-9
Registering Favorite Using the Program Mode 5-10
Recalling Favorite using the Wizard Mode 5-11
Recalling Favorite using the Program Mode 5-12
Editing Favorite 5-12
Deleting Favorite 5-12
Application 5-13
Installing Applications 5-13
Activating Applications 5-14
Deactivating Applications 5-15
Uninstalling Applications 5-15
Registering Shortcuts 5-16
Adding Shortcuts 5-16
Editing Shortcuts 5-17
Deleting Shortcuts 5-17
Copying 5-18
Basic Operation 5-18
Interrupt Copy 5-19
Canceling Jobs 5-19
Frequently-Used Sending Method 5-20
Sending Document via E-mail 5-21
Configuring Settings before Sending 5-21
Sending Scanned Document via E-mail 5-21
Sending Document to Desired Shared Folder on a Computer (Scan to PC) 5-22
Configuring Settings before Sending 5-22
Sending Document to Desired Shared Folder on a Computer 5-22
Sending Document to Folder on an FTP Server (Scan to FTP) 5-25
Configuring Settings before Sending 5-25
Sending Document to Folder on an FTP Server 5-25
Scanning using TWAIN or WIA 5-27
Configuring Settings before Sending 5-27
Scanning Document Using Application 5-27
Useful Sending Method 5-28
WSD Scan 5-29
Installing Driver Software 5-29
WSD scan 5-30
Scanning with File Management Utility 5-31
Configuring Settings before Sending 5-31
Recalling a Favorite Configured in FMU 5-31
Sending to Different Types of Destinations (Multi Sending) 5-32
Send to Me (E-mail) 5-33
Configuring Settings before Sending 5-33
Sending a document to the mail address of the logged in user 5-33
Canceling Sending Jobs 5-34

Canceling Scanning 5-34
Handling Destination 5-35
Specifying Destination 5-35
Choosing from the Address Book 5-35
Choosing from the External Address Book 5-37
Choosing from the One Touch Key 5-38
Checking and Editing Destinations 5-38
Confirmation Screen of Destinations 5-39
Recall 5-39
How to use the FAX Function 5-40
Using Document Boxes 5-41
What is Custom Box? 5-41
What is Job Box? 5-41
What is Removable Memory Box? 5-41
Sub Address Box/Polling Box 5-41
Basic Operation for Document Box 5-42
Creating a New Custom Box 5-43
Editing Custom Box 5-44
Deleting Custom Box 5-45
Storing Documents 5-45
Printing Documents in Custom Box 5-46
Moving Documents in Custom Box 5-46
Deleting Documents in Custom Box 5-47
Operating using Removable USB Memory 5-48
Printing Documents Stored in Removable USB Memory 5-48
Saving Documents to USB Memory (Scan to USB) 5-50
Check the USB Memory Information 5-51
Removing USB Memory 5-51

6 Using Various Functions 6-1

Functions Available on the Machine 6-2
About Functions Available on the Machine 6-2
How to Select Functions 6-2
Copy 6-2
Send 6-4
Custom Box (Printing) 6-6
Removable Memory (Store File, Printing Documents) 6-7
Functions 6-9
Original Size 6-9
Paper Selection 6-10
Original Orientation 6-11
Mixed Size Originals 6-12
Collate/Offset 6-12
Staple 6-13
Paper Output 6-15
Density 6-16
Original Image 6-16
EcoPrint 6-17
Color Selection 6-18
Color Balance 6-19
Hue Adjustment 6-20
Sharpness 6-21
Contrast 6-21
Background Density Adj. (Background Density Adjustment) 6-22
Saturation 6-22
Prevent Bleed-through 6-23
Zoom 6-23
Combine 6-25
Duplex 6-27
Continuous Scan 6-28
Job Finish Notice 6-29
File Name Entry 6-29
Priority Override 6-30
Quiet Mode 6-30
Skip Blank Page 6-30
Duplex (2-sided Original) 6-31
Sending Size 6-32

File Format 6-33
File Separation 6-36
Scan Resolution 6-36
E-mail Subject/Body 6-36
FTP Encrypted TX 6-37
Delete after Print 6-37
Storing Size 6-38
Encrypted PDF Password 6-38
JPEG/TIFF Print 6-39
XPS Fit to Page 6-39

7 Status/Job Cancel 7-1

Checking Job Status 7-2
Details of the Status Screens 7-3
Checking Detailed Information of Jobs 7-7
Checking Job History 7-8
Checking the Detailed Information of Histories 7-9
Sending the Log History 7-9
Job Operation 7-10
Pause and Resumption of Jobs 7-10
Canceling of Jobs 7-10
Device/Communication 7-11
Checking the Remaining Amount of Toner and Paper (Paper/Supplies) 7-12

8 Setup and Registration (System Menu) 8-1

System Menu 8-2
Operation Method 8-2
System Menu Settings 8-3
Language 8-5
Report 8-5
User Property 8-7
Cassette/MP Tray Settings 8-8
Common Settings 8-10
Home 8-22
Copy 8-22
Send 8-23
Document Box 8-24
FAX 8-24
Application 8-24
Internet 8-25
Address Book/One Touch 8-25
User Login/Job Accounting 8-26
Printer 8-26
System/Network 8-29
Date/Timer/Energy Saver 8-40
Adjustment/Maintenance 8-42

9 User Authentication and Accounting (User Login, Job Accounting) 9-1

Overview of User Login Administration 9-2
Enabling User Login Administration 9-3
Setting User Login Administration 9-4
Authentication Security 9-4
Adding a User (Local User List) 9-5
Changing User Properties 9-8
User Login Administration for Printing 9-12
Managing the Users to Scan Using TWAIN 9-13
Managing the Users to Scan Using WIA 9-14
Managing the Users that Send Faxes from a PC 9-15
Local Authorization 9-16
Group Authorization Settings 9-17
Guest Authorization Set. 9-20
Obtain NW User Property 9-23
Simple Login Settings 9-25

ID Card Settings 9-28
PIN Login Settings 9-29
Using User Login Administration 9-30
Login/Logout 9-30
Overview of Job Accounting 9-31
Enabling Job Accounting 9-32
Job Accounting Access 9-33
Setting an Account 9-34
Adding an Account 9-34
Restricting the Use of the Machine 9-35
Editing an Account 9-36
Deleting an Account 9-37
Job Accounting for Printing 9-38
Job Accounting for Scan Using TWAIN 9-39
Job Accounting for Scan Using WIA 9-40
Job Accounting for the FAX Transmitted from a Computer 9-41
Configuring Job Accounting 9-42
Default Setting 9-42
Counting the Number of Pages Printed 9-43
Print Accounting Report 9-44
Using Job Accounting 9-45
Login/Logout 9-45
Unknown ID Job 9-46

10 Troubleshooting 10-1

Regular Maintenance 10-2
Cleaning 10-2
Cleaning Glass Platen 10-2
Cleaning inside of the Document Processor 10-2
Cleaning Slit Grass 10-3
Replace the toner container 10-4
Replace the Waste Toner Box 10-7
Loading Paper 10-10
Replacing Staples 10-11
Troubleshooting 10-13
Solving Malfunctions 10-13
Machine Operation Trouble 10-13
Printed Image Trouble 10-16
Color printing trouble 10-19
Responding to Messages 10-20
Adjustment/Maintenance 10-30
Overview of Adjustment/Maintenance 10-30
Color Registration Procedure 10-30
Tone Curve Adjustment 10-35
Drum Refresh 10-36
Calibration 10-37
Laser Scanner Cleaning 10-37
Clearing Paper Jams 10-38
Jam Location Indicators 10-38
Remove any jammed paper in Cassette 1 and 2 10-40
Remove any jammed paper in Cassette 3 (500-sheet x 2) 10-41
Remove any jammed paper in Cassette 3 (2000-sheet x 1) 10-43
Remove any jammed paper in Cassette 4 (500-sheet x 2) 10-45
Remove any jammed paper in the Multi Purpose Tray 10-47
Remove any jammed paper in Right Cover 1 10-48
Remove any jammed paper in Right Cover 2 10-51
Remove any jammed paper in Right Cover 3 (500-sheet x 2) 10-52
Remove any jammed paper in Right Cover 3 (2000-sheet x 1) 10-53
Remove any jammed paper in the Bridge Unit 10-54
Remove any jammed paper in the Mailbox 10-55
Remove any jammed paper in the Inner Finisher 10-56
Remove any jammed paper in the Document Processor 10-57
Clearing a Staple Jam 10-59
Clearing a staple jam 10-59

11 Appendix 11-1

Optional Equipment 11-2
Overview of Optional Equipment 11-2
Optional Applications 11-6
Character Entry Method 11-8
Entry Screens 11-8
Entering Characters 11-10
Paper 11-11
Basic Paper Specifications 11-11
Choosing the Appropriate Paper 11-12
Special Paper 11-15
Specifications 11-19
Machine 11-19
Copy Functions 11-21
Printer Functions 11-21
Scanner Functions 11-22
Document Processor 11-22
Paper Feeder (500-sheet) 11-23
Paper Feeder (500-sheet x 2) 11-23
Paper Feeder (2,000-sheet) 11-23
Innner Finisher 11-24
Mailbox 11-24
Job separator 11-25
Glossary 11-26
Index Index-1

Overview

This machine provides standard copy and print functions, and a scanned image can be sent to an E-mail recipient as an attachment or to a computer on the same network. On products with a FAX function, it is also possible to use the fax function.

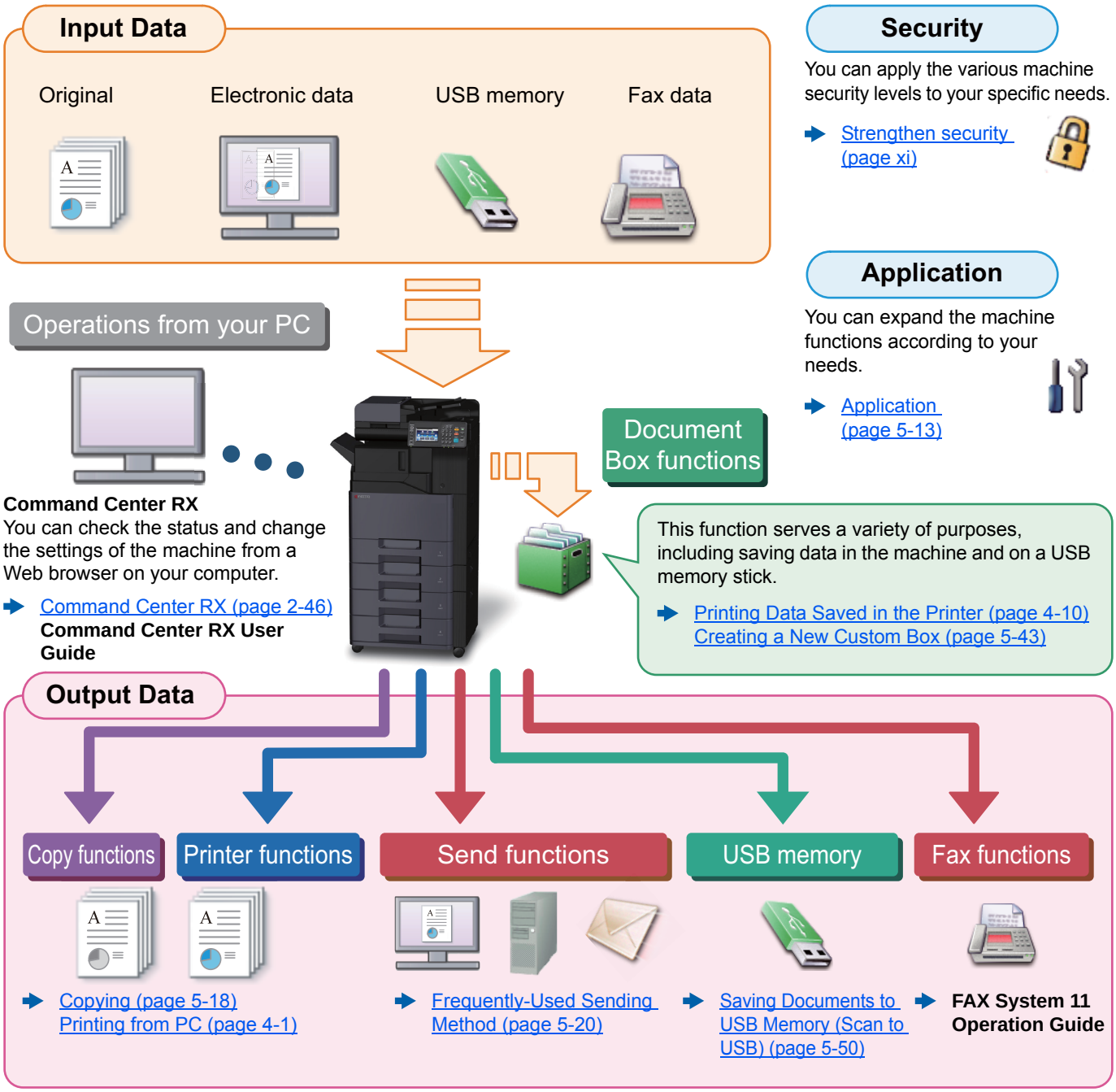

NOTE

- Before using the machine, be sure to read the following:

Legal and Safety Information (page 1-1)

- To prepare the device for use, including setting up cable connections and installing software.

Installing and Setting up the Machine (page 2-1)

- To learn how to load paper, set up shared folders, and add addresses to the address book, refer to the following:

Preparation before Use (page 3-1)

Machine Features

The machine is equipped with many useful functions.

Using Various Functions (page 6-1)

Here are some examples.

Optimize your office workflow

Access to frequently used functions with just one touch (Favorites)

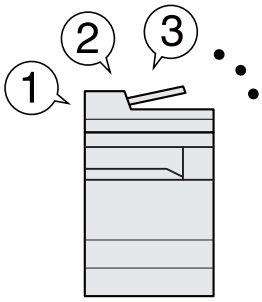

You can preset frequently used functions.

Once you register frequently used settings as favorite, you can call up the settings easily. Using this favorite brings the same results even if operated by another person.

Favorites (page 5-8)

Interrupt other running jobs and execute your copy job immediately (Interrupt Copy)

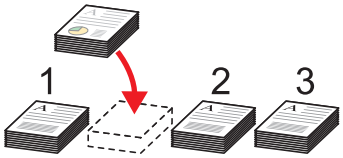

You can interrupt other running jobs and execute your copy job immediately. When other users are copying a large number of sheets, this function allows you to interrupt those jobs and make your copies immediately.

When the interruption copy ends, the machine resumes the paused print jobs.

Interrupt Copy (page 5-19)

Scan originals of different sizes at a time (Mixed Size Originals)

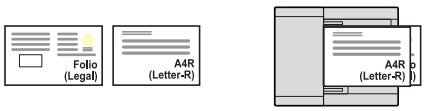

It is useful when preparing conference materials.

You can set the different sized originals at one time so you don't need to reset the originals regardless of size.

Mixed Size Originals (page 6-12)

Optimize your office workflow

Scan a large number of originals in separate batches and produce as one job (Continuous Scan)

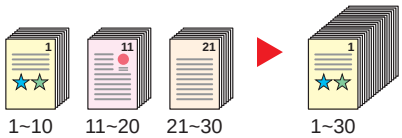

It is useful when preparing many-page handouts.

When a large number of originals cannot be placed in the document processor at one time, the originals can be scanned in separate batches and then copied or sent as one job.

Continuous Scan (page 6-28)

Send one time with multiple sending options (Multi Sending)

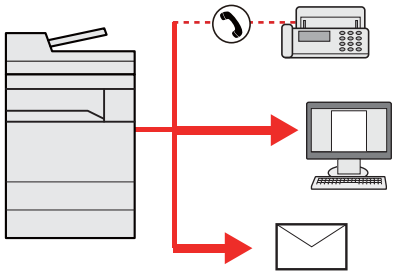

You can send a same document to the multiple destinations using a different method.

You can specify multiple destinations of different send methods such as E-mail, SMB, and Fax.

You can reduce your workflow by sending a job at once.

Sending to Different Types of Destinations (Multi Sending) (page 5-32)

Save frequently used documents in the machine (Custom Box)

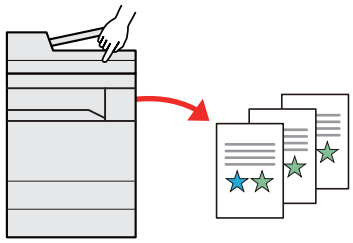

You can save the frequently used document in the machine and print it when needed.

Creating a New Custom Box (page 5-43)

Save energy and cost

Save energy as needed (Energy Saver function)

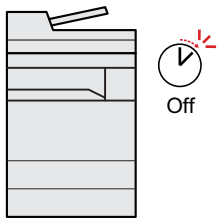

The machine is equipped with Energy Saver function that automatically switched into Sleep Mode.

Energy Saver function (page 2-26)

Reduce paper use (Paper Saving Printing)

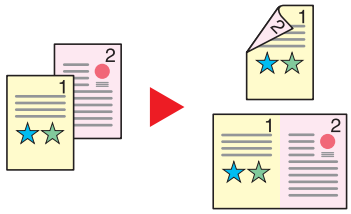

You can print originals on both sides of the paper. You can also print multiple originals onto one sheet.

Favorites (page 5-8)

Skip blank pages when printing (Skip Blank Page)

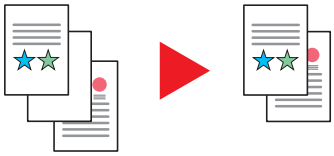

When there are blank pages in a scanned document, this function skips the blank pages and prints only pages that are not blank.

Skip Blank Page (page 6-30)

Create attractive documents

Prevent image bleed-through (Prevent Bleed-through)

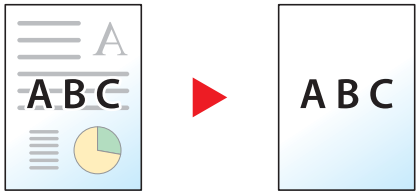

You can prevent image bleed-through from the reverse side when scanning thin originals.

Prevent Bleed-through (page 6-23)

Strengthen security

Password-protect a PDF file (PDF Encryption Functions)

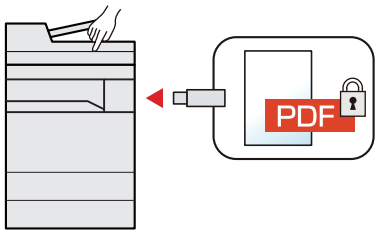

Use the PDF format's password security options to restrict document viewing, printing and editing.

Encrypted PDF Password (page 6-38)

Protect data on the SSD (Encryption / Overwrite)

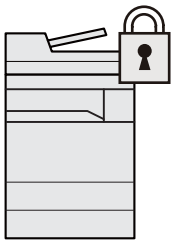

You can overwrite the unnecessary data that remains on the SSD automatically.

To prevent an external leakage, the machine is able to encrypt data before writing it to the SSD.

Data Security (page 8-39)

Strengthen security

Prevent loss of finished documents (Private Print)

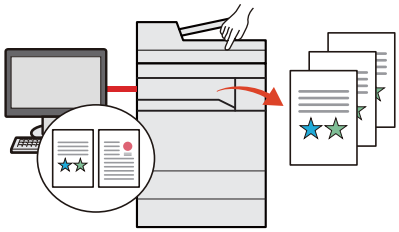

Temporarily saving print jobs in the main unit document box and outputting them when in front of the device can prevent documents from being taken by others.

Printing Data Saved in the Printer (page 4-10)

Log in by ID card (Card Authentication)

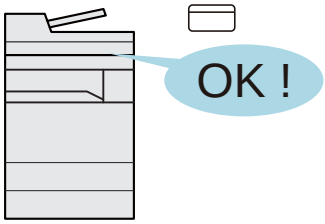

You can log in simply by touching an ID card. You don't need to enter your user name and password.

Card Authentication Kit(B) "Card Authentication Kit" (page 11-5)

Strengthen security (Settings for Administrator)

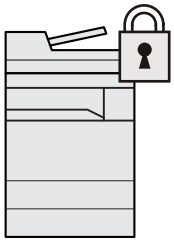

Various functions are available for administrators to strengthen security.

Strengthening the Security (page 2-44)

Use functions more efficiently

Make the machine quiet (Quiet Mode)

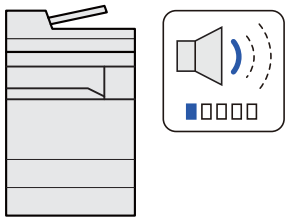

You can make the machine quiet by reducing its running noise. You can configure this mode by job.

Quiet Mode (page 6-30)

Expand functions as necessary (Application)

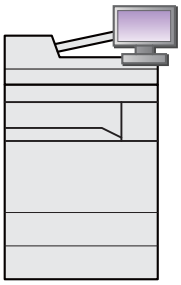

The functionality of the machine can be expanded by installing applications.

Applications that help you perform your daily more efficiently such as a scan feature and an authentication feature are available.

Application (page 5-13)

Install the machine without concerning the network cables (Wireless Network)

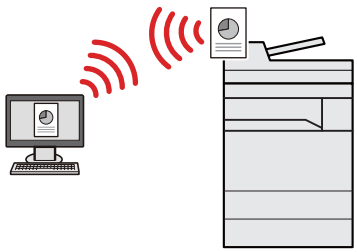

If there is a wireless LAN environment, it is possible to install the unit without worrying about the network wiring.

Setup (page 8-35)

Use functions more efficiently

Use USB memory (USB Memory)

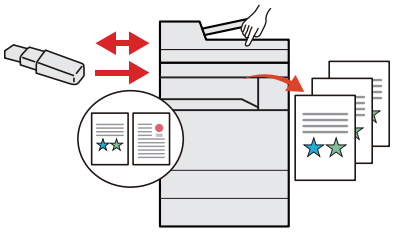

It is useful when you need to print documents outside your office or you cannot print documents from your PC.

You can print the document from the USB memory by plugging it directly into the machine.

Original scanned at the machine can be saved in the USB memory also.

Printing Documents Stored in Removable USB Memory (page 5-48)
Saving Documents to USB Memory (Scan to USB) (page 5-50)

Specify image file format (File Format)

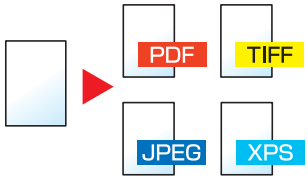

You can select the various file formats when sending/storing images.

File Format (page 6-33)

Perform remote operation (Command Center RX)



You can access to the machine remotely to print, send or download data.

Administrators can configure the machine behavior or management settings.

Command Center RX (page 2-46)

Color and Image Quality Functions

The machine is equipped with various color and image quality functions. You can adjust the scanned image as desired.

Basic Color Modes

The basic color modes are as follows.

Color mode	Description	Reference image		Reference page
		Before	After	
Auto Color	Automatically recognizes whether a document being scanned is color or black & white.			page 6-18
Full Color	Scans a document in full color.			page 6-18
Grayscale	Scans a document in grayscale.			page 6-18
Black & White	Scans a document in black & white.			page 6-18
Single Color	Prints in any desired color.			page 6-18

For details, refer to the following:

Color Selection (page 6-18)

Adjusting Image Quality and Color

To adjust the image quality or color of an image, use the following functions.

I want to...	Sample image		Function	Page
	Before	After		
Adjust the color precisely.				
Adjust the density.			Density	page 6-16
Adjust the color by strengthening blue or red tones. **Example: Strengthening red**			Color Balance	page 6-19
Change the image by individually adjusting each of the six colors: red, blue, green, cyan, magenta, and yellow. **Example: Changing red tones close to yellow to yellow, and cyan tones close to blue to blue**			Hue adjustment	page 6-20
Adjust the saturation.			Saturation	page 6-22
Adjust the image quality precisely				
Emphasize or blur the image outline. **Example: Emphasize the image outlines**			Sharpness	page 6-21
Adjust the difference between dark and light parts of the image.			Contrast	page 6-21
Darken or lighten the background (the area with no texts or images) of a document. **Example: Lightening the background**			Background Density	page 6-22
Prevent bleed-through in 2-sided originals.			Prevent Bleed-through	page 6-23
Adjust the scanned image				
Decrease the file size and produce the characters clearly.			File format [High Comp. PDF]	page 6-33

Guides Provided with the Machine

The following guides are provided with the machine. Refer to each guide as needed.

The contents of the guides are subject to change without notice for the purpose of improvement of machine performance.

Printed guides

Start using the machine quickly

Quick Guide

Explains how to use basic functions of the machine, how to use convenient features, how to perform routine maintenance, and what to do when problems occur.

For safe use of the machine

Safety Guide

Provides safety and cautionary information for installation environment and use of the machine. Be sure to read this guide before using the machine.

Safety Guide (TASKalfa 306ci)

Indicates the space required for machine installation, and describes the cautionary labels and other safety information. Be sure to read this guide before using the machine.

Guides (PDF) on the DVD (Product Library)

Use the machine thoughtfully	**Operation Guide (This Guide)** Explains how to load paper and perform copy, print and scan operations, and indicates default settings and other information.
Use the fax functions	**FAX System 11 Operation Guide** Explains how to use the fax function.
Use the ID card	**Card Authentication Kit (B) Operation Guide** Explains how to perform authentication using the ID card.
Strengthen security	**Data Security Kit (E) Operation Guide** Explains how to introduce and use the Data Security kit (E), and how to overwrite and encrypt data.
Easily register machine information and configure settings	**Command Center RX User Guide** Explains how to access the machine from a Web browser on your computer to check and change settings.
Print data from a computer	**Printer Driver User Guide** Explains how to install the printer driver and use the printer function.
Directly print a PDF file	**KYOCERA Net Direct Print Operation Guide** Explains how to print PDF files without launching Adobe Acrobat or Reader.
Monitor the machine and printers on the network	**KYOCERA Net Viewer User Guide** Explains how to monitor your network printing system (the machine) with KYOCERA Net Viewer.
Scan images and save with information	**File Management Utility User Guide** Explains how to use File Management Utility to set various parameters and send and save scanned documents.
Print without using the printer driver	**PRESCRIBE Commands Command Reference** Describes the native printer language (PRESCRIBE commands). **PRESCRIBE Commands Technical Reference** Describes the PRESCRIBE command functions and control for each type of emulation.
Adjust the print or scan position	**Maintenance Menu User Guide** Maintenance Menu provides the explanation on how to configure the print, scan, and other settings.

Install the following versions of Adobe Reader to view the manuals on the DVD.
Version 8.0 or later

About the Operation Guide (this Guide)

Structure of the guide

The Operation Guide contains the following chapters.

Chapter		Contents
1	**Legal and Safety Information**	Provides precautions regarding use of the machine and trademark information.
2	**Installing and Setting up the Machine**	Explains part names, cable connections, installation of the software, login, logout, and other matters related to administration of the machine.
3	**Preparation before Use**	Explains preparations and settings that are required in order to use the machine, such as how to load paper, and create an address book.
4	**Printing from PC**	Explains functions that are available when the machine is used as a printer.
5	**Operation on the Machine**	Explains the basic procedures for using the machine, such as placing originals, making copies, sending documents, and using document boxes.
6	**Using Various Functions**	Explains convenient functions that are available on the machine.
7	**Status/Job Cancel**	Explains how to check the status of a job and the job history, and how to cancel jobs being printed or waiting to print. Also explains how to check paper and toner levels, how to check the device status, and how to cancel fax transmission.
8	**Setup and Registration (System Menu)**	Explains System Menu and how it relates to the operation of the machine.
9	**User Authentication and Accounting (User Login, Job Accounting)**	Explains user login and job accounting.
10	**Troubleshooting**	Explains what to do when toner runs out, an error is displayed, or a paper jam or other problem occurs.
11	**Appendix**	Describes convenient options that are available for the machine. Provides information on media types and paper sizes, and gives a glossary of terms. Explains how to enter characters, and lists the specifications of the machine.

Conventions Used in This Guide

Adobe Reader XI is used as an example in the explanations below.

Click an item in the Table of Contents to jump to the corresponding page.

Click to move from the current page to the previously displayed page. This is convenient when you want to return to the page from which you jumped to the current page.

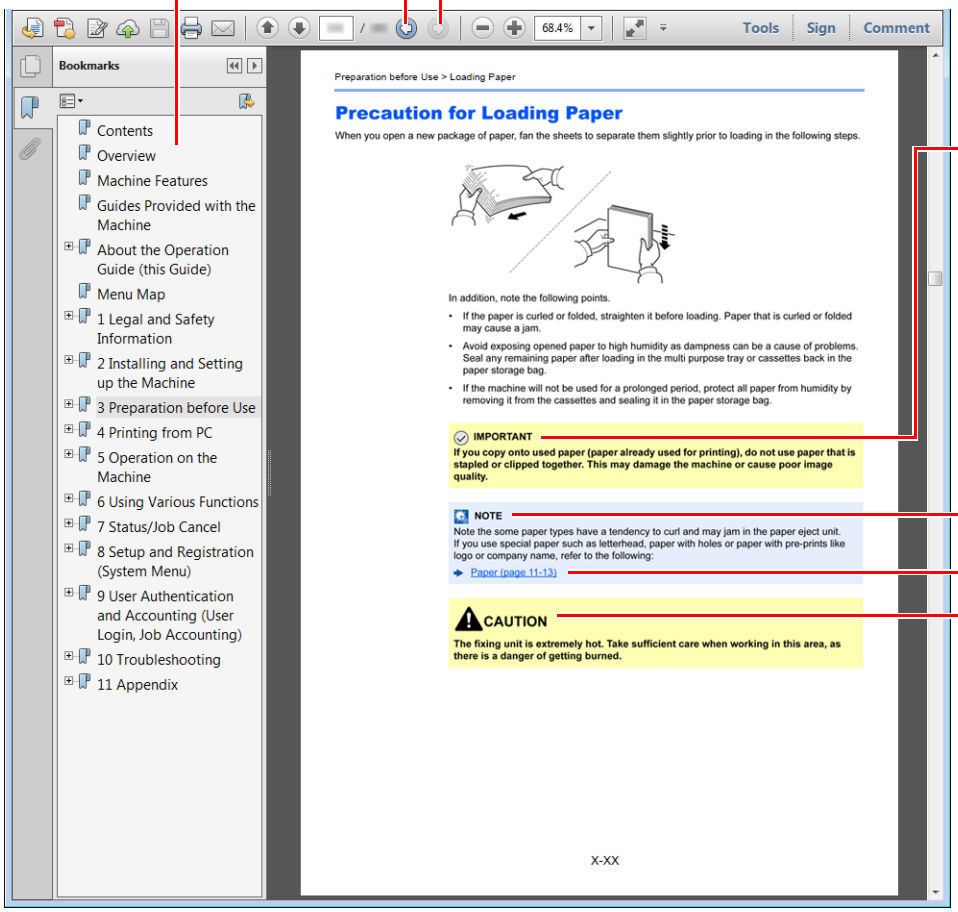

IMPORTANT

Indicates operational requirements and restrictions to operate the machine correctly, and avoid damage to the machine or property.

NOTE

Indicates supplemental explanations and reference information for operations.

Refer to

Click the underlined text to jump to the corresponding page.

CAUTION

Indicates that personal injury or mechanical damage may result from insufficient attention to or incorrect compliance with the related points.

NOTE

The items that appear in Adobe Reader vary depending on how it is used. If the Table of Contents or tools do not appear, refer to Adobe Reader Help.

Certain items are indicated in this guide by the conventions described below.

Convention	Description
[**Bold**]	Indicates keys and buttons.
"Regular"	Indicates a message or setting.

Conventions used in procedures for operating the machine

In this Operation Guide, continuous operation of the keys on the touch panel is as follows:

Actual procedure	Procedure indicated in this guide
Select the [**System Menu/Counter**] key. ▼ Select [∨]. ▼ Select [**Common Settings**]. ▼ Select [**Sound**].	[**System Menu/Counter**] key > [**Common Settings**] > [**Sound**]

Menu Map

This is a list of menus displayed on the touch panel. Depending on the settings, some menus may not be displayed. Some menu names may differ from their reference titles.

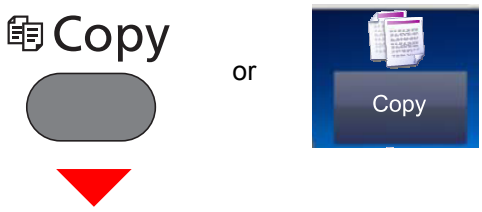

Paper Selection (page 6-10)	
Zoom (page 6-23)	
Density (page 6-16)	
Duplex (page 6-27)	
Combine (page 6-25)	
Color Selection (page 6-18)	
Functions	Quiet Mode (page 6-30)
	Collate/Offset (page 6-12)
	Original Size (page 6-9)
	Original Orientation (page 6-11)
	Mixed Size Originals (page 6-12)
	Paper Output (page 6-15)
	Staple (page 6-13)
	Original Image (page 6-16)
	EcoPrint (page 6-17)
	Hue Adjustment (page 6-20)
	Color Balance (page 6-19)
	Sharpness (page 6-21)
	Contrast (page 6-21)
	Background Density Adj. (page 6-22)
	Prevent Bleed-through (page 6-23)
	Skip Blank Page (page 6-30)
	Saturation (page 6-22)
	Continuous Scan (page 6-28)
	Job Finish Notice (page 6-29)
	File Name Entry (page 6-29)
	Priority Override (page 6-30)

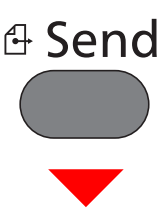

or

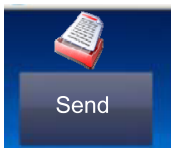

One Touch Key (page 5-38)	
Address Book (page 5-35)	
Ext Address Book (Refer to **Command Center RX User Guide**.)	
E-mail (page 5-21)	
Folder (page 5-22)(page 5-25)	
FAX (Refer to **FAX System 11 Operation Guide**.)	
WSD Scan (page 5-30)	
Functions	Color Selection (page 6-18)
	Quiet Mode (page 6-30)
	File Format (page 6-33)
	Original Size (page 6-9)
	Original Orientation (page 6-11)
	Mixed Size Originals (page 6-12)
	Duplex (page 6-31)
	Sending Size (page 6-32)
	File Separation (page 6-36)
	Scan Resolution (page 6-36)
	Density (page 6-16)
	Original Image (page 6-16)
	Sharpness (page 6-21)
	Contrast (page 6-21)
	Background Density Adj. (page 6-22)
	Prevent Bleed-through (page 6-23)
	Skip Blank Page (page 6-30)
	FAX TX Resolution (Refer to **FAX System 11 Operation Guide**.)
	Zoom (page 6-23)
	Continuous Scan (page 6-28)
	File Name Entry (page 6-29)
	E-mail Subject/Body (page 6-36)
	Job Finish Notice (page 6-29)
	FTP Encrypted TX (page 6-37)
	FAX Delayed Transmission (Refer to **FAX System 11 Operation Guide**.)

Functions	FAX Direct Transmission (Refer to **FAX System 11 Operation Guide**.)
	FAX Polling RX (Refer to **FAX System 11 Operation Guide**.)
	FAX TX Report (Refer to **FAX System 11 Operation Guide**.)



Custom Box	**Menu**	**Print**	Paper Selection (page 6-10)	
			Collate/Offset (page 6-12)	
			Duplex (page 6-27)	
			Delete after Print (page 6-37)	
			Quiet Mode (page 6-30)	
			Functions	Priority Override (page 6-30)
				File Name Entry (page 6-29)
				Job Finish Notice (page 6-29)
				EcoPrint (page 6-17)

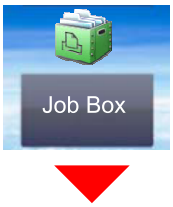

Job Box	Private Print/Stored Job (page 4-11)
	Quick Copy/Proof and Hold (page 4-13)

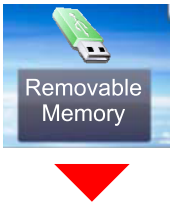

Removable Memory	**Print**	Paper Selection (page 6-10)		
		Collate/Offset (page 6-12)		
		Duplex (page 6-27)		
		Quiet Mode (page 6-30)		
		Color Selection (page 6-18)		
		Functions	EcoPrint (page 6-17)	
			Job Finish Notice (page 6-29)	
			Priority Override (page 6-30)	
			Encrypted PDF Password (page 6-38)	
			JPEG/TIFF Print (page 6-39)	
			XPS Fit to Page (page 6-39)	
	Menu	**Store File**	File Format (page 6-33)	
			Duplex (page 6-31)	
			Scan Resolution (page 6-36)	
			Density (page 6-16)	
			File Name Entry (page 6-29)	
			Color Selection (page 6-18)	
			Functions	Quiet Mode (page 6-30)
				Original Size (page 6-9)
				Original Orientation (page 6-11)
				Mixed Size Originals (page 6-12)
				Storing Size (page 6-38)
				Original Image (page 6-16)
				Sharpness (page 6-21)
				Contrast (page 6-21)
				Background Density Adj. (page 6-22)
				Prevent Bleed-through (page 6-23)
				Skip Blank Page (page 6-30)
				Zoom (page 6-23)
				Continuous Scan (page 6-28)
				Job Finish Notice (page 6-29)
				File Separation (page 6-36)



Sub Address Box (Refer to FAX System 11 Operation Guide.)



Polling Box (Refer to FAX System 11 Operation Guide.)

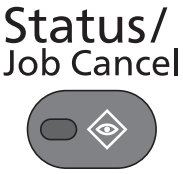

or



Print Job Status (page 7-8)
Send Job Status (page 7-4)
Store Job Status (page 7-5)
Scheduled Job (page 7-6)
Print Job Log (page 7-8)
Send Job Log (page 7-8)
Store Job Log (page 7-8)
FAX Job Log (Refer to **FAX System 11 Operation Guide**.)
Scanner (page 7-11)
Printer (page 7-11)
FAX (refer to **FAX System 11 Operation Guide**.)
Toner Status (page 7-12)
Paper Status (page 7-12)
Removable Memory (page 7-11)
USB Keyboard (page 7-11)
Staple (page 7-12)
Network Connection Status (page 7-11)
Option Network Connection Status (page 7-11)
Wireless Network (page 7-11)
SSD (page 7-11)

System Menu / Counter



or





Quick Setup Wizard	FAX Setup (page 2-28)	
	Energy Saver Setup (page 2-28)	
	Network Setup (page 2-28)	
Language (page 8-5)		
Report	**Report Print**	Status Page (page 8-5)
		Font List (page 8-5)
		Network Status (page 8-5)
		Service Status (page 8-6)
		Accounting Report (page 8-6)
		Sub Address Box List (Refer to **FAX System 11 Operation Guide**.)
		FAX List (Index) (Refer to **FAX System 11 Operation Guide**.)
		FAX List (No.) (Refer to **FAX System 11 Operation Guide**.)
		Outgoing FAX Report (Refer to **FAX System 11 Operation Guide**.)
		Incoming FAX Report (Refer to **FAX System 11 Operation Guide**.)
		Optional Network Status (page 8-6)
	Admin Report Settings	Outgoing FAX Report (Refer to **FAX System 11 Operation Guide**.)
		Incoming FAX Report (Refer to **FAX System 11 Operation Guide**.)
	Result Report Setting	Send Result Report (page 8-6)
		RX Result Report (Refer to **FAX System 11 Operation Guide**.)
		Job Finish Notice Setting (page 8-6)
	Send Log History	Sending Log History (page 8-7)
		Auto Sending (page 8-7)
		Destination (page 8-7)
		Job Log Subject (page 8-7)
		Personal Information (page 8-7)
Counter	Printed Pages (page 2-43)	
	Scanned Pages (page 2-43)	
User Property (page 9-8)		
Cassette/MP Tray Settings	Cassette 1 (page 8-8)	
	Cassette 2 (page 8-8)	
	Cassette 3 (page 8-8)	
	Cassette 4 (page 8-8)	
	Multi Purpose Tray (page 8-9)	

Common Settings	Default Screen (page 8-10)	
	Sound	Buzzer (page 8-10)
		FAX Speaker Volume (Refer to **FAX System 11 Operation Guide**.)
		FAX Monitor Volume (Refer to **FAX System 11 Operation Guide**.)
	Original Settings	Custom Original Size (page 8-11)
		Auto Detect Original Size (DP) (page 8-11)
		Default Original Size (Platen) (page 8-12)
		Default Original Size (page 8-12)
	Paper Settings	Custom Paper Size (page 8-13)
		Media Type Settings (page 8-15)
		Default Paper Source (page 8-14)
		Paper Selection (page 8-14)
		Media for Auto (Color) (page 8-14)
		Media for Auto (B & W) (page 8-14)
		Special Paper Action (page 8-14)
	Function Defaults	File Format (page 8-16)
		Original Orientation (page 8-16)
		Collate/Offset (page 8-16)
		File Separation (page 8-16)
		Scan Resolution (page 8-16)
		Color Selection (Copy) (page 8-16)
		Color Select.(Send/Store) (page 8-16)
		Original Image (Copy) (page 8-16)
		Original Image (Send/Store) (page 8-16)
		Background Density Adj. (Copy) (page 8-16)
		Background Density Adj. (Send/Store) (page 8-16)
		EcoPrint (page 8-16)
		Prevent Bleed-through (Copy) (page 8-16)
		Prevent Bleed-through (Send/Store) (page 8-16)
		Skip Blank Page (Copy) (page 8-16)
		Skip Blank Page (Send/Store) (page 8-16)
		FAX TX Resolution (Refer to **FAX System 11 Operation Guide**.)
		Zoom (page 8-17)

Common Settings	**Function Defaults**	Continuous Scan (Except FAX) (page 8-17)	
		Continuous Scan (FAX) (Refer to **FAX System 11 Operation Guide**.)	
		File Name Entry (page 8-17)	
		E-mail Subject/Body (page 8-17)	
		FTP Encrypted TX (page 8-17)	
		JPEG/TIFF Print (page 8-17)	
		XPS Fit to Page (page 8-17)	
		Detail Settings	Image Quality (page 8-17)
			PDF/A (page 8-17)
			High Comp. PDF (page 8-17)
			Blank Detection Level (Copy) (page 8-17)
			Blank Detection Level (Send/Store) (page 8-17)
	Paper Output (page 8-18)		
	Preset Limit (page 8-18)		
	Error Handling	Duplexing Error (page 8-19)	
		Finishing Error (page 8-19)	
		No Staple Error (page 8-19)	
		Stapling Limit Error (page 8-19)	
		Paper Mismatch Error (page 8-19)	
		Inserted Paper Mismatch (page 8-19)	
	Color Toner Empty Action (page 8-19)		
	Measurement (page 8-20)		
	Low Toner Alert Level (page 8-20)		
	Keyboard Layout (page 8-20)		
	USB Keyboard Type (page 8-20)		
	Offset Documents by Job (page 8-20)		
	Offset One Page Documents (page 8-21)		
	Format SSD (page 8-21)		
	Format SD Card (page 8-21)		
	Display Status/Log (page 8-21)		
	Function Key Usage (page 8-22)		
Home	Customize Desktop (page 2-13)		
	Customize Taskbar (page 2-13)		
	Wallpaper (page 2-13)		
Copy	Auto Paper Selection (page 8-22)		
	Auto % Priority (page 8-22)		
	Reserve Next Priority (page 8-22)		
	DP Read Action (page 8-22)		

Send	Dest. Check before Send (page 8-23)		
	Entry Check for New Dest. (page 8-23)		
	Send and Forward (page 8-23)		
	Color TIFF Compression (page 8-23)		
	Default Screen (page 8-23)		
	New Destination Entry (page 8-23)		
	Recall Destination (page 8-23)		
Document Box	Custom Box (page 5-43)		
	Sub Address Box (Refer to **FAX System 11 Operation Guide**.)		
	Job Box	Quick Copy Job Retention (page 8-24)	
		Deletion of Job Retention (page 8-24)	
		Storage Media (page 8-24)	
	Polling Box (Refer to **FAX System 11 Operation Guide**.)		
FAX (Refer to FAX System 11 Operation Guide.)			
Application (page 5-13)			
Internet	Proxy (page 8-25)		
Address Book/One Touch	Address Book (page 3-22)		
	One Touch Key (page 3-27)		
	Address Book Defaults	Sort (page 8-25)	
		Address Book (page 8-25)	
	Print List (Refer to **FAX System 11 Operation Guide**.)		
User Login/Job Accounting	**User Login Settings**	User Login (page 9-3)	
		Local User List (page 9-5)	
		ID Card Settings	Keyboard Login (page 9-28)
			Additional Authentication (page 9-28)
			PIN Login(page 9-29)
		Simple login settings	Simple Login (page 9-25)
			Simple Login Setup (page 9-25)
		Local User Authorization (page 9-16)	
		User Account Lockout Settings	Lockout (page 9-4)
			Lockout Policy (page 9-4)
			Locked out Users List (page 9-4)
		Group Authorization Set.	Group Authorization (page 9-17)
			Group List (page 9-18)
		Guest Authorization Set.	Guest Authorization (page 9-20)
			Guest Property (page 9-21)
		Obtain NW User Property (page 9-23)	

User Login/Job Accounting	**Job Accounting Settings**	Job Accounting (page 9-32)	
		Job Accounting Access (page 9-33)	
		Print Accounting Report (page 9-44)	
		Total Job Accounting (page 9-43)	
		Each Job Accounting (page 9-43)	
		Accounting List (page 9-34)	
		Default Setting	Apply Limit (page 9-42)
			Copy/Printer Count (page 9-42)
			Default Counter Limit (page 9-42)
	Unknown ID Job (page 9-46)		
Printer	Emulation (page 8-26)		
	Color Setting (page 8-26)		
	EcoPrint (page 8-26)		
	Override A4/Letter (page 8-26)		
	Duplex (page 8-26)		
	Copies (page 8-26)		
	Orientation (page 8-26)		
	Wide A4 (page 8-27)		
	Form Feed TimeOut (page 8-27)		
	LF Action (page 8-27)		
	CR Action (page 8-27)		
	Job Name (page 8-27)		
	User Name (page 8-27)		
	MP Tray Priority (page 8-27)		
	Paper Feed Mode (page 8-27)		
	Auto cassette Change (page 8-28)		
	Gloss Mode (page 8-28)		

System/Network	**Network**	Host Name (page 8-29)	
		TCP/IP Settings	TCP/IP (page 8-29)
			IPv4 Settings (page 8-29)
			IPv6 Settings (page 8-30)
			Bonjour (page 8-30)
			Protocol Detail (page 8-31)
		WSD Scan (page 8-32)	
		WSD Print (page 8-32)	
		Enhanced WSD (page 8-32)	
		Enhanced WSD (SSL) (page 8-33)	
		IPSec (page 8-33)	
		Secure Protocol	SSL (page 8-33)
			IPP Security (page 8-33)
			HTTP Security (page 8-33)
			SMTP Security (page 8-33)
			POP3 Security (User 1) (page 8-33)
			POP3 Security (User 2) (page 8-33)
			POP3 Security (User 3) (page 8-33)
		LAN Interface (page 8-33)	
		Ping (page 8-34)	
		Restart Network (page 8-34)	
		Proxy (page 8-34)	
	Optional Network	Basic (page 8-35)	
	Wireless Network	Setup (page 8-35)	
		Basic (page 8-35)	
	Network Interface (Send) (page 8-36)		
	Interface Block Setting	USB Host (page 8-37)	
		USB Device (page 8-37)	
		USB Storage (page 8-37)	
		Optional Interface 1 (page 8-37)	
		Optional Interface 2 (page 8-37)	

System/Network	Security Level (page 8-37)	
	Restart (page 8-37)	
	RAM Disk Setting (page 8-38)	
	Optional Memory (page 8-38)	
	Data Security (page 8-39)	
	Optional Function (page 11-6)	
Date/Timer/Energy Saver	Date/Time (page 8-40)	
	Date Format (page 8-40)	
	Time Zone (page 8-40)	
	Auto Panel Reset (page 8-40)	
	Panel Reset Timer (page 8-40)	
	Low Power Timer (page 8-40)	
	Sleep Rules (models for Europe) (page 8-41)	
	Sleep Level (models except for Europe) (page 8-41)	
	Sleep Timer (page 8-41)	
	Auto Error Clear (page 8-41)	
	Error Clear Timer (page 8-41)	
	Interrupt Clear Timer (page 8-41)	
	Unusable Time (Refer to **FAX System 11 Operation Guide**.)	
	Ping Timeout (page 8-41)	
Adjustment/ Maintenance	**Quiet Mode Settings**	Quiet Mode (page 8-42)
		Specify for Each Job (page 8-42)
	Density Adjustment	Copy (page 8-42)
		Send/Box (page 8-42)
	Contrast	Copy (page 8-42)
		Send/Box (page 8-42)
	Background Density Adj.	Copy (Auto) (page 8-42)
		Send/Box (Auto) (page 8-42)
	Auto Color Correction (page 8-42)	
	Correcting Black Line (page 8-42)	
	Display Brightness (page 8-42)	
	Color Registration (page 8-42)	
	Calibration Cycle (page 8-43)	
	Tone Curve Adjustment (page 8-43)	
	Drum Refresh (page 8-43)	
	Calibration (page 8-43)	
	Laser Scanner Cleaning (page 8-43)	
	Service Setting (page 8-43)	

1 Legal and Safety Information

Please read this information before using your machine. This chapter provides information on the following topics.

Notice 1-2
Safety Conventions in This Guide 1-2
Environment 1-3
Precautions for Use 1-4
Laser Safety (Europe) 1-5
Legal Restriction on Copying/Scanning 1-6
EN ISO 7779 1-6
EK1-ITB 2000 1-6
Legal Information 1-7
Energy Saving Control Function 1-13
Automatic 2-Sided Print Function 1-13
Resource Saving - Paper 1-13
Environmental benefits of "Power Management" 1-13
Energy Star (ENERGY STAR®) Program 1-14

Notice

Safety Conventions in This Guide

The sections of this guide and parts of the machine marked with symbols are safety warnings meant to protect the user, other individuals and surrounding objects, and ensure correct and safe usage of the machine. The symbols and their meanings are indicated below.

WARNING: Indicates that serious injury or even death may result from insufficient attention to or incorrect compliance with the related points.

CAUTION: Indicates that personal injury or mechanical damage may result from insufficient attention to or incorrect compliance with the related points.

Symbols

The △ symbol indicates that the related section includes safety warnings. Specific points of attention are indicated inside the symbol.

... [General warning]

... [Warning of high temperature]

The ⃠ symbol indicates that the related section includes information on prohibited actions. Specifics of the prohibited action are indicated inside the symbol.

... [Warning of prohibited action]

... [Disassembly prohibited]

The ● symbol indicates that the related section includes information on actions which must be performed. Specifics of the required action are indicated inside the symbol.

... [Alert of required action]

... [Remove the power plug from the outlet]

... [Always connect the machine to an outlet with a ground connection]

Please contact your service representative to order a replacement if the safety warnings in this Operation Guide are illegible or if the guide itself is missing (fee required).

NOTE
An original which resembles a bank note closely may not be copied properly in some rare cases because this machine is equipped with a counterfeiting prevention function.

Environment

The service environmental conditions are as follows:

Temperature	50 to 90.5 °F (10 to 32.5 °C) (But humidity should be 70% or less when temperature is 90.5 °F (32.5 °C).)
Humidity	10 to 80% (But temperature should be 86 °F (30 °C) or less when humidity is 80%.)

Avoid the following locations when selecting a site for the machine.

- Avoid locations near a window or with exposure to direct sunlight.
- Avoid locations with vibrations.
- Avoid locations with drastic temperature fluctuations.
- Avoid locations with direct exposure to hot or cold air.
- Avoid poorly ventilated locations.

If the floor is delicate against casters, when this machine is moved after installation, the floor material may be damaged.

During copying, some ozone is released, but the amount does not cause any ill effect to one's health. If, however, the machine is used over a long period of time in a poorly ventilated room or when making an extremely large number of copies, the smell may become unpleasant. To maintain the appropriate environment for copy work, it is suggested that the room be properly ventilated.

Precautions for Use

Cautions when handling consumables

CAUTION

Do not attempt to incinerate parts which contain toner. Dangerous sparks may cause burns.

Keep parts which contain toner out of the reach of children.

If toner happens to spill from parts which contain toner, avoid inhalation and ingestion, as well as contact with your eyes and skin.

- If you do happen to inhale toner, move to a place with fresh air and gargle thoroughly with a large amount of water. If coughing develops, contact a physician.
- If you do happen to ingest toner, rinse your mouth with water and drink 1 or 2 cups of water to dilute the contents of your stomach. If necessary, contact a physician.
- If you do happen to get toner in your eyes, flush them thoroughly with water. If there is any remaining tenderness, contact a physician.
- If toner does happen to get on your skin, wash with soap and water.

Do not attempt to force open or destroy parts which contain toner.

Other precautions

Return the exhausted toner container and waste toner box to your dealer or service representative. The collected toner container and waste toner box will be recycled or disposed in accordance with the relevant regulations.

Store the machine while avoiding exposure to direct sunlight.

Store the machine in a place where the temperature stays below 40 °C while avoiding sharp changes of temperature and humidity.

If the machine will not be used for an extended period of time, remove the paper from the cassette and the Multi Purpose (MP) Tray, return it to its original package and reseal it.

Laser Safety (Europe)

Laser radiation could be hazardous to the human body. For this reason, laser radiation emitted inside this machine is hermetically sealed within the protective housing and external cover. In the normal operation of the product by user, no radiation can leak from the machine.

This machine is classified as Class 1 laser product under IEC/EN 60825-1:2007.

Caution: Performance of procedures other than those specified in this manual may result in hazardous radiation exposure.

These labels are attached to the laser scanner unit inside the machine and are not in a user access area.



Regarding CLASS 1 laser products, information is provided on the rating label.

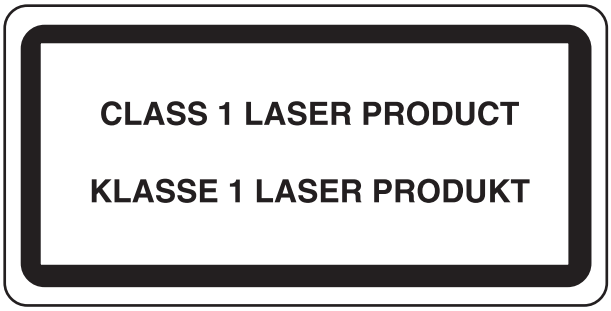

Legal Restriction on Copying/Scanning

It may be prohibited to copy/scan copyrighted material without permission of the copyright owner.

Copying/Scanning the following items is prohibited and may be penalized by low. It may not be limited to these items. Do not knowingly copy/scan the items that are not to be copied/scanned.

- Paper money
- Bank note
- Securities
- Stamp
- Passport
- Certificate

Local laws and regulations may prohibit or restrict copying/scanning of other items not mentioned above.

EN ISO 7779

Maschinenlärminformations-Verordnung 3. GPSGV, 06.01.2004: Der höchste Schalldruckpegel beträgt 70 dB (A) oder weniger gemäß EN ISO 7779.

EK1-ITB 2000

Das Gerät ist nicht für die Benutzung im unmittelbaren Gesichtsfeld am Bildschirmarbeitsplatz vorgesehen. Um störende Reflexionen am Bildschirmarbeitsplatz zu vermeiden, darf dieses Produkt nicht im unmittelbaren Gesichtsfeld platziert werden.

Legal Information

Copying or other reproduction of all or part of this guide without the prior written consent of KYOCERA Document Solutions Inc. is prohibited.

Regarding Trade Names

- PRESCRIBE is registered trademark of Kyocera Corporation.
- KPDL is a trademark of Kyocera Corporation.
- TASKalfa is registered trademarks or trademarks of KYOCERA Document Solutions Inc.
- Microsoft, Windows, Windows XP, Windows Server 2003, Windows Vista, Windows Server 2008, Windows 7, Windows Server 2012, Windows 8, Windows 8.1 and Internet Explorer are registered trademarks or trademarks of Microsoft Corporation in the U.S.A. and/or other countries.
- PCL is a trademark of Hewlett-Packard Company.
- Adobe Acrobat, Adobe Reader and PostScript are trademarks of Adobe Systems, Incorporated.
- Ethernet is a registered trademark of Xerox Corporation.
- IBM and IBM PC/AT are trademarks of International Business Machines Corporation.
- AppleTalk, Bonjour, Macintosh, and Mac OS are trademarks of Apple Inc., registered in the U.S. and other countries.
- All European language fonts installed in this machine are used under licensing agreement with Monotype Imaging Inc.
- Helvetica, Palatino and Times are registered trademarks of Linotype GmbH.
- ITC Avant Garde Gothic, ITC Bookman, ITC ZapfChancery and ITC ZapfDingbats are registered trademarks of International Typeface Corporation.
- ThinPrint is a trademark of Cortado AG in Germany and other countries.
- UFST™ MicroType® fonts by Monotype Imaging Inc. are installed in this machine.
- This machine contains the software having modules developed by Independent JPEG Group.
- This product contains NetFront Browser of ACCESS CO., LTD.
- ACCESS, ACCESS logo and NetFront are trademarks or registered trademarks of ACCESS CO., LTD. in the United States, Japan and other countries.
- © 2011 ACCESS CO., LTD. All rights reserved.
- Java is a registered trademark of Oracle and/or its affiliates.
- iPad, iPhone and iPod touch are trademarks of Apple Inc., registered in the U.S. and other countries.
- AirPrint and the AirPrint logo are trademarks of Apple Inc.
- iOS is a trademark or registered trademark of Cisco in the U.S. and other countries and is used under license by Apple Inc.
- Google and Google Cloud Print™ are trademarks and/or registered trademarks of Google Inc.
- Mopria™ is registered trademarks of Mopria™ Alliance.

All other brands and product names are registered trademarks or trademarks of their respective companies. The designations ™ and ® will not be used in this Operation Guide.

GPL/LGPL

This product contains GPL (http://www.gnu.org/licenses/gpl.html) and/or LGPL (http://www.gnu.org/licenses/lgpl.html) software as part of its firmware. You can get the source code, and you are permitted to copy, redistribute and modify it under the terms of GPL/LGPL. For further information including availability of the source code, visit http://www.kyoceradocumentsolutions.com/gpl/.

OpenSSL License

Copyright (c) 1998-2006 The OpenSSL Project. All rights reserved.

Redistribution and use in source and binary forms, with or without modification, are permitted provided that the following conditions are met:

1. Redistributions of source code must retain the above copyright notice, this list of conditions and the following disclaimer.
2. Redistributions in binary form must reproduce the above copyright notice, this list of conditions and the following disclaimer in the documentation and/or other materials provided with the distribution.
3. All advertising materials mentioning features or use of this software must display the following acknowledgment: "This product includes software developed by the OpenSSL Project for use in the OpenSSL Toolkit. (http://www.openssl.org/)"
4. The names "OpenSSL Toolkit" and "OpenSSL Project" must not be used to endorse or promote products derived from this software without prior written permission.
   For written permission, please contact openssl-core@openssl.org.
5. Products derived from this software may not be called "OpenSSL" nor may "OpenSSL" appear in their names without prior written permission of the OpenSSL Project.
6. Redistributions of any form whatsoever must retain the following acknowledgment: "This product includes software developed by the OpenSSL Project for use in the OpenSSL Toolkit (http://www.openssl.org/)"

THIS SOFTWARE IS PROVIDED BY THE OpenSSL PROJECT "AS IS" AND ANY EXPRESSED OR IMPLIED WARRANTIES, INCLUDING, BUT NOT LIMITED TO, THE IMPLIED WARRANTIES OF MERCHANTABILITY AND FITNESS FOR A PARTICULAR PURPOSE ARE DISCLAIMED. IN NO EVENT SHALL THE OpenSSL PROJECT OR ITS CONTRIBUTORS BE LIABLE FOR ANY DIRECT, INDIRECT, INCIDENTAL, SPECIAL, EXEMPLARY, OR CONSEQUENTIAL DAMAGES (INCLUDING, BUT NOT LIMITED TO, PROCUREMENT OF SUBSTITUTE GOODS OR SERVICES; LOSS OF USE, DATA, OR PROFITS; OR BUSINESS INTERRUPTION) HOWEVER CAUSED AND ON ANY THEORY OF LIABILITY, WHETHER IN CONTRACT, STRICT LIABILITY, OR TORT (INCLUDING NEGLIGENCE OR OTHERWISE) ARISING IN ANY WAY OUT OF THE USE OF THIS SOFTWARE, EVEN IF ADVISED OF THE POSSIBILITY OF SUCH DAMAGE.

Original SSLeay License

Copyright (C) 1995-1998 Eric Young (eay@cryptsoft.com) All rights reserved.

This package is an SSL implementation written by Eric Young (eay@cryptsoft.com). The implementation was written so as to conform with Netscapes SSL.

This library is free for commercial and non-commercial use as long as the following conditions are adhered to. The following conditions apply to all code found in this distribution, be it the RC4, RSA, lhash, DES, etc., code; not just the SSL code. The SSL documentation included with this distribution is covered by the same copyright terms except that the holder is Tim Hudson (tjh@cryptsoft.com).

Copyright remains Eric Young's, and as such any Copyright notices in the code are not to be removed.

If this package is used in a product, Eric Young should be given attribution as the author of the parts of the library used.

This can be in the form of a textual message at program startup or in documentation (online or textual) provided with the package.

Redistribution and use in source and binary forms, with or without modification, are permitted provided that the following conditions are met:

1. Redistributions of source code must retain the copyright notice, this list of conditions and the following disclaimer.
2. Redistributions in binary form must reproduce the above copyright notice, this list of conditions and the following disclaimer in the documentation and/or other materials provided with the distribution.
3. All advertising materials mentioning features or use of this software must display the following acknowledgement:
   "This product includes cryptographic software written by Eric Young (eay@cryptsoft.com)"
   The word 'cryptographic' can be left out if the routines from the library being used are not cryptographic related :-).
4. If you include any Windows specific code (or a derivative thereof) from the apps directory (application code) you must include an acknowledgement: "This product includes software written by Tim Hudson (tjh@cryptsoft.com)"

THIS SOFTWARE IS PROVIDED BY ERIC YOUNG "AS IS" AND ANY EXPRESS OR IMPLIED WARRANTIES, INCLUDING, BUT NOT LIMITED TO, THE IMPLIED WARRANTIES OF MERCHANTABILITY AND FITNESS FOR A PARTICULAR PURPOSE ARE DISCLAIMED. IN NO EVENT SHALL THE AUTHOR OR CONTRIBUTORS BE LIABLE FOR ANY DIRECT, INDIRECT, INCIDENTAL, SPECIAL, EXEMPLARY, OR CONSEQUENTIAL DAMAGES (INCLUDING, BUT NOT LIMITED TO, PROCUREMENT OF SUBSTITUTE GOODS OR SERVICES; LOSS OF USE, DATA, OR PROFITS; OR BUSINESS INTERRUPTION) HOWEVER CAUSED AND ON ANY THEORY OF LIABILITY, WHETHER IN CONTRACT, STRICT LIABILITY, OR TORT (INCLUDING NEGLIGENCE OR OTHERWISE) ARISING IN ANY WAY OUT OF THE USE OF THIS SOFTWARE, EVEN IF ADVISED OF THE POSSIBILITY OF SUCH DAMAGE.

The licence and distribution terms for any publically available version or derivative of this code cannot be changed. i.e. this code cannot simply be copied and put under another distribution licence [including the GNU Public Licence.]

Monotype Imaging License Agreement

1 *Software* shall mean the digitally encoded, machine readable, scalable outline data as encoded in a special format as well as the UFST Software.

2 You agree to accept a non-exclusive license to use the Software to reproduce and display weights, styles and versions of letters, numerals, characters and symbols (*Typefaces*) solely for your own customary business or personal purposes at the address stated on the registration card you return to Monotype Imaging. Under the terms of this License Agreement, you have the right to use the Fonts on up to three printers. If you need to have access to the fonts on more than three printers, you need to acquire a multiuser license agreement which can be obtained from Monotype Imaging. Monotype Imaging retains all rights, title and interest to the Software and Typefaces and no rights are granted to you other than a License to use the Software on the terms expressly set forth in this Agreement.

3 To protect proprietary rights of Monotype Imaging, you agree to maintain the Software and other proprietary information concerning the Typefaces in strict confidence and to establish reasonable procedures regulating access to and use of the Software and Typefaces.

4 You agree not to duplicate or copy the Software or Typefaces, except that you may make one backup copy. You agree that any such copy shall contain the same proprietary notices as those appearing on the original.

5 This License shall continue until the last use of the Software and Typefaces, unless sooner terminated. This License may be terminated by Monotype Imaging if you fail to comply with the terms of this License and such failure is not remedied within thirty (30) days after notice from Monotype Imaging. When this License expires or is terminated, you shall either return to Monotype Imaging or destroy all copies of the Software and Typefaces and documentation as requested.

6 You agree that you will not modify, alter, disassemble, decrypt, reverse engineer or decompile the Software.

7 Monotype Imaging warrants that for ninety (90) days after delivery, the Software will perform in accordance with Monotype Imaging-published specifications, and the diskette will be free from defects in material and workmanship. Monotype Imaging does not warrant that the Software is free from all bugs, errors and omissions.

The parties agree that all other warranties, expressed or implied, including warranties of fitness for a particular purpose and merchantability, are excluded.

8 Your exclusive remedy and the sole liability of Monotype Imaging in connection with the Software and Typefaces is repair or replacement of defective parts, upon their return to Monotype Imaging.

In no event will Monotype Imaging be liable for lost profits, lost data, or any other incidental or consequential damages, or any damages caused by abuse or misapplication of the Software and Typefaces.

9 Massachusetts U.S.A. law governs this Agreement.

10 You shall not sublicense, sell, lease, or otherwise transfer the Software and/or Typefaces without the prior written consent of Monotype Imaging.

11 Use, duplication or disclosure by the Government is subject to restrictions as set forth in the Rights in Technical Data and Computer Software clause at FAR 252-227-7013, subdivision (b)(3)(ii) or subparagraph (c)(1)(ii), as appropriate. Further use, duplication or disclosure is subject to restrictions applicable to restricted rights software as set forth in FAR 52.227-19 (c)(2).

12 You acknowledge that you have read this Agreement, understand it, and agree to be bound by its terms and conditions. Neither party shall be bound by any statement or representation not contained in this Agreement. No change in this Agreement is effective unless written and signed by properly authorized representatives of each party. By opening this diskette package, you agree to accept the terms and conditions of this Agreement.

Knopflerfish License

This product includes software developed by the Knopflerfish Project.
http://www.knopflerfish.org

Copyright 2003-2010 The Knopflerfish Project. All rights reserved.

Redistribution and use in source and binary forms, with or without modification, are permitted provided that the following conditions are met:

- Redistributions of source code must retain the above copyright notice, this list of conditions and the following disclaimer.
- Redistributions in binary form must reproduce the above copyright notice, this list of conditions and the following disclaimer in the documentation and/or other materials provided with the distribution.
- Neither the name of the KNOPFLERFISH project nor the names of its contributors may be used to endorse or promote products derived from this software without specific prior written permission.

THIS SOFTWARE IS PROVIDED BY THE COPYRIGHT HOLDERS AND CONTRIBUTORS "AS IS" AND ANY EXPRESS OR IMPLIED WARRANTIES, INCLUDING, BUT NOT LIMITED TO, THE IMPLIED WARRANTIES OF MERCHANTABILITY AND FITNESS FOR A PARTICULAR PURPOSE ARE DISCLAIMED. IN NO EVENT SHALL THE COPYRIGHT OWNER OR CONTRIBUTORS BE LIABLE FOR ANY DIRECT, INDIRECT, INCIDENTAL, SPECIAL, EXEMPLARY, OR CONSEQUENTIAL DAMAGES (INCLUDING, BUT NOT LIMITED TO, PROCUREMENT OF SUBSTITUTE GOODS OR SERVICES; LOSS OF USE, DATA, OR PROFITS; OR BUSINESS INTERRUPTION) HOWEVER CAUSED AND ON ANY THEORY OF LIABILITY, WHETHER IN CONTRACT, STRICT LIABILITY, OR TORT (INCLUDING NEGLIGENCE OR OTHERWISE) ARISING IN ANY WAY OUT OF THE USE OF THIS SOFTWARE, EVEN IF ADVISED OF THE POSSIBILITY OF SUCH DAMAGE.

Apache License (Version 2.0)

Apache License
Version 2.0, January 2004
http://www.apache.org/licenses/

TERMS AND CONDITIONS FOR USE, REPRODUCTION, AND DISTRIBUTION

1. Definitions.

   "License" shall mean the terms and conditions for use, reproduction, and distribution as defined by Sections 1 through 9 of this document.

   "Licensor" shall mean the copyright owner or entity authorized by the copyright owner that is granting the License.

   "Legal Entity" shall mean the union of the acting entity and all other entities that control, are controlled by, or are under common control with that entity. For the purposes of this definition, "control" means (i) the power, direct or indirect, to cause the direction or management of such entity, whether by contract or otherwise, or (ii) ownership of fifty percent (50%) or more of the outstanding shares, or (iii) beneficial ownership of such entity.

   "You" (or "Your") shall mean an individual or Legal Entity exercising permissions granted by this License.

   "Source" form shall mean the preferred form for making modifications, including but not limited to software source code, documentation source, and configuration files.

"Object" form shall mean any form resulting from mechanical transformation or translation of a Source form, including but not limited to compiled object code, generated documentation, and conversions to other media types.

"Work" shall mean the work of authorship, whether in Source or Object form, made available under the License, as indicated by a copyright notice that is included in or attached to the work (an example is provided in the Appendix below).

"Derivative Works" shall mean any work, whether in Source or Object form, that is based on (or derived from) the Work and for which the editorial revisions, annotations, elaborations, or other modifications represent, as a whole, an original work of authorship. For the purposes of this License, Derivative Works shall not include works that remain separable from, or merely link (or bind by name) to the interfaces of, the Work and Derivative Works thereof.

"Contribution" shall mean any work of authorship, including the original version of the Work and any modifications or additions to that Work or Derivative Works thereof, that is intentionally submitted to Licensor for inclusion in the Work by the copyright owner or by an individual or Legal Entity authorized to submit on behalf of the copyright owner. For the purposes of this definition, "submitted" means any form of electronic, verbal, or written communication sent to the Licensor or its representatives, including but not limited to communication on electronic mailing lists, source code control systems, and issue tracking systems that are managed by, or on behalf of, the Licensor for the purpose of discussing and improving the Work, but excluding communication that is conspicuously marked or otherwise designated in writing by the copyright owner as "Not a Contribution."

"Contributor" shall mean Licensor and any individual or Legal Entity on behalf of whom a Contribution has been received by Licensor and subsequently incorporated within the Work.

2. Grant of Copyright License. Subject to the terms and conditions of this License, each Contributor hereby grants to You a perpetual, worldwide, non-exclusive, no-charge, royalty-free, irrevocable copyright license to reproduce, prepare Derivative Works of, publicly display, publicly perform, sublicense, and distribute the Work and such Derivative Works in Source or Object form.
3. Grant of Patent License. Subject to the terms and conditions of this License, each Contributor hereby grants to You a perpetual, worldwide, non-exclusive, no-charge, royalty-free, irrevocable (except as stated in this section) patent license to make, have made, use, offer to sell, sell, import, and otherwise transfer the Work, where such license applies only to those patent claims licensable by such Contributor that are necessarily infringed by their Contribution(s) alone or by combination of their Contribution(s) with the Work to which such Contribution(s) was submitted. If You institute patent litigation against any entity (including a cross-claim or counterclaim in a lawsuit) alleging that the Work or a Contribution incorporated within the Work constitutes direct or contributory patent infringement, then any patent licenses granted to You under this License for that Work shall terminate as of the date such litigation is filed.
4. Redistribution. You may reproduce and distribute copies of the Work or Derivative Works thereof in any medium, with or without modifications, and in Source or Object form, provided that You meet the following conditions:

   (a)You must give any other recipients of the Work or Derivative Works a copy of this License; and

   (b)You must cause any modified files to carry prominent notices stating that You changed the files; and

   (c)You must retain, in the Source form of any Derivative Works that You distribute, all copyright, patent, trademark, and attribution notices from the Source form of the Work, excluding those notices that do not pertain to any part of the Derivative Works; and

   (d)If the Work includes a "NOTICE" text file as part of its distribution, then any Derivative Works that You distribute must include a readable copy of the attribution notices contained within such NOTICE file, excluding those notices that do not pertain to any part of the Derivative Works, in at least one of the following places: within a NOTICE text file distributed as part of the Derivative Works; within the Source form or documentation, if provided along with the Derivative Works; or, within a display generated by the Derivative Works, if and wherever such third-party notices normally appear. The contents of the NOTICE file are for informational purposes only and do not modify the License. You may add Your own attribution notices within Derivative Works that You distribute, alongside or as an addendum to the NOTICE text from the Work, provided that such additional attribution notices cannot be construed as modifying the License.

   You may add Your own copyright statement to Your modifications and may provide additional or different license terms and conditions for use, reproduction, or distribution of Your modifications, or for any such Derivative Works as a whole, provided Your use, reproduction, and distribution of the Work otherwise complies with the conditions stated in this License.

5. Submission of Contributions. Unless You explicitly state otherwise, any Contribution intentionally submitted for inclusion in the Work by You to the Licensor shall be under the terms and conditions of this License, without any additional terms or conditions. Notwithstanding the above, nothing herein shall supersede or modify the terms of any separate license agreement you may have executed with Licensor regarding such Contributions.
6. Trademarks. This License does not grant permission to use the trade names, trademarks, service marks, or product names of the Licensor, except as required for reasonable and customary use in describing the origin of the Work and reproducing the content of the NOTICE file.
7. Disclaimer of Warranty. Unless required by applicable law or agreed to in writing, Licensor provides the Work (and each Contributor provides its Contributions) on an "AS IS" BASIS, WITHOUT WARRANTIES OR CONDITIONS OF ANY KIND, either express or implied, including, without limitation, any warranties or conditions of TITLE, NON-INFRINGEMENT, MERCHANTABILITY, or FITNESS FOR A PARTICULAR PURPOSE. You are solely responsible for determining the appropriateness of using or redistributing the Work and assume any risks associated with Your exercise of permissions under this License.
8. Limitation of Liability. In no event and under no legal theory, whether in tort (including negligence), contract, or otherwise, unless required by applicable law (such as deliberate and grossly negligent acts) or agreed to in writing, shall any Contributor be liable to You for damages, including any direct, indirect, special, incidental, or consequential damages of any character arising as a result of this License or out of the use or inability to use the Work (including but not limited to damages for loss of goodwill, work stoppage, computer failure or malfunction, or any and all other commercial damages or losses), even if such Contributor has been advised of the possibility of such damages.
9. Accepting Warranty or Additional Liability. While redistributing the Work or Derivative Works thereof, You may choose to offer, and charge a fee for, acceptance of support, warranty, indemnity, or other liability obligations and/or rights consistent with this License. However, in accepting such obligations, You may act only on Your own behalf and on Your sole responsibility, not on behalf of any other Contributor, and only if You agree to indemnify, defend, and hold each Contributor harmless for any liability incurred by, or claims asserted against, such Contributor by reason of your accepting any such warranty or additional liability.

END OF TERMS AND CONDITIONS

APPENDIX: How to apply the Apache License to your work.

To apply the Apache License to your work, attach the following boilerplate notice, with the fields enclosed by brackets "[]" replaced with your own identifying information. (Don't include the brackets!) The text should be enclosed in the appropriate comment syntax for the file format. We also recommend that a file or class name and description of purpose be included on the same "printed page" as the copyright notice for easier identification within third-party archives.

Copyright [yyyy] [name of copyright owner]

Licensed under the Apache License, Version 2.0 (the "License"); you may not use this file except in compliance with the License. You may obtain a copy of the License at

http://www.apache.org/licenses/LICENSE-2.0

Unless required by applicable law or agreed to in writing, software distributed under the License is distributed on an "AS IS" BASIS, WITHOUT WARRANTIES OR CONDITIONS OF ANY KIND, either express or implied. See the License for the specific language governing permissions and limitations under the License.

Energy Saving Control Function

The device comes equipped with a Low Power Mode where energy consumption is reduced after a certain amount of time elapses since the device was last used, as well as a Sleep where printer and fax functions remain in a waiting state but power consumption is still reduced to a minimum when there is no activity with the device within a set amount of time.

Low Power Mode

The device automatically enters Low Power Mode when 3 minutes have passed since the device was last used. The amount of time of no activity that must pass before Low Power Mode is activated may be lengthened.

Low Power Mode (page 2-26)

Sleep

The device automatically enters Sleep when 20 minutes (models for Europe), or 30 minutes (models except for Europe) have passed since the device was last used. The amount of time of no activity that must pass before Sleep is activated may be lengthened.

Sleep (page 2-26)

Auto Power Off (models for Europe)

The device automatically turns its power off after the preset time has passed since the device was last used, when the device is not connected to any computers.

Automatic 2-Sided Print Function

This device includes 2-sided printing as a standard function. For example, by printing two 1-sided originals onto a single sheet of paper as a 2-sided print, it is possible to lower the amount of paper used.

Duplex (page 6-27)

Printing in duplex mode reduces paper consumption and contributes to the conservation of forest resources. Duplex mode also reduces the amount of paper that must be purchased, and thereby reduces cost. It is recommended that machines capable of duplex printing be set to use duplex mode by default.

Resource Saving - Paper

For the preservation and sustainable use of forest resources, it is recommended that recycled as well as virgin paper certified under environmental stewardship initiatives or carrying recognised ecolabels, which meet EN 12281:2002* or an equivalent quality standard, be used.

This machine also supports printing on 64 g/m^2 paper. Using such paper containing less raw materials can lead to further saving of forest resources.

* : EN12281:2002 "Printing and business paper - Requirements for copy paper for dry toner imaging processes"

Your sales or service representative can provide information about recommended paper types.

Environmental benefits of "Power Management"

To reduce power consumption when idle, this machine is equipped with a power management function that automatically activates energy-saving mode when the machine is idle for a certain period of time.
Although it takes the machine a slight amount of time to return to READY mode when in energy-saving mode, a significant reduction in energy consumption is possible. It is recommended that the machine be used with the activation time for energy-saving mode set to the default setting.

Energy Star (ENERGY STAR®) Program

We have determined as a participating company in the International Energy Star Program that this product is compliant with the standards laid out in the International Energy Star Program.

ENERGY STAR® is a voluntary energy efficiency program with the goal of developing and promoting the use of products with high energy efficiency in order to help prevent global warming. By purchasing ENERGY STAR® qualified products, customers can help reduce emissions of greenhouse gases during product use and cut energy-related costs.

2 Installing and Setting up the Machine

This chapter provides information for the administrator of this machine, such as part names, cable connection, and software installation.

Part Names (Machine Exterior) 2-2
Part Names (Connectors/Interior) 2-4
Part Names (With Optional Equipments Attached) 2-5
Connecting the Machine and Other Devices 2-6
Connecting Cables 2-7
- Connecting LAN Cable 2-7
- Connecting USB Cable 2-8
- Connecting the Power Cable 2-8

Power On/Off 2-9
- Power On 2-9
- Power Off 2-9

Using the Operation Panel 2-10
- Operation Panel Keys 2-10
- Adjusting the Operation Panel Angle 2-11

Touch Panel 2-12
- Home Screen 2-12
- Display for Device Information 2-16
- Functions key 2-17
- Display of Keys That Cannot Be Set 2-18
- Enter key and Quick No. Search key 2-19
- Help Screen 2-20

Login/Logout 2-21
- Login 2-21
- Logout 2-22

Default Settings of the Machine 2-23
- Setting Date and Time 2-23
- Network Setup (LAN Cable Connection) 2-24

Energy Saver function 2-26
- Low Power Mode 2-26
- Sleep 2-26
- Auto Sleep 2-27
- Sleep Rules (models for Europe) 2-27
- Sleep Level (Energy Saver and Quick Recovery) (models except for Europe) 2-27

Quick Setup Wizard 2-28
Installing Software 2-30
- Software on DVD (Windows) 2-30
- Installing Software in Windows 2-31
- Uninstalling the Software 2-37
- Installing Software in Mac Computer 2-38
- Setting TWAIN Driver 2-40
- Setting WIA Driver 2-42

Checking the Counter 2-43
Additional Preparations for the Administrator 2-44
- Sending Documents to a PC 2-44
- Strengthening the Security 2-44

Command Center RX 2-46
- Accessing Command Center RX 2-47
- Changing Security Settings 2-48
- Changing Device Information 2-50
- E-mail Settings 2-52
- Registering Destinations 2-56
- Creating a New Custom Box 2-57
- Printing a document stored in a Custom Box 2-58

Transferring Data from Our Other Products 2-60
- Migrating the Address Book 2-60

Part Names (Machine Exterior)

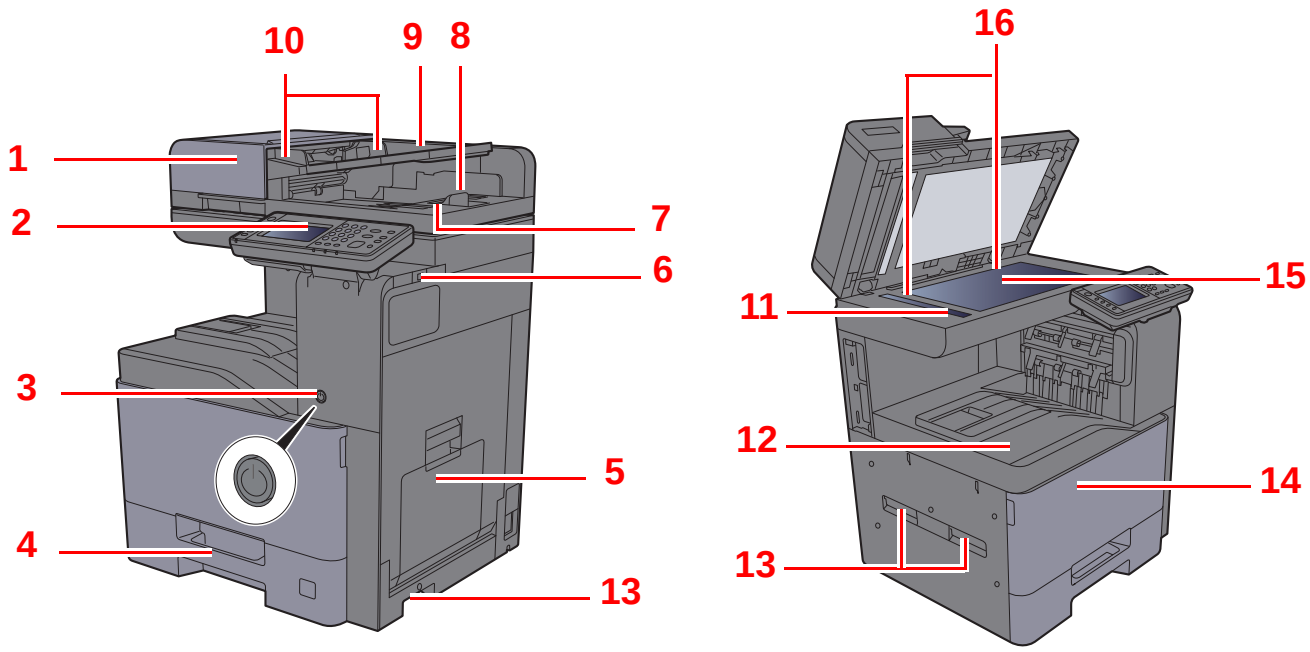

1 Document Processor
2 Operation Panel
3 Power Switch
4 Cassette 1
5 Multi Purpose Tray
6 USB Memory Slot
7 Original Eject Table
8 Original Stopper
9 Original Table
10 Original Width Guides
11 Slit Glass
12 Inner Tray
13 Handles
14 Front Cover
15 Platen
16 Original Size Indicator Plates

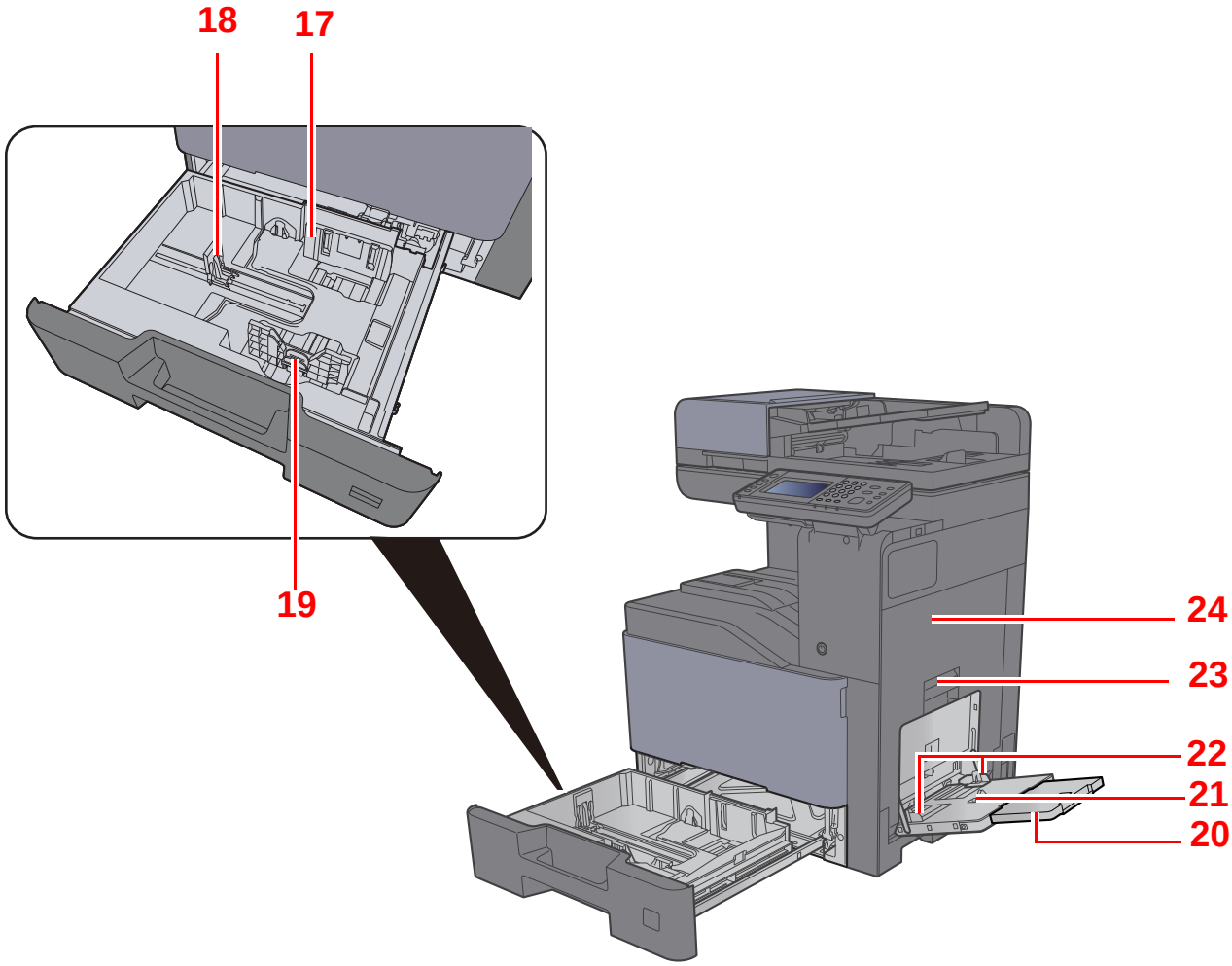

17 Paper Width Guide
18 Paper Length Guide
19 Paper Width Adjusting Tab
20 Support Tray Section of the Multi Purpose Tray
21 Multi Purpose Tray
22 Paper Width Guide
23 Right Cover 1 Lever
24 Right Cover 1

Part Names (Connectors/Interior)

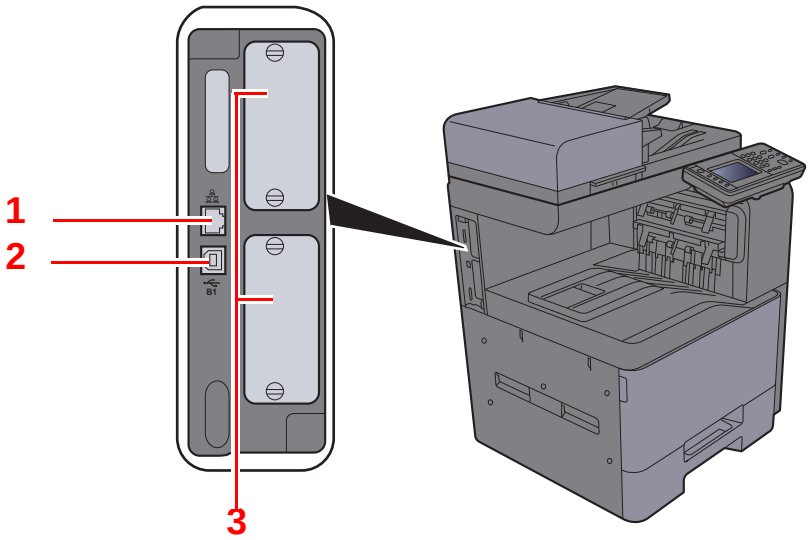

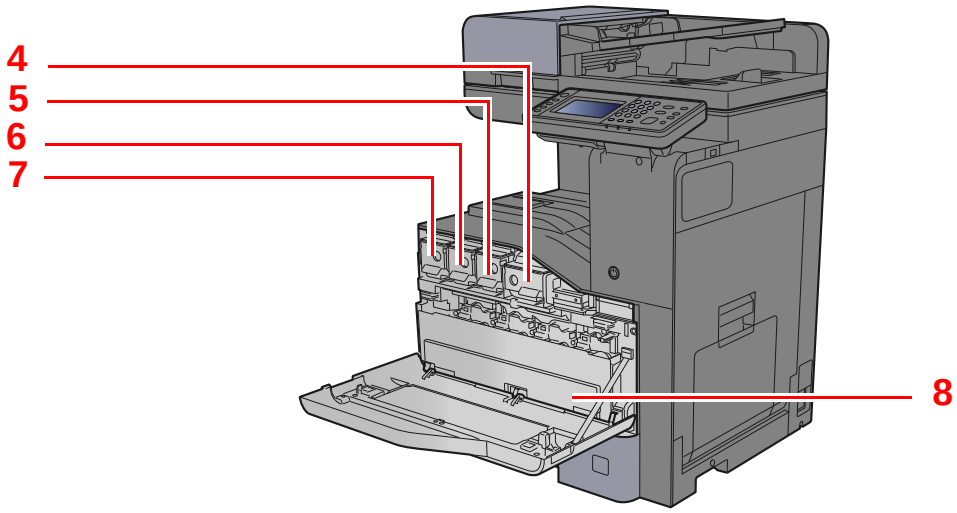

1 Network Interface Connector
2 USB Interface Connector
3 Option Interface Slot
4 Toner Container (Black)
5 Toner Container (Magenta)
6 Toner Container (Cyan)
7 Toner Container (Yellow)
8 Waste Toner Box

Part Names (With Optional Equipments Attached)

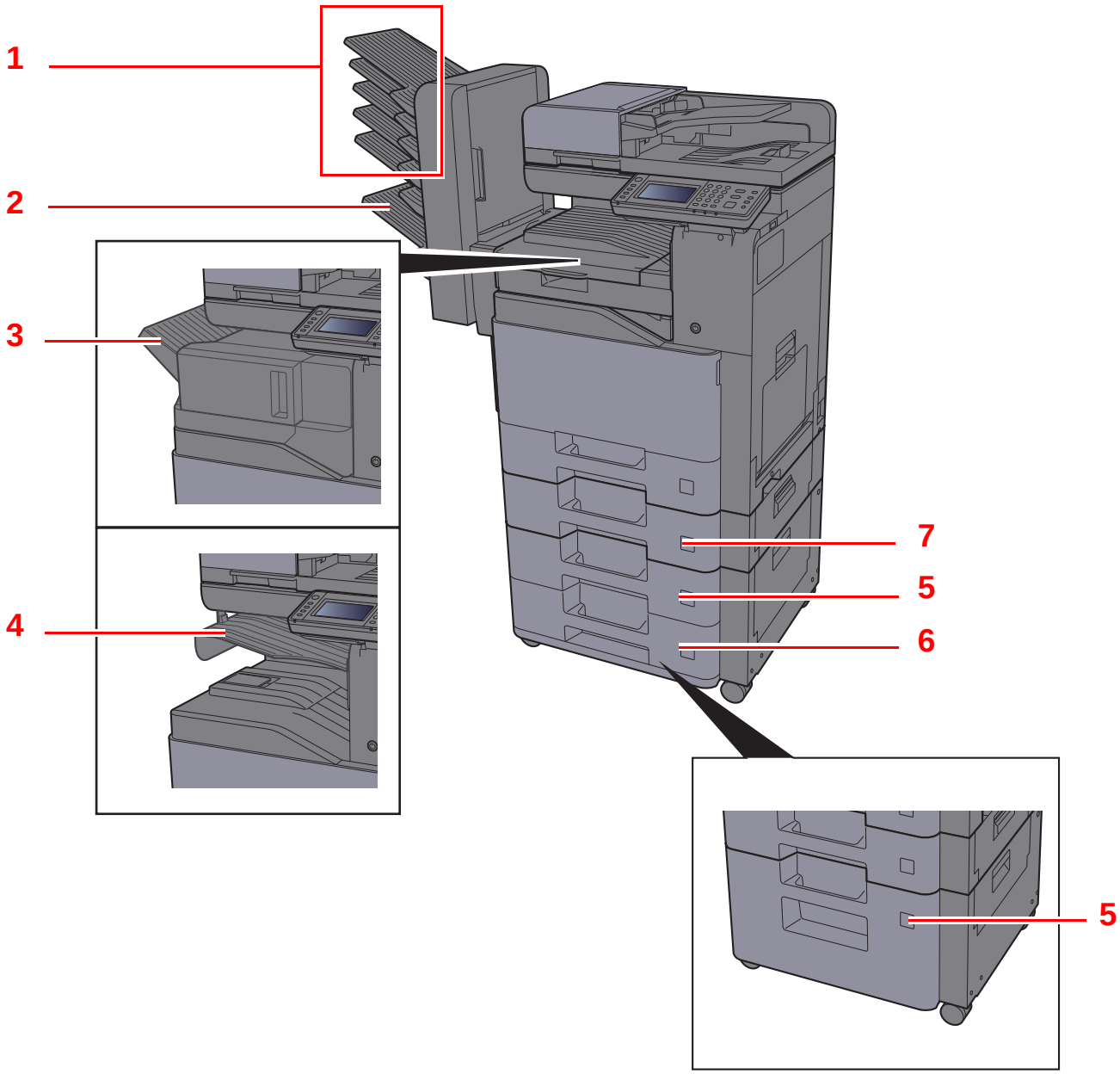

1 Tray 1 to 5 (tray 1 is the top tray)
2 Tray A
3 Finisher Tray
4 Job Separator Tray
5 Cassette 3
6 Cassette 4
7 Cassette 2

Optional Equipment (page 11-2)

Connecting the Machine and Other Devices

Prepare the cables necessary to suit the environment and purpose of the machine use.

When Connecting the Machine to the PC via USB

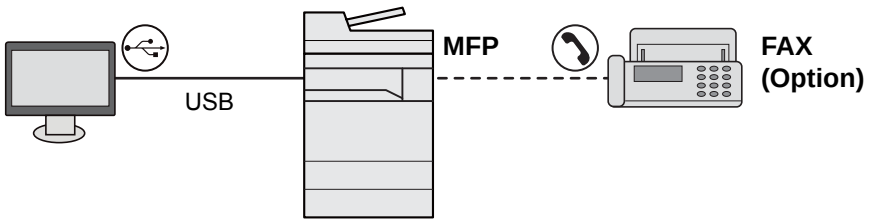

When Connecting the Machine to the PC on the Network

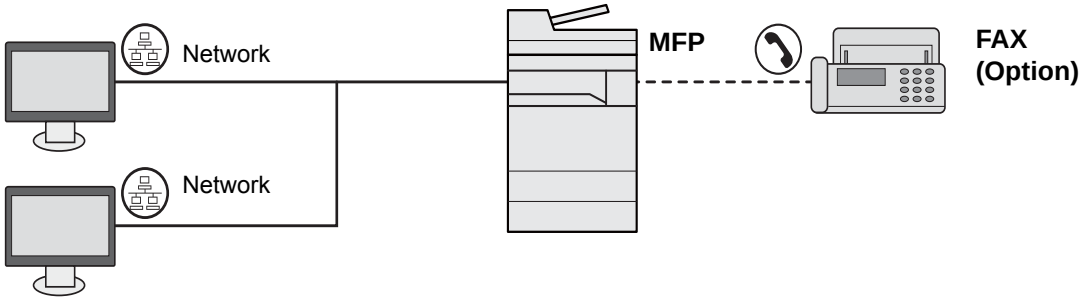

NOTE

If you are using the machine with the optional wireless interface kit attached, you do not need to connect the LAN cable. To use a wireless LAN, it is necessary to change the default settings for the machine using the System Menu.

Optional Network (page 8-35)

Cables that Can Be Used

Connection Environment	Function	Necessary Cable
Connect a LAN cable to the machine.	Printer/Scanner/Network FAX*1	LAN cable (10BASE-T, 100BASE-TX, 1000BASE-T)
Connect a USB cable to the machine.	Printer/Scanner (TWAIN/WIA)	USB2.0 compatible cable (Hi-Speed USB compliant, Max. 5.0 m)

*1 Only on products with the fax function installed.

Connecting Cables

Connecting LAN Cable

IMPORTANT

If the power is on, turn the power switch off.

Power Off (page 2-9)

1 Connect the cable to the machine.

1 Connect the LAN cable to the network interface connector.

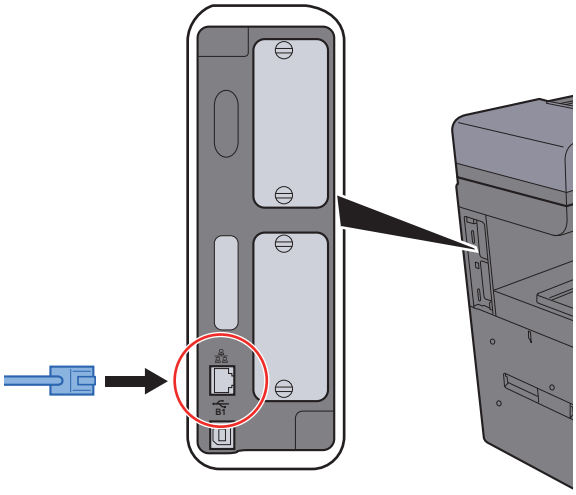

2 Connect the other end of the cable to the hub.

2 Power on the machine and configure the network.

Network Setup (LAN Cable Connection) (page 2-24)

Connecting USB Cable

IMPORTANT

If the power is on, turn the power switch off.

Power Off (page 2-9)

1 Connect the cable to the machine.

1 Connect the USB cable to the USB interface connector located on the left side of the body.

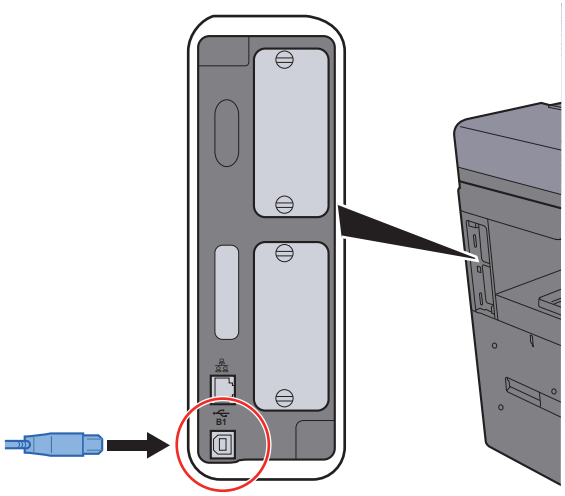

2 Connect the other end of the cable to the PC.

2 Power on the machine.

Connecting the Power Cable

1 Connect the cable to the machine.

Connect one end of the supplied power cable to the machine and the other end to a power outlet.

IMPORTANT

Only use the power cable that comes with the machine.

NOTE

When connecting the power cord to this machine, the touch panel may be displayed momentarily.

Power On/Off

Power On

1 Turn the power switch on.

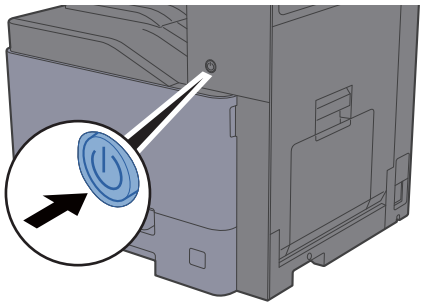

IMPORTANT

When turning off the power switch, do not turn on the power switch again immediately. Wait more than 5 seconds, and then turn on the power switch.

Power Off

IMPORTANT

When the [Processing] indicator or [Memory] indicator is lit up or blinked, the machine is operating. Turning off the power switch while the machine is operating may cause it to malfunction.

1 Turn the power switch off.

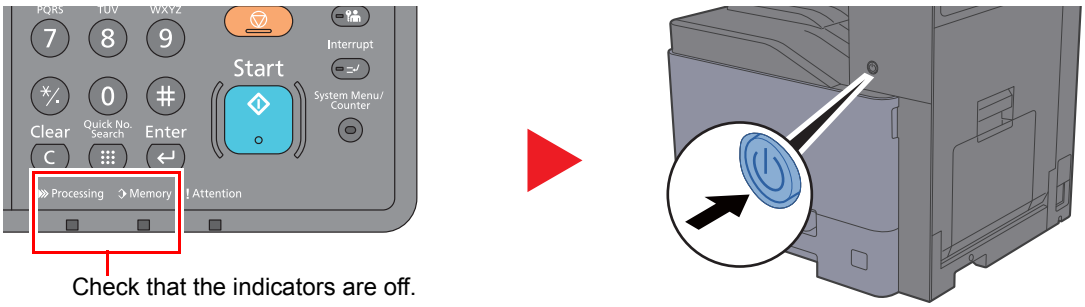

In case of not using the machine for an extended period of time...

CAUTION

If this machine will be left unused for an extended period (e.g. overnight), turn it off at the power switch. If the machine will not be used for an even longer period of time (e.g. vacation), remove the power plug from the outlet as a safety precaution.

IMPORTANT

If using the products equipped with the fax function, note that turning the machine off at the power switch disables fax transmission and reception. Remove paper from the cassettes and seal it in the paper storage bag to protect it from humidity.

Using the Operation Panel

Operation Panel Keys

Home	Displays the Home screen.	Status/ Job Cancel	Displays the Status/Job Cancel screen.	Send	Displays the screen for sending. You can change it to display the Address Book screen.
		Copy	Displays the Copy screen.	FAX	Displays the FAX screen.

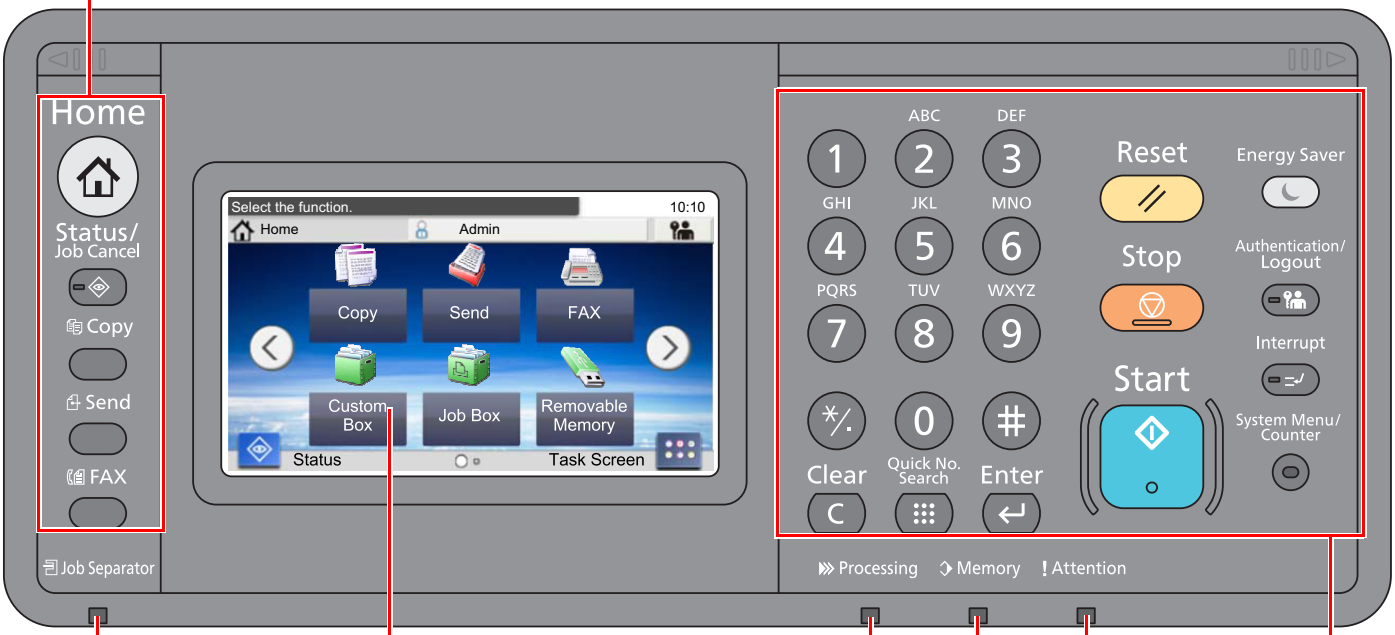

Lights when there is paper in the job separator tray.

Touch panel. Displays buttons for configuring machine settings.

Blinks while printing or sending/receiving.

Blinks while the machine is accessing the machine memory, fax memory or USB memory (general purpose item).

Lights or blinks when an error occurs and a job is stopped.

System Menu / Counter	Displays the System Menu/ Counter screen.	Authentication/ Logout	Authenticates user switching, and exits the operation for the current user (i.e. log out).	Energy Saver	Puts the machine into Sleep Mode. Recovers from Sleep if in Sleep Mode.
Numeric keys. Enter numbers and symbols.		Clear	Clears entered numbers and characters.	Reset	Returns settings to their default states.
		Quick No. Search	Specifies registered information such as address numbers and user IDs by number.	Stop	Cancels or pauses the job in progress.
Interrupt	Displays the Interrupt Copy screen.	Enter	Finalizes numeric key entry, and finalizes details during setting of functions. Operates linked with the on-screen [**OK**].	Start	Starts copying and scanning operations and processing for setting operations.

Adjusting the Operation Panel Angle

The angle of the operation panel can be adjusted.

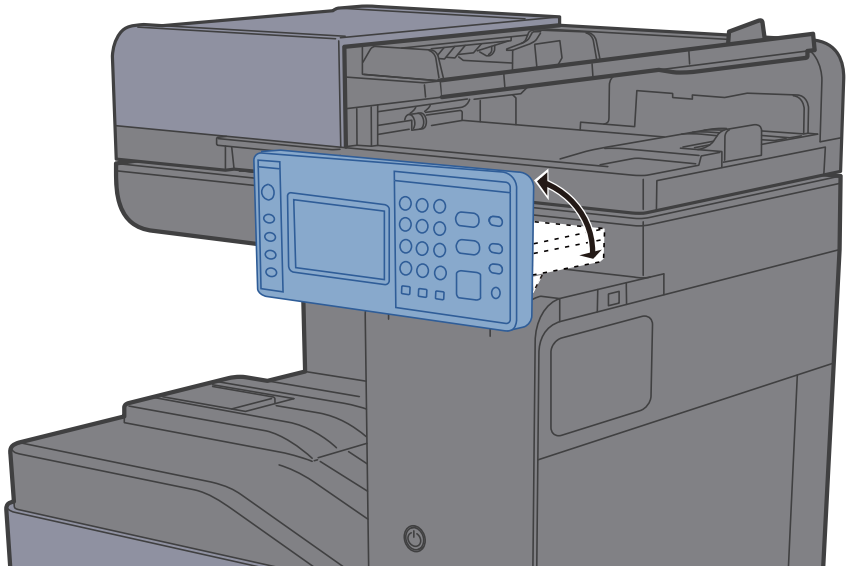

Touch Panel

Home Screen

This screen is displayed by selecting the [**Home**] key on the operation panel. Touching an icon will display the corresponding screen.

You can change the icons to display on the Home screen as well as its background.

Editing the Home Screen (page 2-13)

Desktop

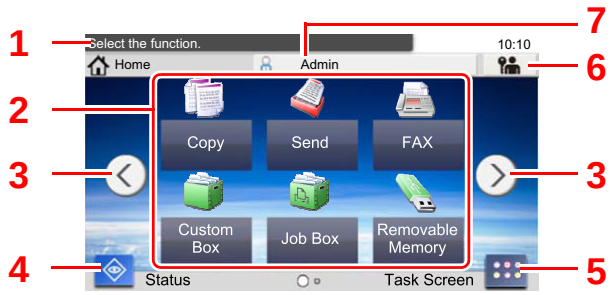

Task Screen

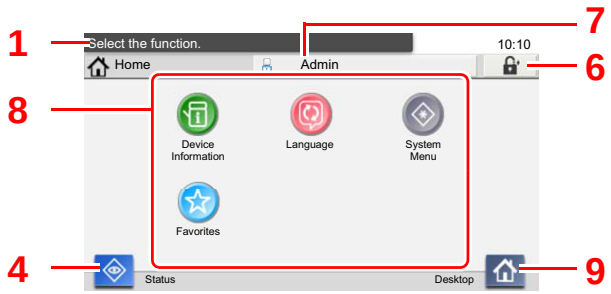

* The appearance may differ from your actual screen, depending on your configuration and option settings.

No.	Item	Description
1	Message	Displays the message depending on the status.
2	Desktop	Displays the function icon. Registered function to favorites are also displayed. Icons that are not displayed on the first page will appear by changing the page.
3	Screen-switching keys	Use these buttons to switch between desktop pages. **NOTE** You can also switch views by touching the screen and moving the finger sideways (i.e. swiping). 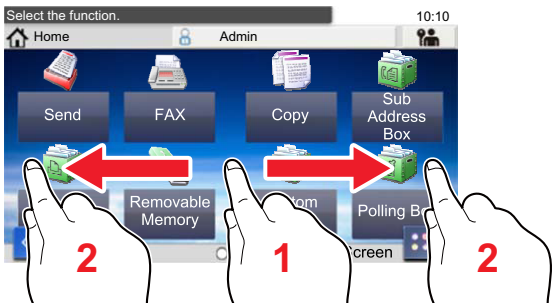
4	[**Status**]	Displays the Status screen. If an error occurs, the icon will show "!". Once the error clears, the display will return to normal.
5	[**Task Screen**]	Displays the Task Screen.
6	[**Logout**]	Logs out the current user. This is displayed when user login administration is enabled.
7	Login User Name	Displays the logged-in user name. This is displayed when user login administration is enabled. Selecting "Login User Name" will display the information of the logged-in user.
8	Task Screen	Displays the task icons.
9	[**Desktop**]	Displays the Desktop.

Editing the Home Screen

You can change the background of the Home screen as well as which icons are displayed.

1 Display the screen.

1 [**System Menu/Counter**] key > [**Home**]

> **NOTE**
>
> If the user authentication screen appears, enter your login user name and login password and select [**Login**]. For this, you need to login with administrator privileges. The factory default login user name and login password are set as shown below.
>
> **Login User Name:** **3000**
>
> **Login Password:** **3000**

2 Configure the settings.

The available settings are shown below.

Item	Description
Customize Desktop	Specify the function icons to display on the desktop.*1 Select [➕] to display the screen for selecting the function to display. Select the function to display and [**OK**]. Select an icon and [**Previous**] or [**After**] to change the display position of the selected icon on the Desktop. To delete an icon from desktop, select the desired one and select [🗑].
Customize Task Screen	Specify the task icons to display on the task screen.*2
Wallpaper	Configure the wallpaper of the Home screen. **Value**: Images 1 to 8

*1 Displays a maximum of 60 function icons including the installed applications and the functions that can be used when options are installed.

*2 4 task icons can be displayed.

Available Functions to Display on Desktop

Function	Icon	Description	Reference page
Copy[*1]		Displays the Copy screen.	page 5-18
Send[*1]		Displays the Send screen.	page 5-20
FAX[*2]		Displays the FAX screen.	Refer to **FAX System 11 Operation Guide**.
Custom Box[*3]		Displays the Custom Box screen.	page 5-41
Job Box[*1]		Displays the Job Box screen.	page 4-10
Removable Memory[*1]		Displays the Removable Memory screen.	page 5-48
Sub Address Box[*2]		Displays the Sub Address Box screen.	Refer to **FAX System 11 Operation Guide**.
Polling Box[*2]		Displays the Polling Box screen.	Refer to **FAX System 11 Operation Guide**.
Send to Me (E-mail)[*4]		Displays the Send screen. The E-mail address of the logged-in user is set as the destination.	page 5-33
Favorites		Calls up the registered favorite. The icon will change according to the function of the favorite.	page 5-8
Application Name[*5]		Displays the selected applications.	page 5-13

*1 Selected at the time of shipment from factory.
*2 Displayed only on products with the fax function installed.
*3 Displayed when the optional SSD is installed.
*4 Displayed when user login administration is enabled.
*5 The icon of the application appears.

Available Functions to Display on Task Screen

Function	Icon	Description	Reference page
Device Information		Displays the Device Information screen. Check the system and network information. You can also check information on the options that are used.	page 2-16
Language		Displays the Language setting screen in System Menu.	page 8-5
System Menu		Displays the System Menu screen.	page 8-3
Favorites		Displays the favorite list screen.	page 5-8

Display for Device Information

Shows device information. Allows you to check system and network information, as well as options that are used.

1 [**Home**] key > [**Task Screen**] > [**Device Information**]

2 Check the device information.

Device information

Tab	Description
Identification/Network	You can check ID information such as the model name, serial number, host name and location, and the IP address.
FAX[*1]	You can check the local fax number, local fax name, local fax ID and other fax information.
Software Ver./Capability	You can check the software version and performance.
Option	You can check information on the options that are used.

*1 Displayed only on products with the fax function installed.

Functions key

This screen appears when the Functions icon is selected.

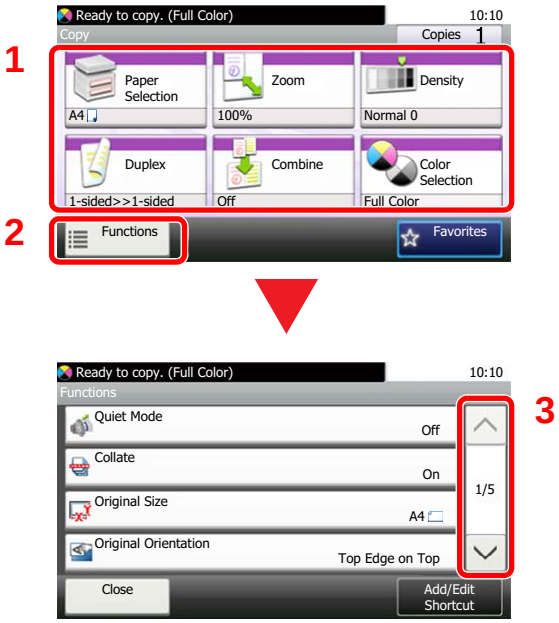

1 Display functions.

2 Select [**Functions**] to display other functions.

3 Select [∧] or [∨] to scroll up and down.

Display of Keys That Cannot Be Set

Keys of features that cannot be used due to feature combination restrictions or non-installation of options are in a non-selectable state.

Normal	Grayed out
	 In the following cases, the key is grayed out and cannot be selected. • Cannot be used in combination with a feature that is already selected.

Normal	Hidden
 	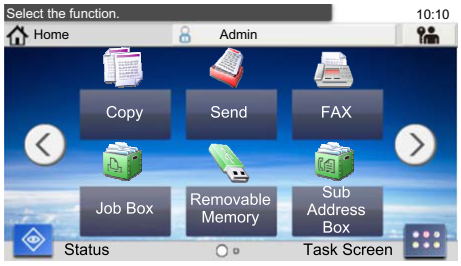  Cannot be used because an option is not installed. Example: When a SSD is not installed, [**Custom Box**] does not appear.

NOTE

If a key that you wish to use is grayed out, the settings of the previous user may still be in effect. In this case, select the [**Reset**] key and try again.

Enter key and Quick No. Search key

This section explains how to use the [**Enter**] key and [**Quick No. Search**] key on the operation panel.

Using the [Enter] key (↵)

The [**Enter**] key has the same function as the key with the Enter mark (↵), such as the [**OK** ↵] key and the [**Close** ↵].

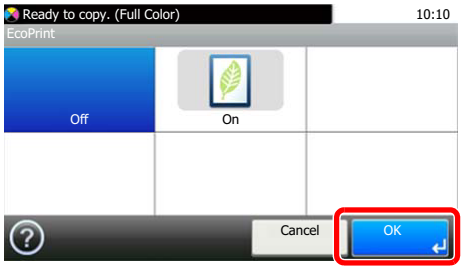

Using the [Quick No. Search] key ( )

The [**Quick No. Search**] key is used when using the numeric keys to directly enter the number, for example, when specifying the destination for the transmission using a speed-dial number.

For more information on speed dialing, refer to the following:

Specifying Destination (page 5-35)



Help Screen

If you have difficulty operating the machine, you can check how to operate it using the touch panel.

When the [?] (help) is displayed on the touch panel, you can select it to display the Help screen. The Help screen shows explanations of functions and how to use them.

Example: Checking the paper selection Help screen

1 Display the Paper Selection screen.

Paper Selection (page 6-10)

2

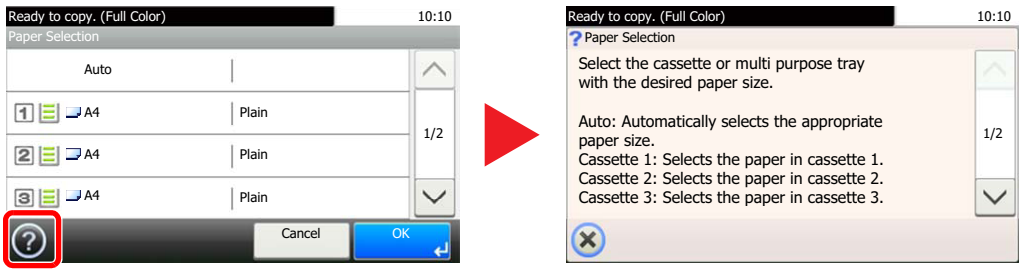

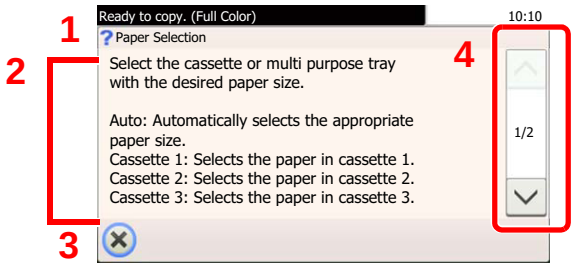

1 Help titles

2 Displays information about functions and machine operation.

3 Closes the Help screen and returns to the original screen.

4 Scrolls up and down when the help text cannot be displayed in its entirety on a single screen.

Login/Logout

If you are setting a function that requires administrator rights, or if user login administration is enabled, you must enter your login user name and login password.

NOTE

The factory default login user name and login password are set as shown below.

Login User Name: **3000**

Login Password: **3000**

You will be unable to login if you forget your login user name or login password. In this event, login with administrator privileges and change your login user name or login password.

Login

Normal login

1 Enter the login user name and login password to login.

1 If this screen is displayed during operations, select [**Keyboard**] to enter the login user name.

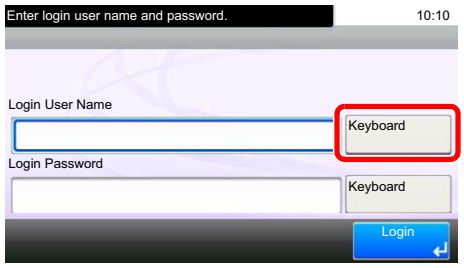

Character Entry Method (page 11-8)

2 [**Password**] > Enter the login password > [**OK**]

NOTE

If [**Network Authentication**] is selected as the user authentication method, authentication destinations are displayed and either [**Local**] or [**Network**] can be selected as the authentication destination.

2 Select [Login].

Simple Login



If this screen is displayed during operations, select a user and log in.

NOTE

If a user password is required, an input screen will be displayed.

Simple Login Settings (page 9-25)

Logout

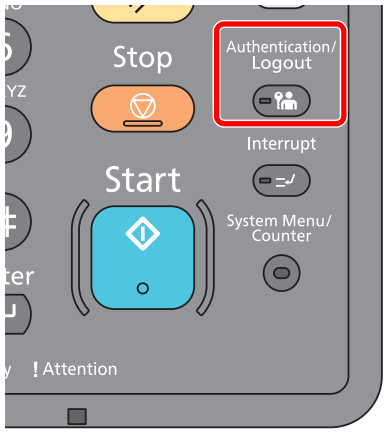

To logout from the machine, select the [**Authentication/Logout**] key to return to the login user name/login password entry screen.

Users are automatically logged out in the following circumstances:

- When the machine enters the sleep state.
- When the auto panel reset function is activated.

Default Settings of the Machine

Before using this machine, configure such settings as date and time, network configuration, and energy saving functions as needed. The Machine Setup Wizard is launched when the equipment is turned on for the first time after being installed. Also, configure the following settings if necessary.

NOTE

The default settings of the machine can be changed in System Menu.
For settings that are configurable from System Menu, refer to the following:

Setup and Registration (System Menu) (page 8-1)

Setting Date and Time

Follow the steps below to set the local date and time at the place of installation.

When you send an E-mail using the transmission function, the date and time as set here will be printed in the header of the E-mail message. Set the date, time and time difference from GMT of the region where the machine is used.

NOTE

- To make changes after this initial configuration, refer to the following:

Date/Timer/Energy Saver (page 8-40)

- The correct time can be periodically set by obtaining the time from the network time server.

Command Center RX User Guide

1 Display the screen.

[**System Menu/Counter**] key > [**Date/Timer/Energy Saver**]

2 Configure the settings.

[**Time Zone**] > [**Date/Time**] > [**Date Format**]

Item	Description
Time Zone	Set the time difference from GMT. Choose the nearest listed location from the list. If you select a region that utilizes summer time, configure settings for summer time.
Date/Time	Set the date and time for the location where you use the machine. If you perform Send as E-mail, the date and time set here will be displayed on the header. **Value: Year (2000 to 2037), Month (1 to 12), Day (1 to 31), Hour (00 to 23), Minute (00 to 59), Second (00 to 59)**
Date Format	Select the display format of year, month, and date. The year is displayed in Western notation. **Value: Month/Day/Year, Day/Month/Year, Year/Month/Day**

Network Setup (LAN Cable Connection)

The machine is equipped with network interface, which is compatible with network protocols such as TCP/IP (IPv4), TCP/IP (IPv6), NetBEUI, and IPSec. It enables network printing on the Windows, Macintosh, UNIX and other platforms.

Set up TCP/IP (IPv4) to connect to the Windows network.

For other network settings, refer to the following:

Network (page 8-29)

NOTE

If user login administration is enabled, you can only change the settings by logging in with administrator privileges. If user login administration is disabled, the user authentication screen appears. Enter a login user name and password, and select [**Login**].

The factory default login user name and login password are set as shown below.

Login User Name: **3000**

Login Password: **3000**

TCP/IP Settings

IPv4 setting

Set up TCP/IP (IPv4) to connect to the Windows network.

The default settings are "TCP/IP: On, DHCP: On, Auto-IP: On".

NOTE

Ask your network administrator for the IP address in advance, and have it ready when you configure this setting. In the following cases, set the IP address of DNS server on the Command Center RX.

- When using the host name with "DHCP" setting set to "Off"
- When using the DNS server with IP address that is not assigned by DHCP automatically.

Setting the IP Address of the DNS Server, refer to the following:

Command Center RX User Guide

1 Display the screen.

[**System Menu/Counter**] key > [**System/Network**] > "Network" > "TCP/IP Setting"

2 Configure the settings.

[**IPv4 Settings**]

Set the following.

When using DHCP server

[**DHCP**]: Set to [**On**].

When setting the static IP address

[**DHCP**]: Set to [**Off**].

[**IP Address**]: Enter the address.

[**Subnet Mask**]: Enter the subnet mask in decimal representation (0 to 255).

[**Default Gateway**]: Enter the address.

When using the Auto-IP, enter "0.0.0.0" in [**IP Address**].

IMPORTANT

After changing the setting, restart the network from System Menu, or turn the machine OFF and then ON.

Restart Network (page 8-34)

Wireless Network Settings

When the optional Wireless Network Interface Kit is installed on the machine and the connection settings are configured, it is possible to print in a wireless network (wireless LAN) environment. The following is an introduction to the settings for connecting using the Quick Setup.

To connect to a wireless access point, Quick Setup has the following four methods. Select a desired method.

Setup (page 8-35)

Available Network

Displays access points to which the machine can connect. Select a desired access point from the list.

Push Button

If the access point supports the push button method, wireless settings can be configured using the push button. This setting executes push button, and the connection is started by pressing the push button on the access point.

NOTE

The push button method supports only the WPS.

PIN Code Method (Device)

Starts connection at both sides using the PIN code which has been generated at the machine. In addition, the same PIN code should be entered into the access point previously.

PIN Code Method (Terminal)

Starts connection at both sides using the PIN code which has been generated at the access point. In addition, the same PIN code should be entered into the machine previously.

Energy Saver function

If a certain period of time elapses after the machine is last used, the machine automatically enters Low Power Mode to reduce power consumption. If a further period of time elapses without the machine being used, the machine automatically enters sleep mode, which minimizes power consumption. If the machine is not used while in sleep mode, the power automatically turns off.

Low Power Mode

If the machine is not operated for a certain period of time, the energy saver indicator will light up and the screen will become dark to reduce power consumption. This status is referred to as Low Power Mode. “Low power.” will be displayed on the screen.

The default preset time is 3 minute.

If print data is received during Low Power Mode, the machine automatically wakes up and starts printing. Also when fax data arrives while the machine is in Low Power Mode, the machine automatically wakes up and starts printing.

To resume, perform one of the following actions.

- Press the touch panel or any key on the operation panel.
- Open the document processor.
- Place originals in the document processor.

The machine will be ready to operate within 10 seconds.

Note that ambient environmental conditions, such as ventilation, may cause the machine to respond more slowly.

NOTE

If the Low Power Timer is equal to the Sleep Timer, a Sleep mode is preceded.

Sleep

To enter Sleep, select the [**Energy Saver**] key. Touch panel and all indicators on the operation panel will go out to save a maximum amount of power except the Energy Saver indicator. This status is referred to as Sleep.

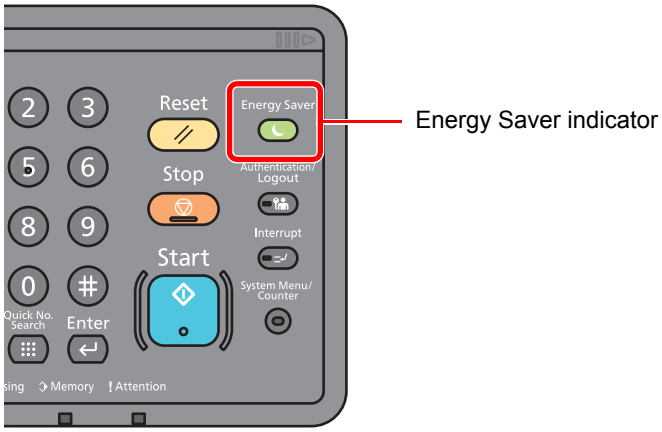

If print data is received during Sleep, the machine automatically wakes up and starts printing.

Also when fax data arrives while the machine is in Sleep, the machine automatically wakes up and starts printing.

To resume, perform the following actions.

- Select the [**Energy Saver**] key.

The machine will be ready to operate within 17.6 seconds.

Note that ambient environmental conditions, such as ventilation, may cause the machine to respond more slowly.

Auto Sleep

Auto Sleep automatically switches the machine into Sleep if left idle for a preset time.

The default preset time is 20 minutes (models for Europe) or 30 minutes (models except for Europe).

To change the preset sleep time, refer to the following:

Quick Setup Wizard (page 2-28)

NOTE

If the Low Power Timer is equal to the Sleep Timer, a Sleep mode is preceded.

Sleep Rules (models for Europe)

You can set whether sleep mode operates for each function. When the machine enters sleep mode, the ID card cannot be recognized.

For more information on Sleep Rules settings, refer to the following:

Sleep Rules (models for Europe) (page 8-41)

Sleep Level (Energy Saver and Quick Recovery) (models except for Europe)

For sleep level, you can toggle between the following two modes: Energy Saver mode and Quick Recovery mode. The default setting is Energy Saver mode.

Energy Saver mode reduces power consumption even more than Quick Recovery mode, and allows Sleep Mode to be set separately for each function. The ID card cannot be recognized.

NOTE

If the optional Network Interface Kit is installed, Energy Saver cannot be specified.

To resume, select the [**Energy Saver**] key on the operation panel. If print data is received during Sleep, the machine automatically wakes up and starts printing.

For more information on Sleep Level settings, refer to the following:

Quick Setup Wizard (page 2-28)

Quick Setup Wizard

For FAX functions, paper settings, Energy Saver functions and network settings, the following settings can be configured in a wizard-style screen.

FAX Setup[*1]	Configures basic fax settings.	
	1. Dialing/RX Mode	Dialing Mode[*2] Reception Mode Auto (DRD)[*3]
	2. Local FAX Info.	Local FAX Name Local FAX Number Local FAX ID TTI
	3. Sound	Speaker Volume Monitor Volume Job Finish Buzzer
	4. Rings	Normal[*4] Answering Machine[*4] FAX/TEL Switch[*4]
	5. Output	Paper Output[*5]
	6. Redial	Retry Times
Energy Saver Setup	Configures sleep mode and low power mode.	
	1. Sleep Mode	Sleep Timer Sleep Level (models except for Europe)
	2. Low Power Mode	Low Power Timer
Network Setup	Configures network settings.	
	1. Network	Obtain IP Address IP Address[*6] Subnet Mask[*6] Default Gateway[*6]

*1 FAX functions are available only on products with the fax function installed.
*2 Inch version only.
*3 DRD reception mode is available for some countries.
*4 This setting does not appear in some regions.
*5 Displayed only when the optional Job Separator and mailbox are installed.
*6 Not displayed when "Obtain IP Address" is set to [**Auto (DHCP)**].

NOTE

If the user authentication screen appears, enter your login user name and login password and select [**Login**]. For this, you need to login with administrator privileges. The factory default login user name and login password are set as shown below.

Login User Name: **3000**

Login Password: **3000**

1 Display the screen.

[**System Menu/Counter**] key > [**Quick Setup Wizard**]

2 Select a function.

3 Configure the settings.

Start the wizard. Follow the instructions on the screen to configure settings.

NOTE

If you experience difficulty configuring the settings, refer to the following:

Help Screen (page 2-20)

Control	Description
End	Exits the wizard. Settings configured so far are applied.
Previous	Returns to the previous item.
Skip	Advances to the next item without setting the current item.
Next	Advances to the next screen.
Back	Returns to the previous screen.
Complete	Register the settings and exit the wizard.

Installing Software

Install appropriate software on your PC from the included DVD (Product Library) if you want to use the printer function of this machine or perform TWAIN / WIA transmission or Network FAX transmission from your PC.

Software on DVD (Windows)

You can use either [**Express Install**] or [**Custom Install**] can be selected for the installation method. [**Express Install**] is the standard installation method. To install components that cannot be installed by [**Express Install**], use [**Custom Install**].

For details on Custom Installation, refer to the following:

Custom Install (page 2-34)

Software	Description	Express Install
KX DRIVER	This driver enables files on a computer to be printed by the machine. Multiple page description languages (PCL XL, KPDL, etc.) are supported by a single driver. This printer driver allows you to take full advantage of the features of the machine. Use this driver to create PDF files.	○
KX XPS DRIVER	This printer driver supports the XPS (XML Paper Specification) format developed by Microsoft Corporation.	-
KPDL mini-driver/PCL mini-driver	This is a Microsoft MiniDriver that supports PCL and KPDL. There are some restrictions on the machine features and option features that can be used with this driver.	-
FAX Driver	This makes it possible to send a document created in a computer software application as a fax via the machine.	-
Kyocera TWAIN Driver	This driver enables scanning on the machine using a TWAIN-compliant software application.	○
Kyocera WIA Driver	WIA (Windows Imaging Acquisition) is a function of Windows that enables reciprocal communication between an imaging device such as a scanner and an image processing software application. An image can be acquired using a WIA-compliant software application, which is convenient when a TWAIN-compliant software application is not installed in the computer.	-
KYOCERA Net Viewer	This is a utility that enables monitoring of the machine on the network.	-
Status Monitor	This is a utility that monitors the printer status and provides an ongoing reporting function.	○
File Management Utility	This makes it possible to send and save a scanned document to a specified network folder.	-
KYOCERA Net Direct Print	This makes it possible to print a PDF file without starting Adobe Acrobat/ Reader.	-
FONTS	These are display fonts that enable the machine's built-in fonts to be used in a software application.	○

NOTE

- Installation on Windows must be done by a user logged on with administrator privileges.
- The optional FAX Kit is required in order to make use of fax functionality.
- WIA Driver and KX XPS DRIVER cannot be installed on Windows XP.

Installing Software in Windows

Express Install

The following procedure is an example for installing the software in Windows 7 using [**Express Install**].

For details on Custom Installation, refer to the following:

Custom Install (page 2-34)

1 Insert the DVD.

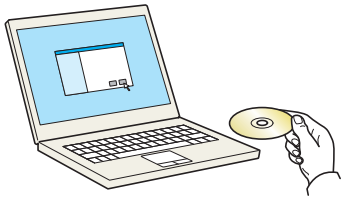

NOTE

- Installation on Windows must be done by a user logged on with administrator privileges.
- If the "**Welcome to the Found New Hardware Wizard**" dialog box displays, select [**Cancel**].
- If the autorun screen is displayed, click [**Run setup.exe**].
- If the user account management window appears, click [**Yes**] ([**Allow**]).

2 Display the screen.

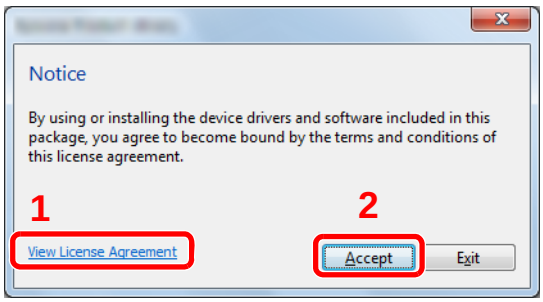

1 Click [**View License Agreement**] and read the License Agreement.

2 Click [**Accept**].

3 Install using [Express Install].

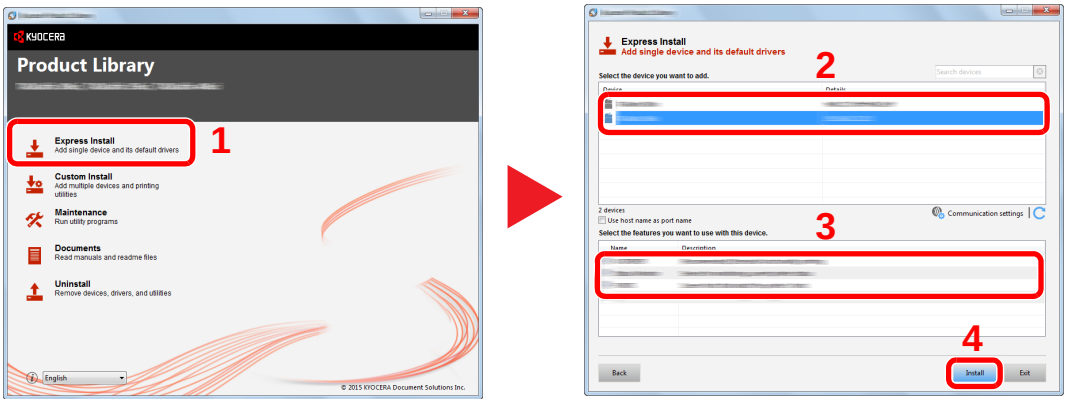

You can also select [**Use host name as port name**] and set to use the host name of the standard TCP/IP port. (A USB connection cannot be used.)

NOTE

- The machine cannot be detected unless it is on. If the computer fails to detect the machine, verify that it is connected to the computer via a network or USB cable and that it is turned on and click (Refresh).
- If the Windows security window appears, click [**Install this driver software anyway**].
- To install Status Monitor, it is necessary to install Microsoft .NET Framework 4.0 beforehand.

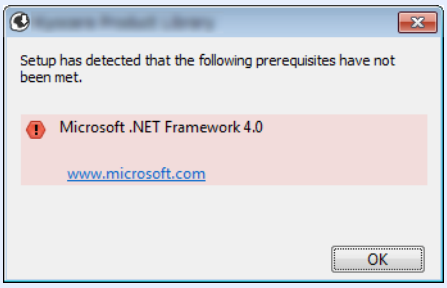

4 Finish the installation.

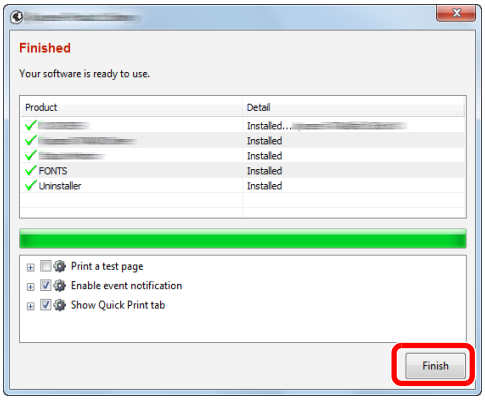

When "**Your software is ready to use**" appears, you can use the software. To print a test page, click the "**Print a test page**" checkbox and select the machine.

Click [**Finish**] to exit the wizard.

NOTE

When you have selected [**Device settings**] in Windows XP, the dialog box for device setting will appear after [**Finish**] is clicked. Configure the settings for options installed on the machine. Device settings can be configured after the installation is completed.

Printer Driver User Guide

If a system restart message appears, restart the computer by following the screen prompts. This completes the printer driver installation procedure.

If you are installing the TWAIN driver, continue by configuring the following:

Setting TWAIN Driver (page 2-40)

Custom Install

The following procedure is an example for installing the software in Windows 7 using [**Custom Install**].

1 Insert the DVD.

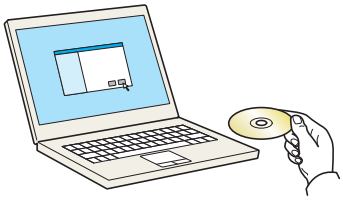

NOTE

- Installation on Windows must be done by a user logged on with administrator privileges.
- If the "**Welcome to the Found New Hardware Wizard**" dialog box displays, select [**Cancel**].
- If the autorun screen is displayed, click [**Run setup.exe**].
- If the user account management window appears, click [**Yes**] ([**Allow**]).

2 Display the screen.

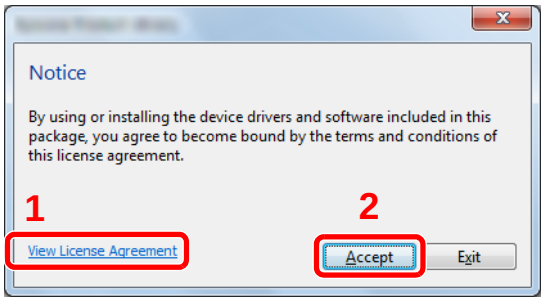

1 Click [**View License Agreement**] and read the License Agreement.

2 Click [**Accept**].

3 Install using [Custom Install].

1 Select the device to be installed.

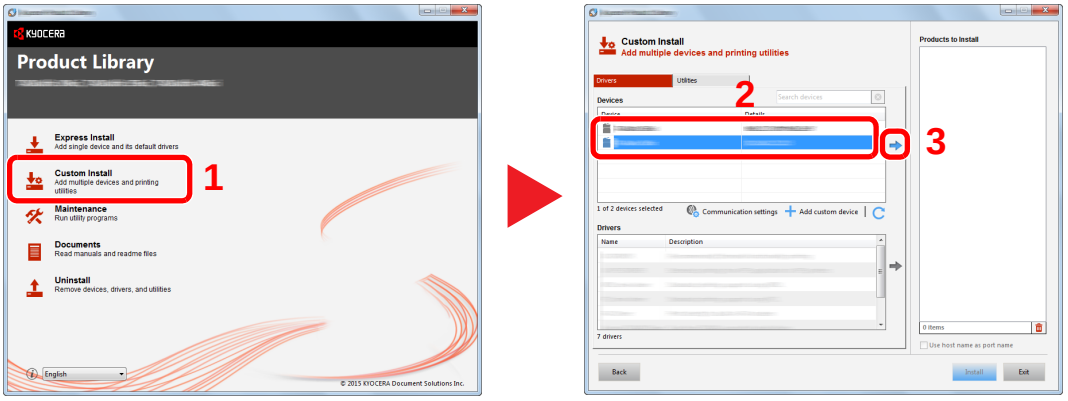

2 Select the driver to be installed.

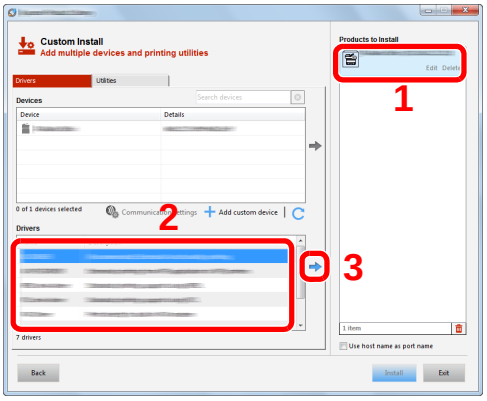

3 Select the utility to be installed.

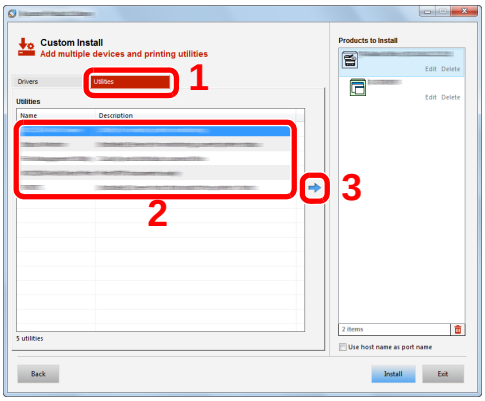

4 Click [**Install**].

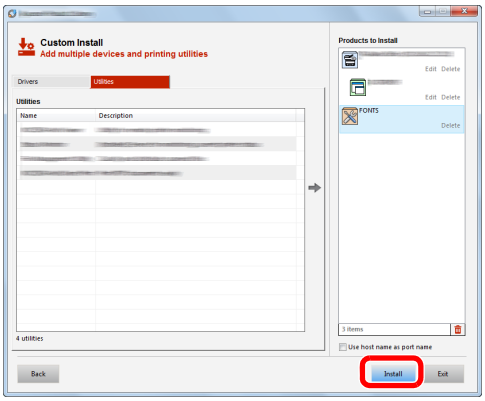

NOTE

- To install Status Monitor, it is necessary to install Microsoft .NET Framework 4.0 beforehand.

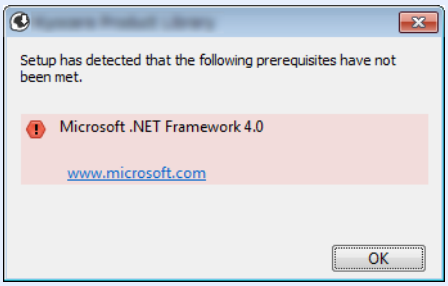

4 Finish the installation.

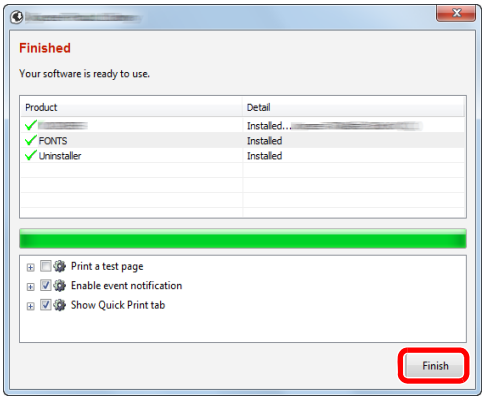

When "**Your software is ready to use**" appears, you can use the software. To print a test page, click the "**Print a test page**" checkbox and select the machine.

Click [**Finish**] to exit the wizard.

NOTE

When you have selected [**Device settings**] in Windows XP, the dialog box for device setting will appear after [**Finish**] is clicked. Configure the settings for options installed on the machine. Device settings can be configured after the installation is completed.

➡ **Printer Driver User Guide**

If a system restart message appears, restart the computer by following the screen prompts. This completes the printer driver installation procedure.

If you are installing the TWAIN driver, continue by configuring the following:

➡ Setting TWAIN Driver (page 2-40)

Uninstalling the Software

Perform the following procedure to delete the Software from your computer.

NOTE

Uninstallation on Windows must be done by a user logged on with administrator privileges.

1 Display the screen.

Click [**Start**] button on the Windows and then select [**All Programs**], [**Kyocera**], and [**Uninstall Kyocera Product Library**] to display the Uninstall Wizard.

NOTE

In Windows 8, click [**Search**] in charms, and enter "Uninstall Kyocera Product Library" in the search box. Select [**Uninstall Kyocera Product Library**] in the search list.

2 Uninstall the software.

Place a check in the check box of the software to be deleted.

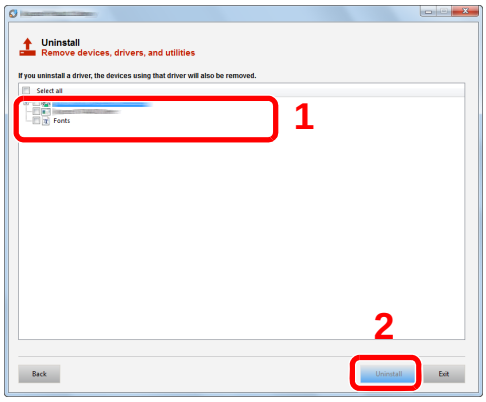

3 Finish uninstalling.

If a system restart message appears, restart the computer by following the screen prompts. This completes the software uninstallation procedure.

NOTE

- The software can also be uninstalled using the Product Library.
- In the Product Library screen, click [**Uninstall**], and follow the on-screen instructions to uninstall the software.

Installing Software in Mac Computer

The machine's printer functionality can be used by a Mac computer.

NOTE

- Installation on Mac OS must be done by a user logged on with administrator privileges.
- When printing from a Macintosh computer, set the machine's emulation to [**KPDL**] or [**KPDL(Auto)**].

Printer (page 8-26)

- If connecting by Bonjour, enable Bonjour in the machine's network settings.

Bonjour (page 8-30)

- In the Authenticate screen, enter the name and password used to log in to the operating system.

1 Insert the DVD.

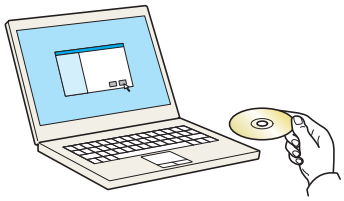

Double-click the [**Kyocera**] icon.

2 Display the screen.

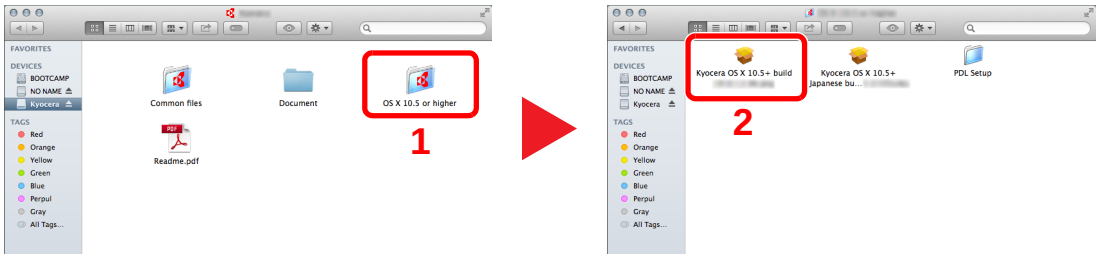

Double-click [**Kyocera OS X x.x**] depending on your Mac OS version.

3 Install the Printer Driver.



Install the printer driver as directed by the instructions in the installation software.

This completes the printer driver installation.

If a USB connection is used, the machine is automatically recognized and connected.
If an IP connection is used, the settings below are required.

4 Configure the printer.

1 Open System Preferences and add the printer.

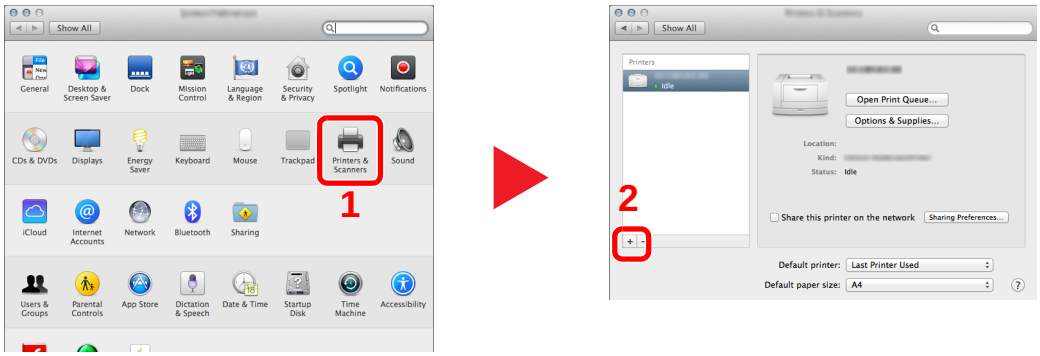

2 Select [**Default**] and click the item that appears in "Name".

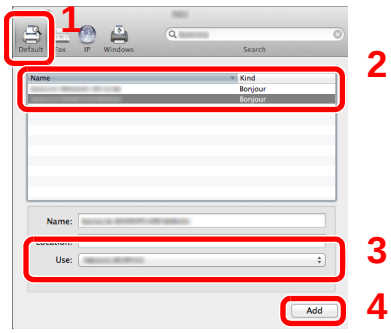

3 Select the driver in "Use".

NOTE

When using an IP connection, click the IP icon for an IP connection and then enter the host name or IP address. The number entered in "Address" will automatically appear in "Name". Change if needed.

3 Select the options available for the machine.

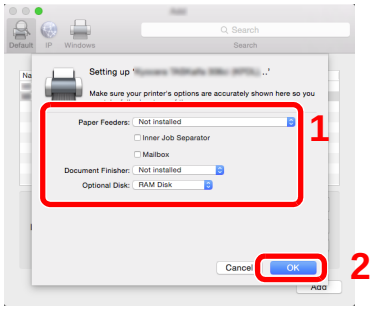

4 The selected machine is added.

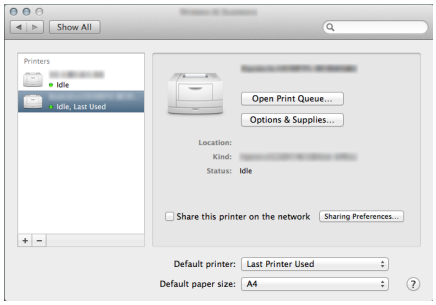

Setting TWAIN Driver

Register this machine to the TWAIN Driver. Instructions are based on interface elements as they appear in Windows 7.

1 Display the screen.

1 Select [**Start**] button on the Windows, [**All Programs**], [**Kyocera**] and then [**TWAIN Driver Setting**]. TWAIN Driver screen appears.

> **NOTE**
> In Windows 8, click [**Search**] in charms, and enter "TWAIN Driver Setting" in the search box. Select [**TWAIN Driver Setting**] in the search list.

2 Click [**Add**].

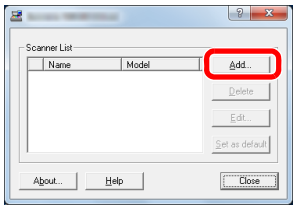

2 Configure TWAIN Driver.

(Network)

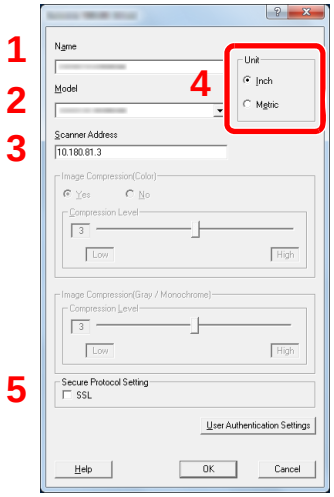

1 Enter the machine name.
2 Select this machine from the list.
3 Enter the machine's IP address or host name.
4 Set units of measurement.
5 When using SSL, select the checkbox beside SSL.

(USB)

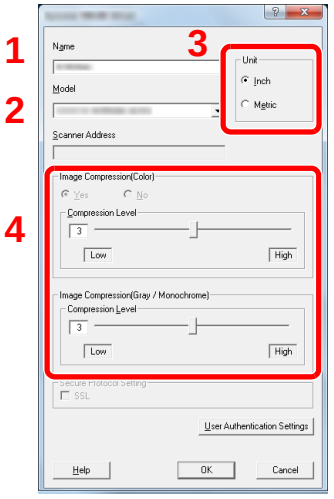

1 Enter the machine name.
2 Select this machine from the list.
3 Set units of measurement.
4 Set the Compression Level.

NOTE

When the machine's IP address or host name is unknown, contact Administrator.

3 Finish registering.

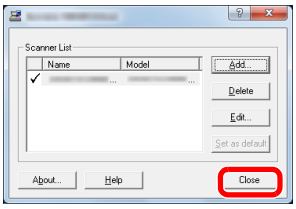

NOTE

Click [**Delete**] to delete the added machine. Click [**Edit**] to change names.

Setting WIA Driver

Register this machine to the WIA Driver. Instructions are based on interface elements as they appear in Windows 7.

1 Display the screen.

1 Click [**Start**] button on the Windows and enter [**Scanner**] in [**Program and File Search**]. Click [**View scanners and cameras**] in the search list then the Scanners and Cameras screen appears.

> **NOTE**
> In Windows 8, click [**Search**] in charms, and enter "View scanners and cameras" in the search box. Select [**View scanners and cameras**] in the search list then the Scanners and Cameras screen appears.

2 Select the same name as this machine from WIA Drivers, and click [**Properties**].

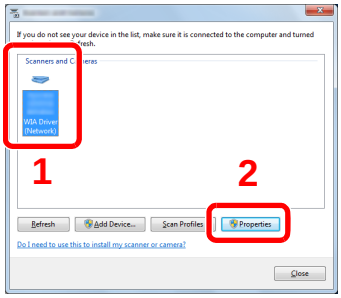

2 Configure WIA Driver.

(Network)

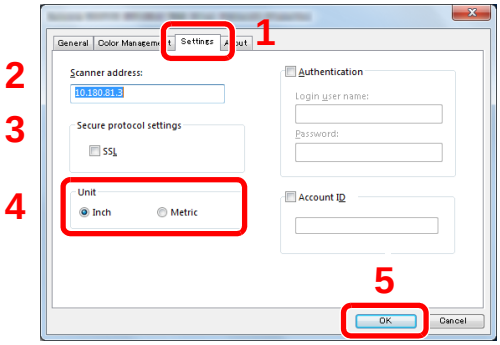

1 Click the [**Settings**] tab.
2 Enter the machine IP addresses or host name.
3 When using SSL, select the checkbox beside SSL.
4 Set units of measurement.
5 Click [**OK**].

(USB)

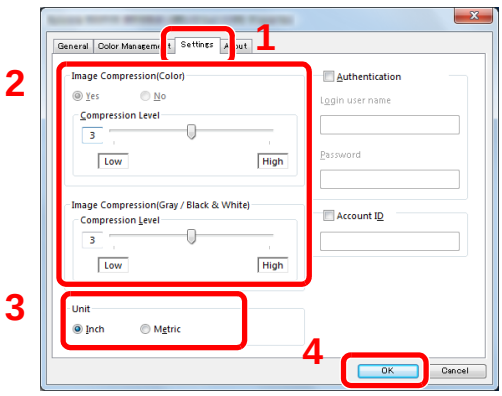

1 Click the [**Settings**] tab.
2 Set the Compression Level.
3 Set units of measurement.
4 Click [**OK**].

Checking the Counter

Check the number of sheets printed and scanned.

1 Display the screen.

[**System Menu/Counter**] key > [**Counter**]

2 Check the counter.

Additional Preparations for the Administrator

In addition to the information provided in this chapter, the administrator of this machine should check the following, and configure the settings as needed.

Sending Documents to a PC

To Send to a Shared Folder (Send to Folder (SMB))

To send a document that has been loaded, you need to create a shared folder to receive the document on your computer.

Preparation for Sending a Document to a Shared Folder in a PC (page 3-12)

To E-mail Scanned Images (Send as E-mail)

You can send a scanned original image as an E-mail attachment.

E-mail Settings (page 2-52)

Strengthening the Security

This machine is shipped with two default users registered one with Machine Administrator rights, and another with Administrator rights.Logging in as this user will allow you to configure all settings; therefore, please change the login user name and password.

In addition, this machine is equipped with user authentication function, which can be configured to limit the access to this machine to only those who have a registered login name and password.

User Authentication and Accounting (User Login, Job Accounting) (page 9-1)

I want to...	Function	Reference page
Restrict the users of the machine.	User Login	page 9-2
	Auto Panel Reset	page 8-40
	ID Card Settings*1	page 9-28
Restrict the basic functions that can be used.	Local Authorization	page 9-16
	Group Authorization Set.	page 9-17
Prevent another user from handling the documents stored in the machine.	Custom Box*2	page 5-43
Prevent the data stored in the machine from being leaked.	Data Overwrite*3	Refer to the **Data Security Kit (E) Operation Guide**.
	Encryption*3	
	PDF Encryption Functions	page 6-34
Completely delete the data on the machine before disposing of the machine.	Data Sanitization	page 8-39

*1 The optional Card Authentication Kit is required.
*2 The optional SSD is required.
*3 The optional Data Security Kit is required.

I want to...	Function	Reference page
Protect the transmission from interception and wiretapping.	IPP over SSL	page 8-31
	HTTPS	page 8-31
	LDAP Security	Refer to the **Command Center RX User Guide**.
	SMTP Security	page 8-33
	POP3 Security	page 8-33
	FTP Encrypted TX	page 6-37
	Enhanced WSD (SSL)	page 8-33
	IPSec	page 8-33
	SNMPv3	page 8-31

Command Center RX

If the machine is connected to the network, you can configure various settings using Command Center RX.

This section explains how to access Command Center RX, and how to change security settings and the host name.

Command Center RX User Guide

NOTE

To fully access the features of the Command Center RX pages, enter the User Name and Password and click [**Login**]. Entering the predefined administrator password allows the user to access all pages, including Document Box, Address Book, and Settings on the navigation menu. The factory default setting for the default user with administrator privileges is shown below. (Upper case and lower case letters are distinguished (case sensitive).)

Login User Name: **Admin**
Login Password: **Admin**

Settings that the administrator and general users can configure in Command Center RX are as follows.

Setting	Description	Administ-rator	General User
Device Information	The machine's structure can be checked.	○	○
Job Status	Displays all device information, including print and scan jobs, storing jobs, scheduled jobs, and job log history.	○	○
Document Box	Add or delete document boxes, or delete documents within a document box.	○	○*1
Address Book	Create, edit, or delete addresses and address groups.	○	○*1
Device Settings	Configure the advanced settings of the machine.	○	-
Function Settings	Configure the advanced function settings.	○	-
Network Settings	Configure the network advanced settings.	○	-
Security Settings	Configure the security advanced settings.	○	-
Management Settings	Configure the advanced management settings.	○	-

*1 The logged in user may not be able to configure some settings, depending on the permissions of the user.

NOTE

Here, information on the FAX settings has been omitted.

FAX System 11 Operation Guide

Accessing Command Center RX

1 Display the screen.

1 Launch your Web browser.

2 In the address or location bar, enter the machine's IP address or the host name.

Click in the following order to check the machine's IP address and the host name.

[**Device Information**] in the home screen > [**Identification/Network**]

Examples: https://192.168.48.21/ (for IP address)
https://MFP001 (if the host name is "MFP001")

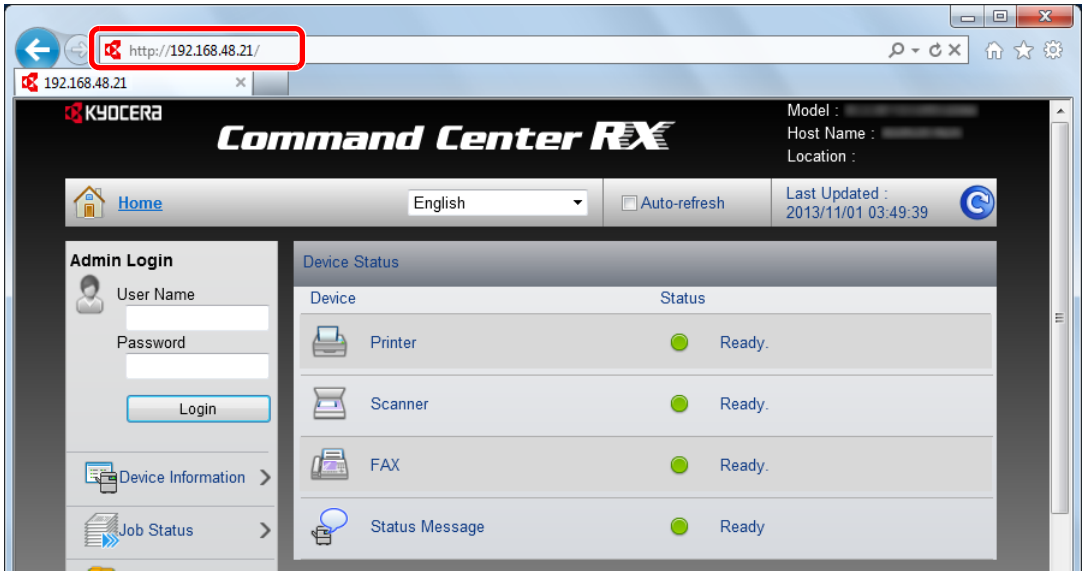

The web page displays basic information about the machine and Command Center RX as well as their current status.

NOTE

If the screen "There is a problem with this website's security certificate." is displayed, configure the certificate.

➔ **Command Center RX User Guide**

You can also continue the operation without configuring the certificate.

2 Configure the function.

Select a category from the navigation bar on the left of the screen.

NOTE

To fully access the features of the Command Center RX pages, enter the User Name and Password and click [**Login**]. Entering the predefined administrator password allows the user to access all pages, including Document Box, Address Book, and Settings on the navigation menu. The factory default setting for the default user with administrator privileges is shown below. (Upper case and lower case letters are distinguished (case sensitive).)

Login User Name: Admin
Login Password: Admin

Changing Security Settings

This section explains how to change the security settings.

1 Display the screen.

1 Launch your Web browser.

2 In the address or location bar, enter the machine's IP address or the host name.

Click in the following order to check the machine's IP address and the host name.

[**Device Information**] in the home screen > [**Identification/Network**]

3 Log in with administrator privileges.

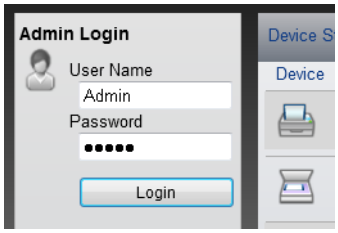

The factory default setting for the default user with administrator privileges is shown below. (Upper case and lower case letters are distinguished (case sensitive).)

Login User Name: Admin
Login Password: Admin

4 Click [**Security Settings**].

2 Configure the Security Settings.

From the [**Security Settings**] menu, select the setting you want to configure.

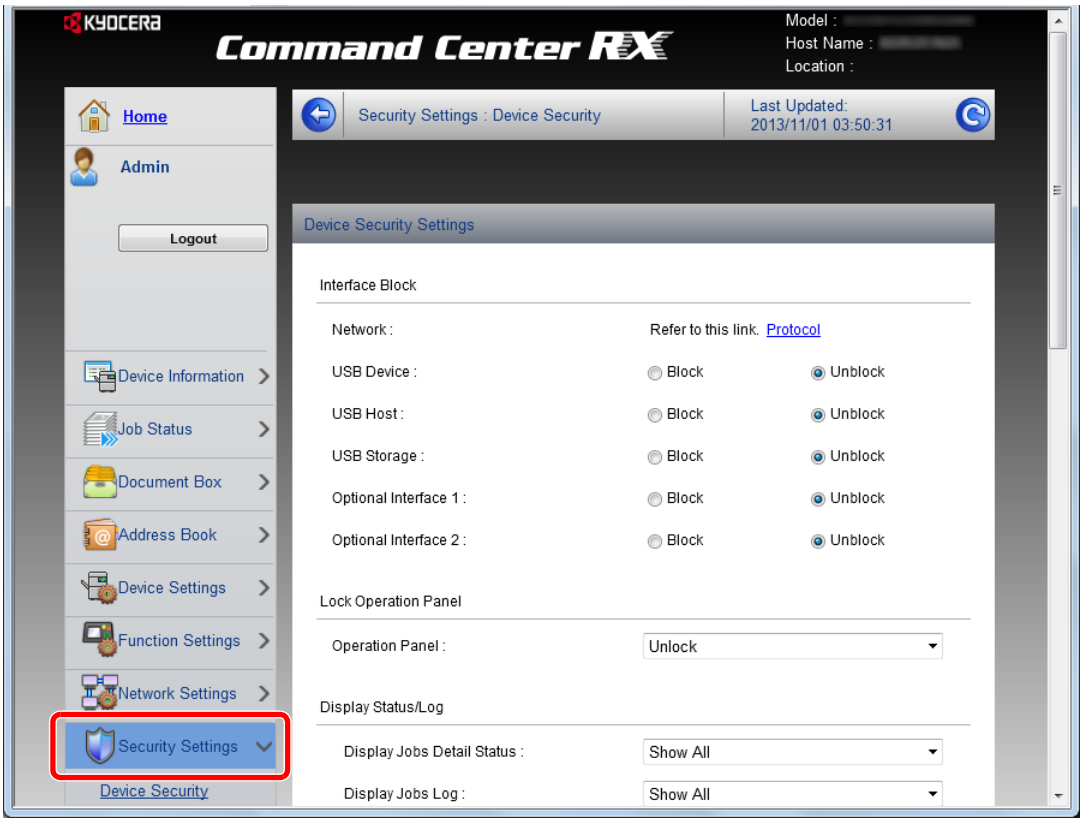

NOTE

For details on settings related to certificates, refer to the following:

Command Center RX User Guide

Changing Device Information

Change the device information of the machine.

1 Display the screen.

1 Launch your Web browser.

2 In the address or location bar, enter the machine's IP address or the host name.

Click in the following order to check the machine's IP address and the host name.

[**Device Information**] in the home screen > [**Identification/Network**]

3 Log in with administrator privileges.

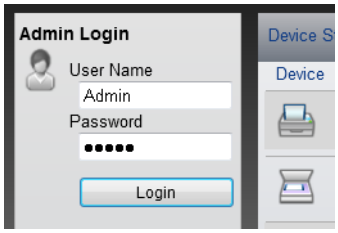

The factory default setting for the default user with administrator privileges is shown below. (Upper case and lower case letters are distinguished (case sensitive).)

Login User Name: Admin
Login Password: Admin

4 From the [**Device Settings**] menu, click [**System**].

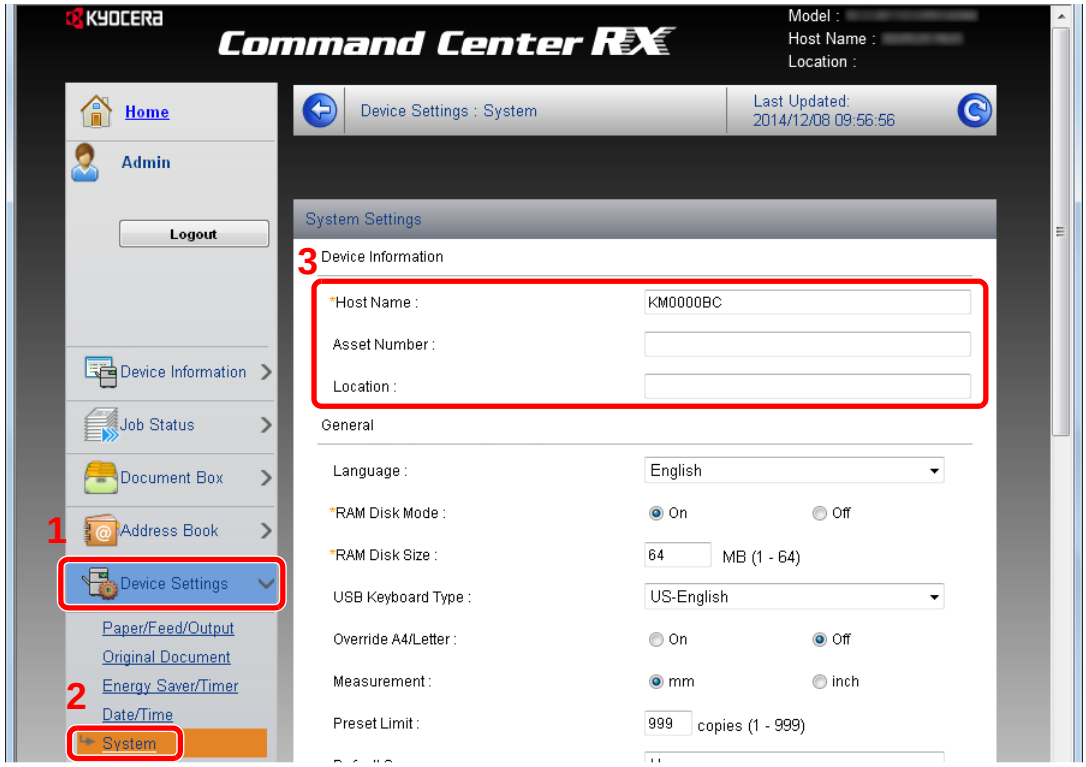

2 Specify the host name.

Enter the device information, and then click [**Submit**].

IMPORTANT

After changing the setting, restart the network or turn the machine OFF and then ON.

To restart the network interface card, click [Reset] in the [Management Settings] menu, and then click [Restart Network] in "Restart".

E-mail Settings

By configuring the SMTP settings, it is possible to send the images scanned by the machine as E-mail attachments and to send E-mail notices when jobs have been completed.

To use this function, this machine must be connected to a mail server using the SMTP protocol.

In addition, configure the following.

- SMTP settings
  Item: "SMTP Protocol" and "SMTP Server Name" in "SMTP"
- The sender address when the machine sends E-mails
  Item: "Sender Address" in "E-mail Send Settings"
- The setting to limit the size of E-mails
  Item: "E-mail Size Limit" in "E-mail Send Settings"

The procedure for specifying the SMTP settings is explained below.

1 Display the screen.

Display the SMTP Protocol screen.

1 Launch your Web browser.

2 In the address or location bar, enter the machine's IP address or the host name.

Click in the following order to check the machine's IP address and the host name.

[**Device Information**] in the home screen > [**Identification/Network**]

3 Log in with administrator privileges.

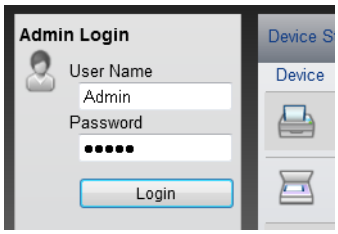

The factory default setting for the default user with administrator privileges is shown below. (Upper case and lower case letters are distinguished (case sensitive).)

Login User Name: Admin
Login Password: Admin

4 From the [**Network Settings**] menu, click [**Protocol**].

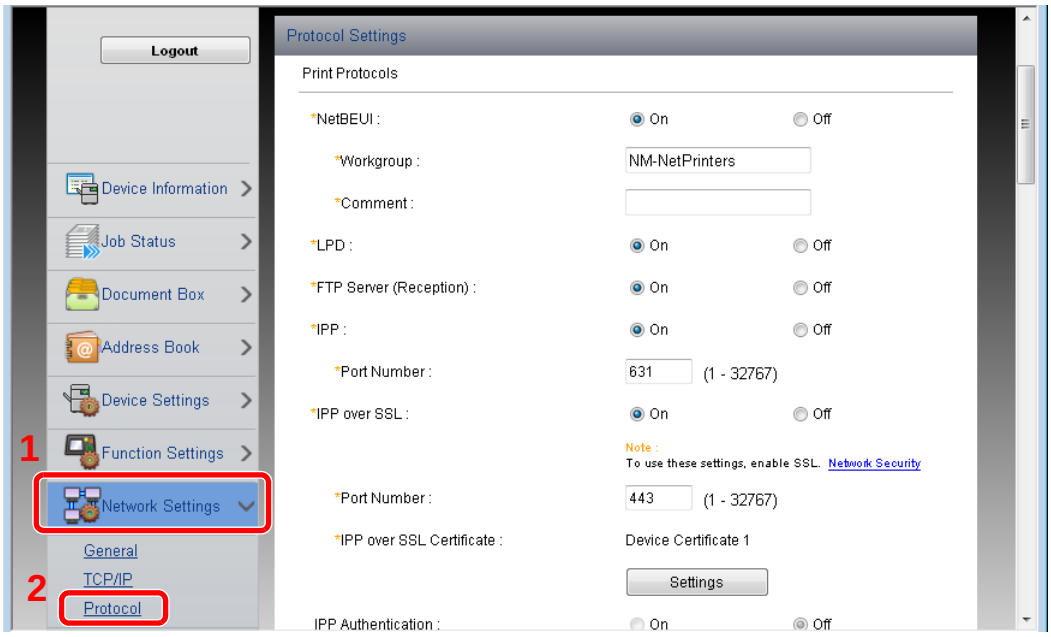

2 Configure the settings.

Set "SMTP (E-mail TX)" to [**On**] in the "Send Protocols".

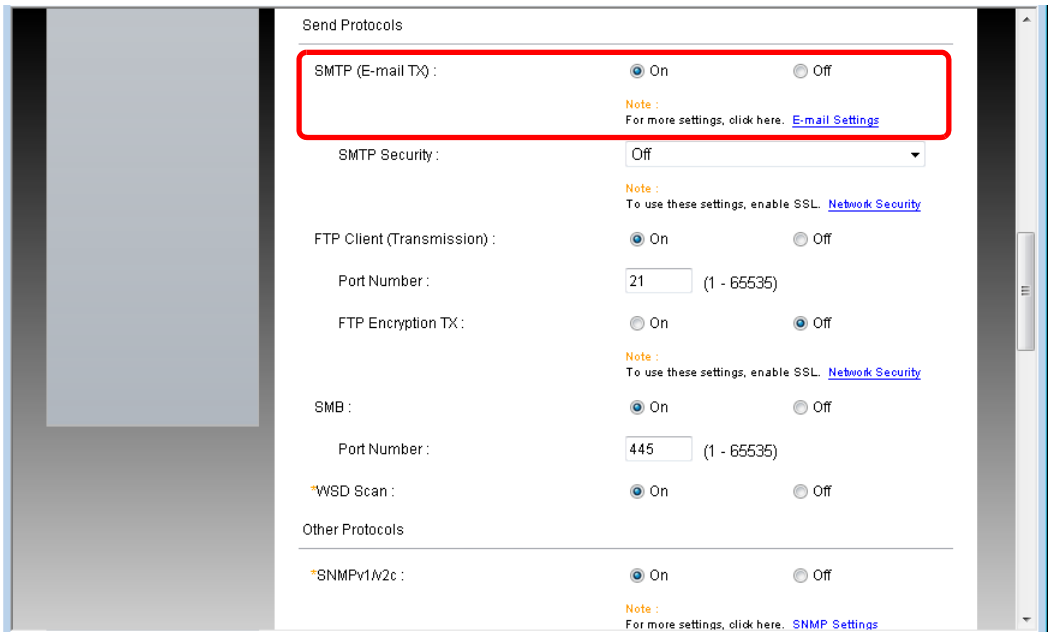

3 Display the screen.

Display the E-mail Settings screen.

From the [**Function Settings**] menu, click [**E-mail**].

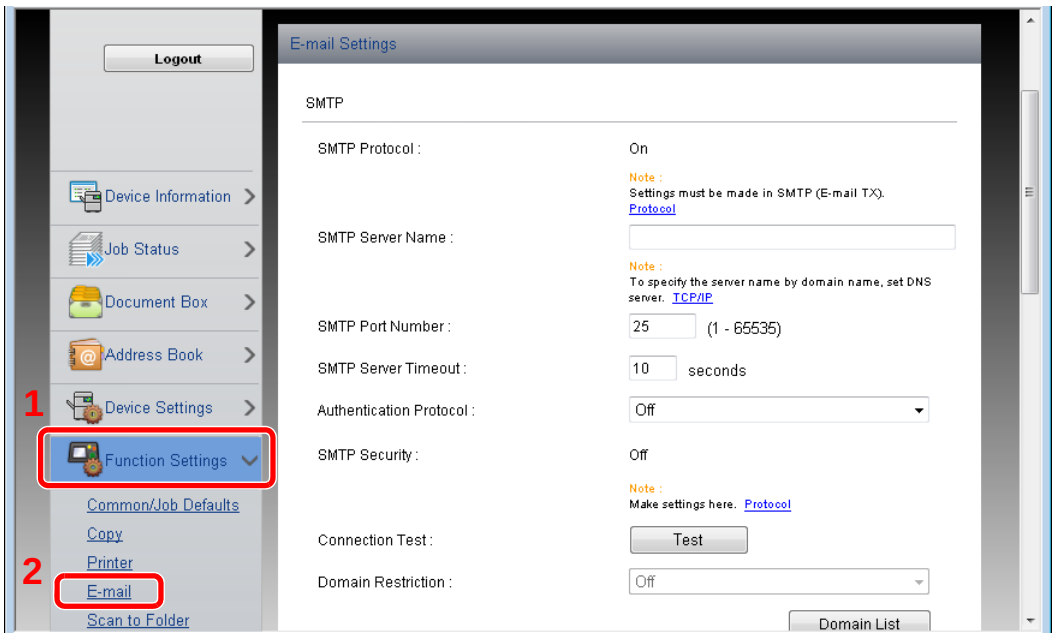

4 Configure the settings.

Enter "SMTP" and "E-mail Send Settings" items.

Setting		Description
SMTP		Set to send e-mail from the machine.
	SMTP Protocol	Displays the SMTP protocol settings. Check that "SMTP Protocol" is set to [**On**]. If [**Off**] is set, click [**Protocol**] and set the SMTP protocol to [**On**].
	SMTP Server Name[*1]	Enter the host name or IP address of the SMTP server.
	SMTP Port Number	Specify the port number to be used for SMTP. The default port number is 25.
	SMTP Server Timeout	Set the amount of time to wait before time-out in seconds.
	Authentication Protocol	To use SMTP authentication, enter the user information for authentication.
	SMTP Security	Set SMTP security. Turn on "SMTP Security" in "SMTP (E-mail TX)" on the [**Protocol Settings**] page.
	Connection Test	Tests to confirm that the settings are correct.
	Domain Restriction	To restrict the domains, click the [**Domain List**] and enter the domain names of addresses to be allowed or rejected. Restriction can also be specified by e-mail address.
POP3	**POP3 Protocol**	You don't need to set the following items when you only enable the function of sending e-mail from the machine. Set the following items if you want to enable the function of receiving e-mail on the machine. ➡ **Command Center RX User Guide**
	Check Interval	
	Run once now	
	Domain Restriction	
	POP3 User Settings	
E-mail Send Settings	**E-mail Size Limit**	Enter the maximum size of E-mail that can be sent in kilobytes. When E-mail size is greater than this value, an error message appears and E-mail sending is cancelled. Use this setting if you have set E-mail Size Limit for SMTP server. If not, enter a value of 0 (zero) to enable E-mail sending regardless of the size limit.
	Sender Address[*1]	Specify the sender address for when the machine sends E-mails, such as the machine administrator, so that a reply or non-delivery report will go to a person rather than to the machine. The sender address must be entered correctly for SMTP authentication. The maximum length of the sender address is 128 characters.
	Signature	Enter the signature. The signature is free form text that will appear at the end of the E-mail body. It is often used for further identification of the machine. The maximum length of the signature is 512 characters.
	Function Defaults	Change the function default settings in [**Common/Job Default Settings**] page.

*1 Be sure to enter the items.

5 Click [Submit].

Registering Destinations

You can register destinations to the machine's Address Book, from Command Center RX.

1 Display the screen.

1 Launch your Web browser.

2 In the address or location bar, enter the machine's IP address or the host name.

Click in the following order to check the machine's IP address and the host name.

[**Device Information**] in the home screen > [**Identification/Network**]

3 Log in with administrator privileges.

The factory default setting for the default user with administrator privileges is shown below. (Upper case and lower case letters are distinguished (case sensitive).)

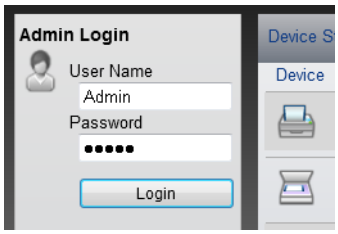

Login User Name: Admin
Login Password: Admin

4 From the [**Address Book**] menu, click [**Machine Address Book**].

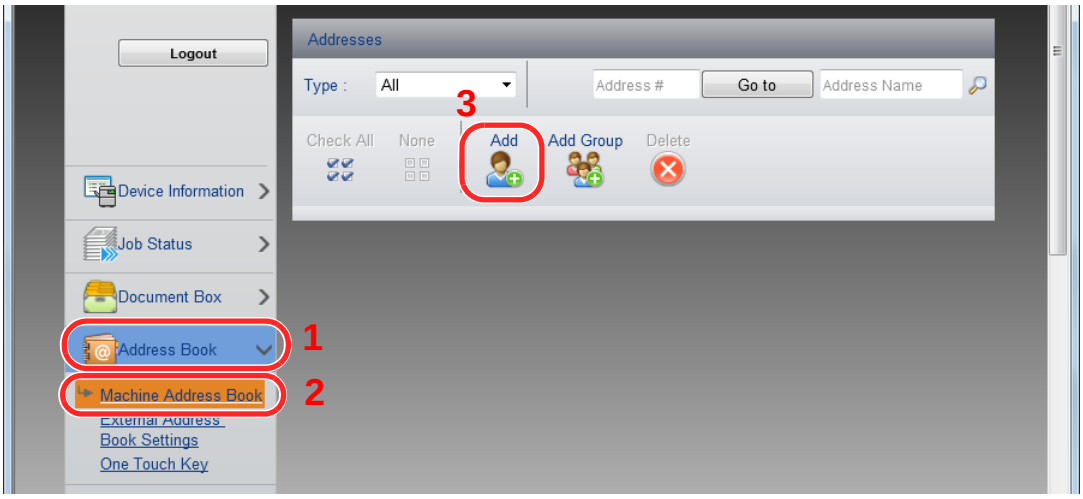

5 Click [**Add**].

2 Populate the fields.

1 Enter the destination information.

Enter the information for the destination you want to register. The fields to populate are the same as when registering via operation panel.

Registering Destinations in the Address Book (page 3-22)

2 Click [**Submit**].

Creating a New Custom Box

You can register a custom box from Command Center RX.

NOTE

To use Custom Box, an optional SSD must be installed in the machine.

1 Display the screen.

1 Launch your Web browser.

2 In the address or location bar, enter the machine's IP address or the host name.

Click in the following order to check the machine's IP address and the host name.

[**Device Information**] in the home screen > [**Identification/Network**]

3 From the [**Document Box**] menu, click [**Custom Box**].

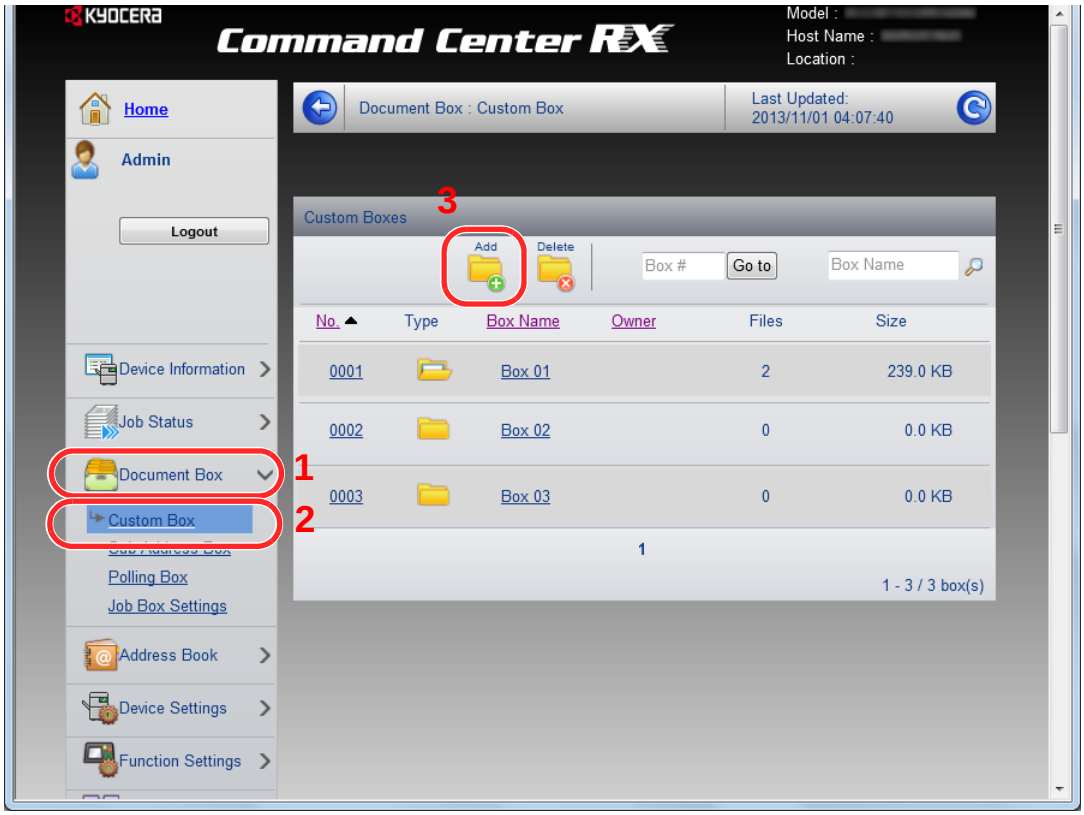

4 Click [**Add**].

2 Configure the Custom Box.

1 Enter the box details.

Enter the information for the custom box you want to register. For details on the fields to populate, refer to the following:

➡ **Command Center RX User Guide**

2 Click [**Submit**].

Printing a document stored in a Custom Box

A document stored in a Custom Box can be printed from Command Center RX.

1 Display the screen.

1 Launch your Web browser.

2 In the address or location bar, enter the machine's IP address or the host name.

Click in the following order to check the machine's IP address and the host name.

[**Device Information**] in the home screen > [**Identification/Network**]

3 From the [**Document Box**] menu, click [**Custom Box**].



4 Click the number or name of the Custom Box in which the document is stored.

2 Print the document.

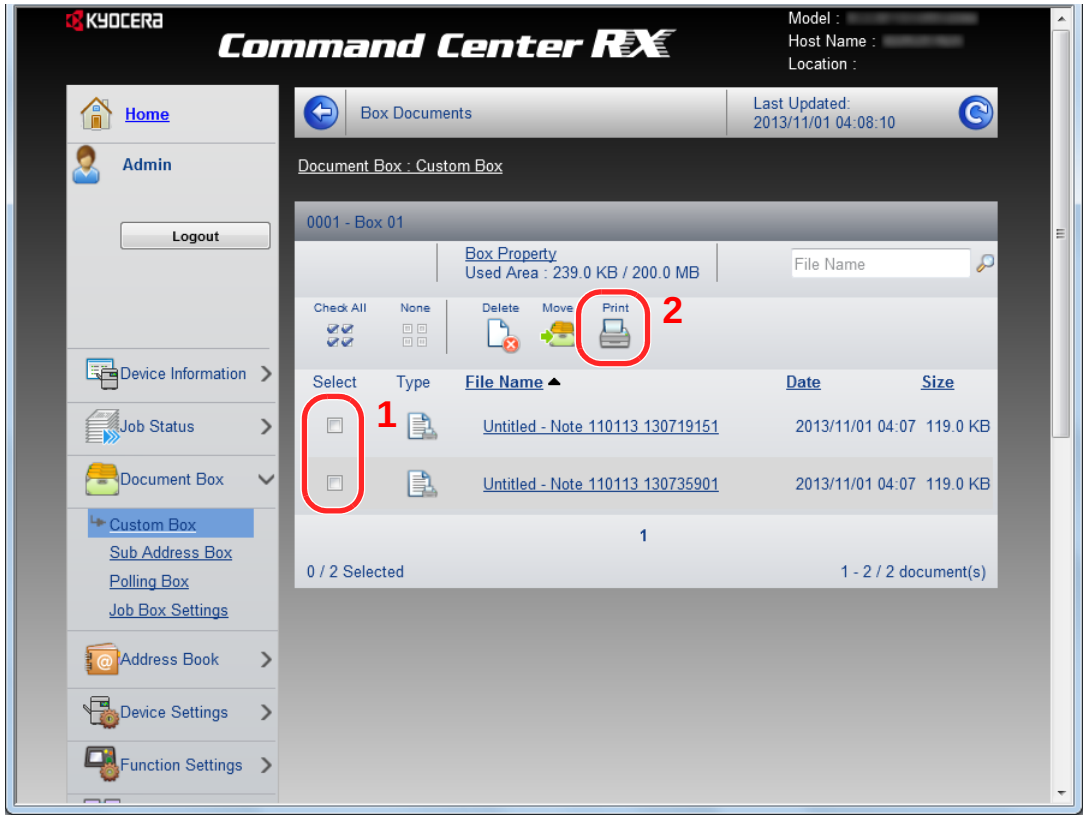

1 Select the document you wish to print.

Select the checkbox of the document to be printed.

2 Click [**Print**].

3 Configure settings for printing, click [**Print**].

Transferring Data from Our Other Products

By using the machine's utility, you can smoothly migrate address books when the machine is to be replaced.

This section explains how to transfer data between our products.

Migrating the Address Book

The Address Book registered on the machine can be backed up or migrated using the KYOCERA Net Viewer on the included DVD.

For details on operating the KYOCERA Net Viewer, refer to the following:

KYOCERA Net Viewer User Guide

Backing Up Address Book Data to PC

1 Launch the KYOCERA Net Viewer.

2 Create a backup.

1 Right-click on the model name from which you want to back up the Address Book, and select [**Advanced**] - [**Set multiple devices**].

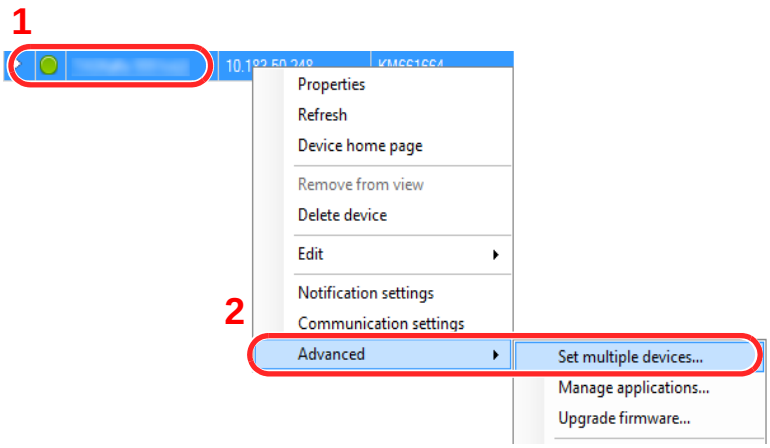

2 Click [**Next**].

3 Select [**Device Address Book**] and click [**Next**].

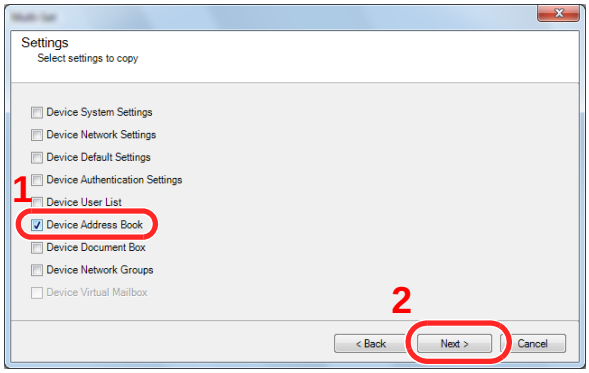

4 Select [**Create from device**] and remove the checkmark from [**Overwrite settings on target device**], and then click [**Next**].

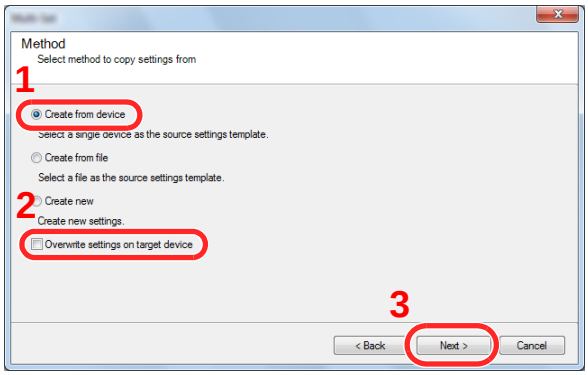

5 Select the model you want to back up, and click [**Next**].

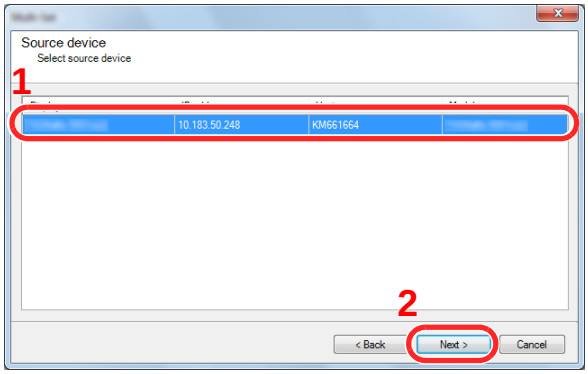

NOTE

If the "Admin Login" screen appears, enter the "Admin Login" and "Login Password", and then click [**OK**]. The default settings are as follows (Upper case and lower case letters are distinguished (case sensitive)).

Login User Name: **Admin**
Login Password: **Admin**

6 Click on [**Save to file**].

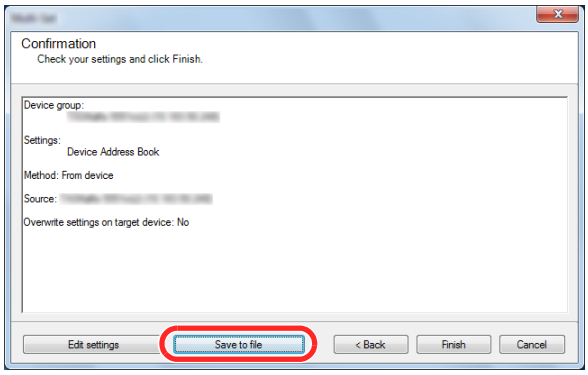

7 Specify the location to save the file, enter the file name, and then click [**Save**].

For "Save as type", make sure to select "XML File".

8 After saving the file, always click [**Cancel**] to close the screen.

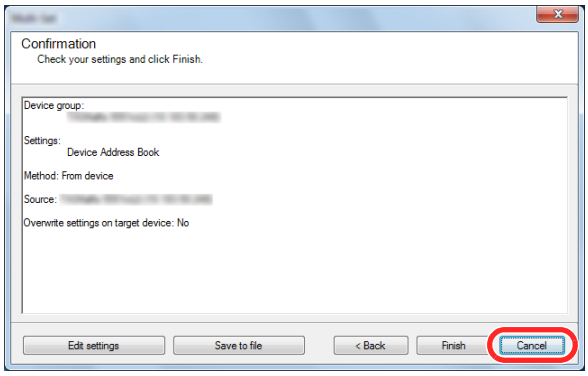

Please note that selecting [**Finish**] will write the data to the machine's Address Book.

Writing Address Book Data to the Machine

1 Launch the KYOCERA Net Viewer.

2 Load the Address Book data.

1 Right-click on the model name to which you want to transfer the Address Book, and select [**Advanced**] - [**Set multiple devices**].

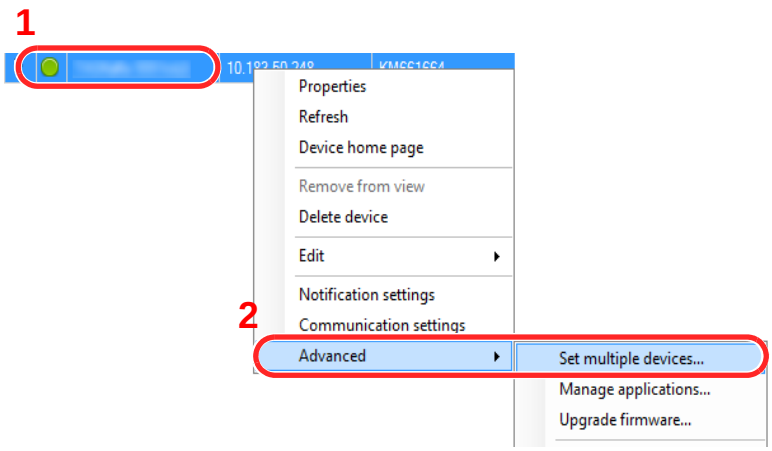

2 Click [**Next**].

3 Select [**Device Address Book**] and click [**Next**].

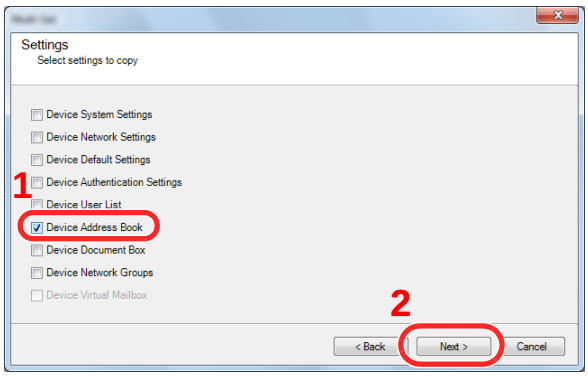

4 Select [**Create from file**] and remove the checkmark from [**Overwrite settings on target device**], and then click [**Next**].

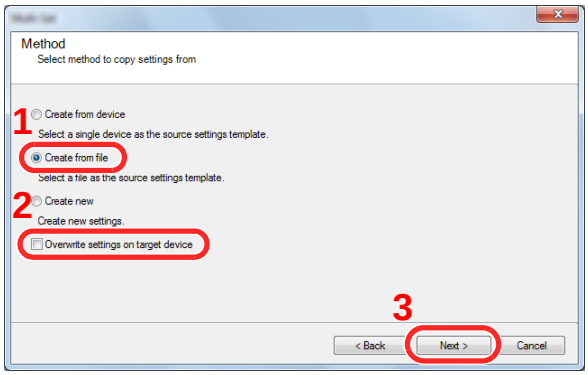

Selecting the [**Overwrite settings on target device**] checkbox will overwrite the machine's Address Book from entry No.1.

5 Click [**Browse**] and select the backup Address Book file, and then click [**Next**].

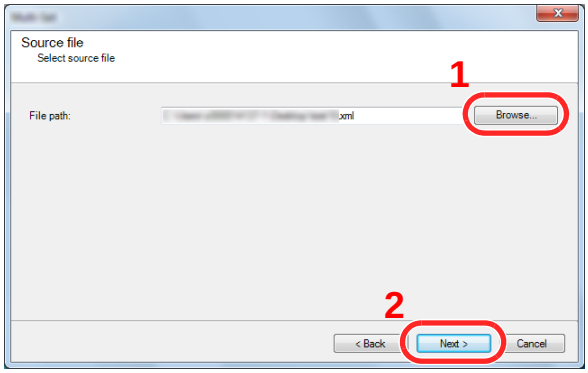

6 Click [**Finish**].

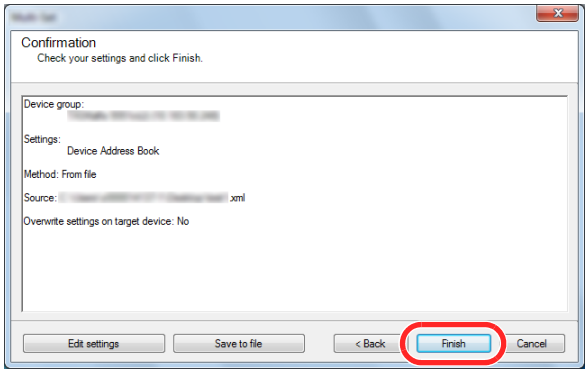

The write process of the Address Book data starts.

7 Once the write process is complete, click [**Close**].

3 Preparation before Use

This chapter explains the following operations.

Loading Paper 3-2
Precaution for Loading Paper 3-2
Selecting the Paper Feeder Units 3-3
Loading in the Cassettes 3-4
Loading in the Large Capacity Feeder 3-8
Paper Stopper 3-10
Envelope Stack Guide 3-10
Stack Level Adjuster 3-11
Preparation for Sending a Document to a Shared Folder in a PC 3-12
Making a note of the computer name and full computer name 3-12
Making a note of the user name and domain name 3-13
Creating a Shared Folder, Making a Note of a Shared Folder 3-14
Configuring Windows Firewall 3-18
Registering Destinations in the Address Book 3-22
Adding a Destination (Address Book) 3-22
Adding a Destination on One Touch Key (One Touch Key) 3-27

Loading Paper

Load paper in the cassettes.

Precaution for Loading Paper

When you open a new package of paper, fan the sheets to separate them slightly prior to loading in the following steps.

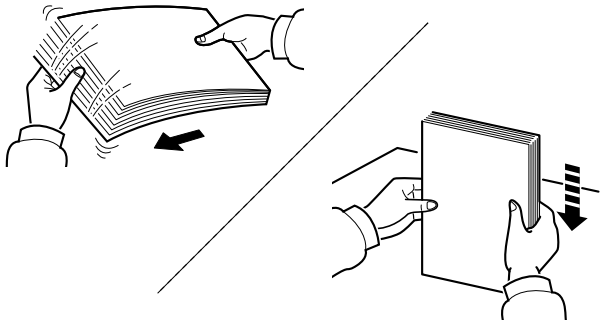

Fan the paper, then tap it on a level surface.

In addition, note the following points.

- If the paper is curled or folded, straighten it before loading. Paper that is curled or folded may cause a jam.
- Avoid exposing opened paper to high humidity as dampness can be a cause of problems. Seal any remaining paper after loading in the multi purpose tray or cassettes back in the paper storage bag.
- Leaving paper in the cassette for a long time may cause a discoloration of paper by heat from the cassette heater.
- If the machine will not be used for a prolonged period, protect all paper from humidity by removing it from the cassettes and sealing it in the paper storage bag.

IMPORTANT

If you copy onto used paper (paper already used for printing), do not use paper that is stapled or clipped together. This may damage the machine or cause poor image quality.

NOTE

If you use special paper such as letterhead, paper with holes or paper with pre-prints like logo or company name, refer to the following:

Paper (page 11-11)

Selecting the Paper Feeder Units

Select the paper feeder units according to the size and type of paper.

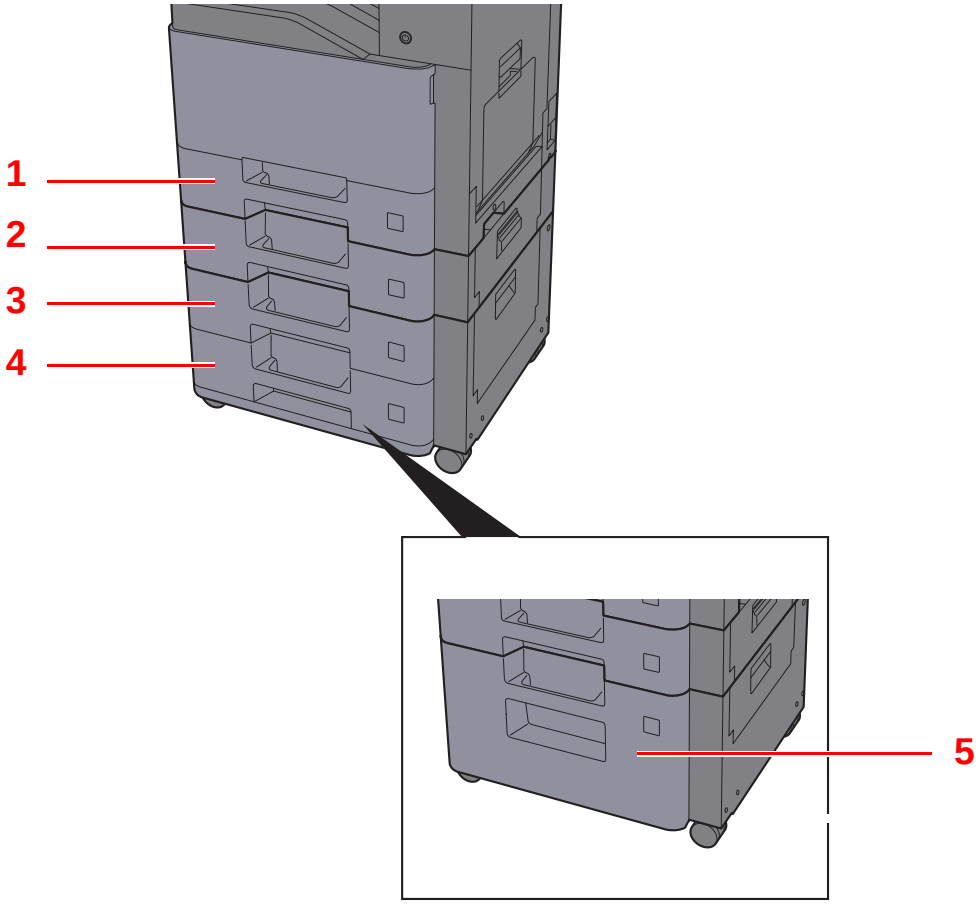

No.	Name	Paper Size	Paper Type	Capacity	Page
1	Cassette 1	A4, B5, A5, A6, B6, Legal, Oficio II, Letter, Executive, Statement, Folio, 16K, 216mm×340mm, Envelope Monarch, Envelope #10, Envelope DL, Envelope C5, Envelope #9, Envelope #6-3/4, B5(ISO), YOUKEI2, YOUKEI4, Custom	Plain, Preprinted, Bond, Recycled, Vellum, Rough, Letterhead, Color, Prepunched, Thick, High Quality, Envelope*1, Custom 1 to 8	500 sheets (80 g/m^2)	page 3-4
2	Cassette 2				
3	Cassette 3				
4	Cassette 4				
5	Cassette 3	A4, Letter		2,000 sheets (80 g/m^2)	page 3-8

*1 Cannot be used for the optional Large Capacity Feeder (2,000-sheet).

NOTE

- The number of sheets that can be held varies depending on your environment and paper type.
- You should not use inkjet printer paper or any paper with a special surface coating. (Such paper may cause paper jams or other faults.)
- For higher quality color printing, use special color paper.

Loading in the Cassettes

Load paper in the cassettes. The procedures here represent the cassette 1.

1 Pull the cassette completely out of the machine.

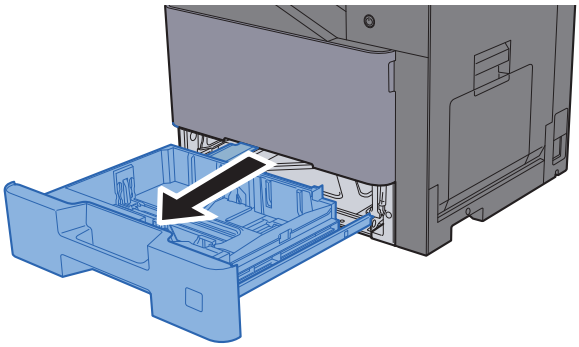

NOTE

Do not pull out more than one cassette at a time.

2 Adjust the paper length guide to the paper size required.

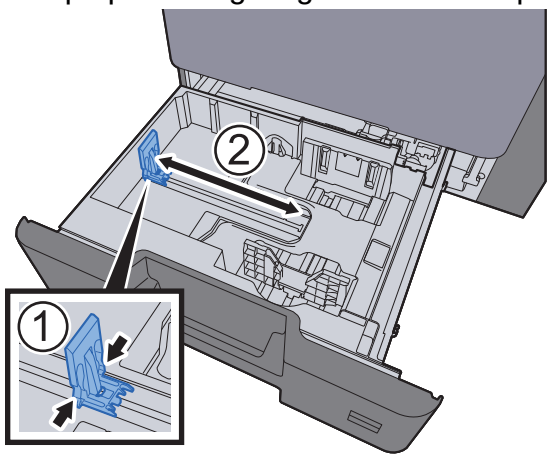

3 Adjust the position of the paper width guides located on the left and right sides of the cassette.

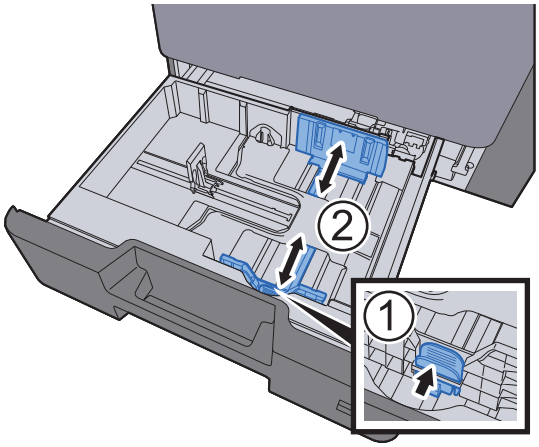

4 Load paper.

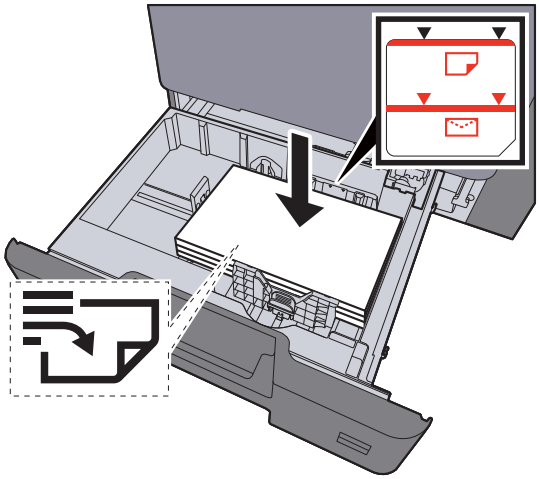

IMPORTANT

- **Load the paper with the print side facing up.**
- **After removing new paper from its packaging, fan the paper before loading it in the multi-purpose tray.**

Loading in the Cassettes (page 3-4)

- **Before loading the paper, be sure that it is not curled or folded. Paper that is curled or folded may cause paper jams.**
- **Ensure that the loaded paper does not exceed the level indicator (see illustration above).**
- **If paper is loaded without adjusting the paper length guide and paper width guide, the paper may skew or become jammed.**

5 Be sure that the paper length and width guides rest securely against the paper. If there is a gap, readjust the guides to fit the paper.

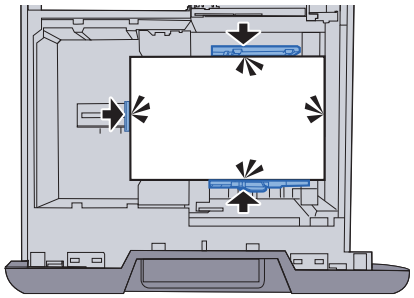

6 Gently push the cassette back in.

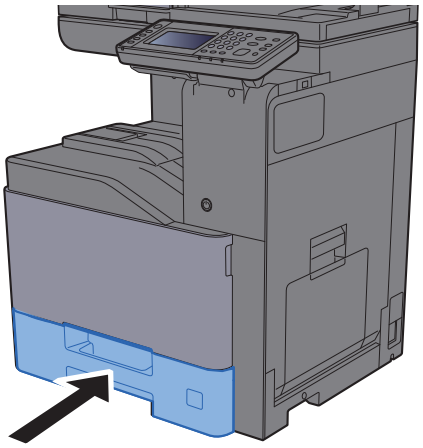

7 Display the screen.

[**System Menu/Counter**] key > [**Cassette/MP Tray Settings**]

8 Configure the function.

Select the paper size and paper type

Cassette 1 (to 4) (page 8-8)

NOTE

- If the size label is required, please contact your dealer or our sales and service representative.
- Paper size can be automatically detected and selected, refer to the following:

Paper Selection (page 6-10)
Cassette 1 (to 4) (page 8-8)

When you load envelopes in the Cassettes

Load envelope in the cassettes. Here, we'll explain the procedures for cassette 1, as an example.

1 Load the envelope with the print side facing up.

Example: When printing the address.

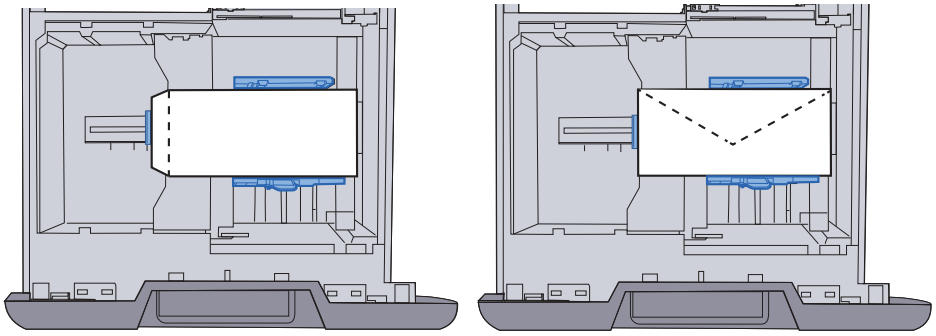

IMPORTANT

How to load envelopes (orientation and facing) will differ depending on the type of envelope. Be sure to load it in correctly, otherwise printing may be done in the wrong direction or on the wrong face.
Ensure that the loaded envelope does not exceed the level indicator.

NOTE

Approximately 50 envelopes can be loaded.

2 Display the screen.

[**System Menu/Counter**] key > [**Cassette/MP Tray Settings**]>"Cassette 1"[**Next**]

3 Configure the function.

Select the paper size and type of envelope.

Cassette 1 (to 4) (page 8-8)

4 Set by using the printer driver on the PC.

Select the paper size and type of envelope using the printer driver on the PC.

Printing on Standard Sized Paper (page 4-4)
Printing on Non-standard Sized Paper (page 4-6)

Loading in the Large Capacity Feeder

Load paper in the large capacity feeder.

1 Pull the cassette completely out of the machine.

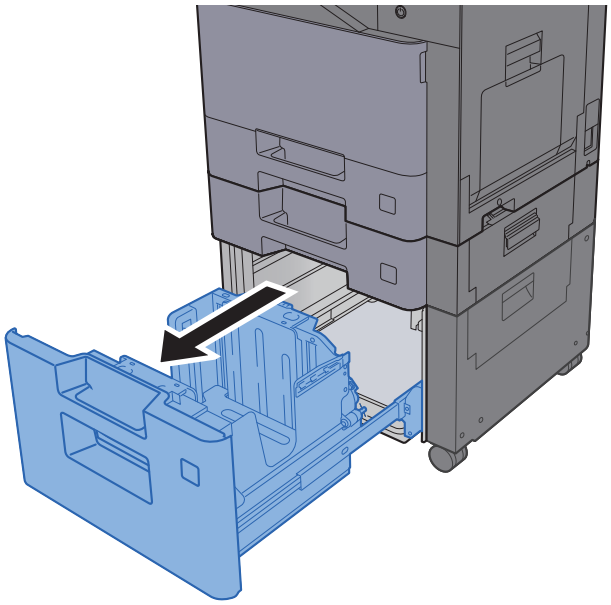

NOTE

Do not pull out more than one cassette at a time.

2 Load paper.

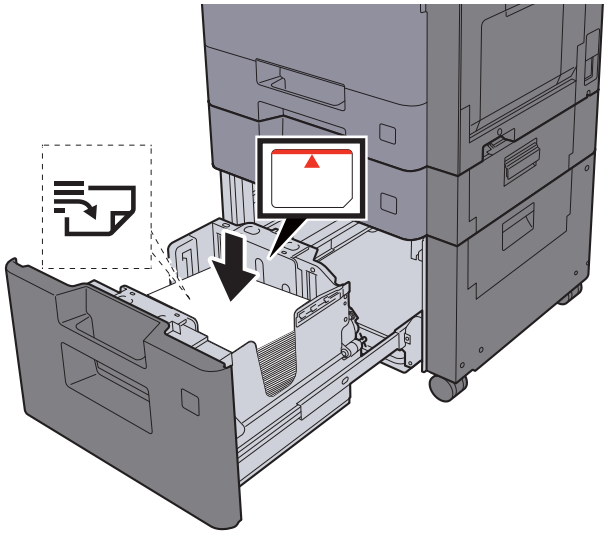

IMPORTANT

- **Load the paper with the print side facing up.**
- **After removing new paper from its packaging, fan the paper before loading it in the multi-purpose tray.**

Loading in the Cassettes (page 3-4)

- **Before loading the paper, be sure that it is not curled or folded. Paper that is curled or folded may cause paper jams.**
- **Ensure that the loaded paper does not exceed the level indicator (see illustration above).**

3 Gently push the cassette back in.

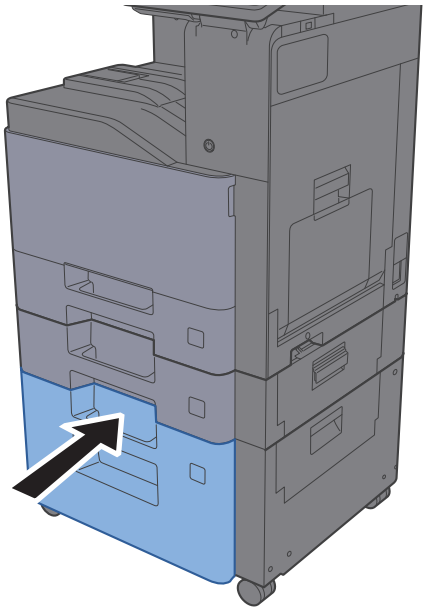

4 Display the screen.

[**System Menu/Counter**] key > [**Cassette/MP Tray Settings**]

5 Select a function.

Select [**Cassette 3**].

6 Configure the function.

Select the paper type

Cassette 1 (to 4) (page 8-8)

Paper Stopper

When using paper large than A4/Letter, open the paper stopper shown in the figure.

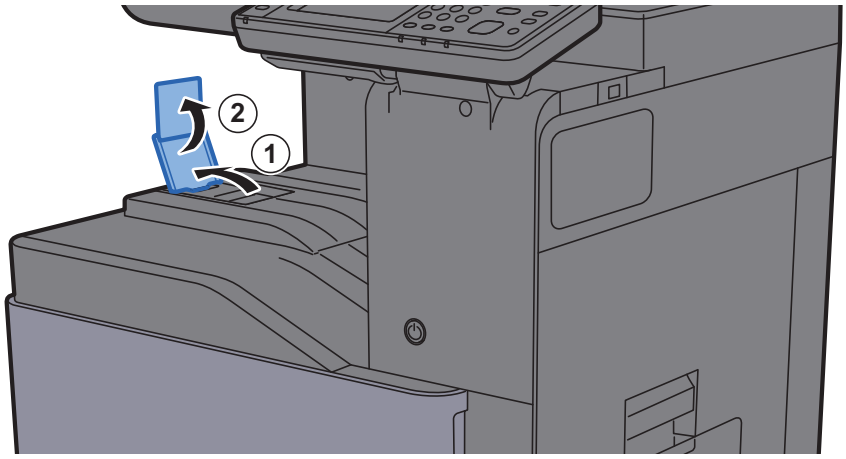

Envelope Stack Guide

To use an envelope, open the Envelope Stack Guide as shown below.

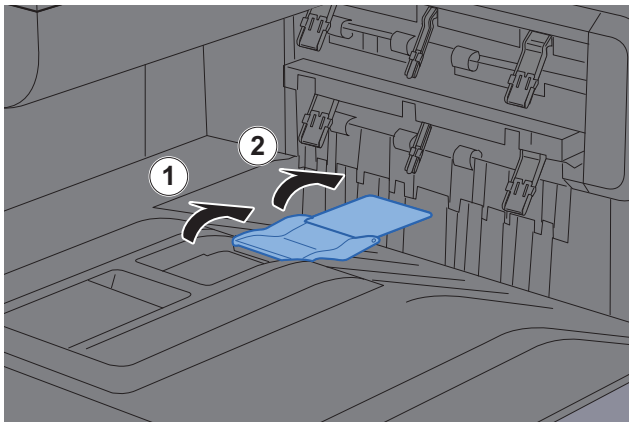

Stack Level Adjuster

If output paper curls noticeably, extend the Stack Level Adjuster as shown.

Extending the Stack Level Adjuster

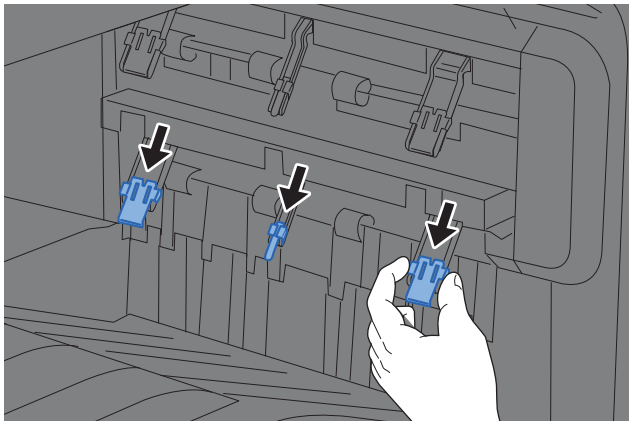

Restoring the Stack Level Adjuster

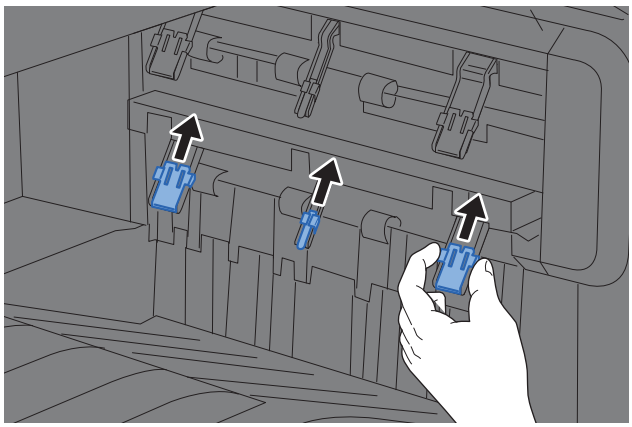

NOTE

When using the Job Separator for output, you can if needed extend the Stack Level Adjuster on the Job Separator.

Preparation for Sending a Document to a Shared Folder in a PC

Check the information that needs to be set on the machine and create a folder to receive the document on your computer. Screens of Windows 7 are used in the following explanation. The details of the screens will vary in other versions of Windows.

NOTE
Log on to Windows with administrator privileges.

Making a note of the computer name and full computer name

Check the name of the computer name and full computer name.

1 Display the screen.

From [**Start**] button on the Windows, select [**Computer**] and then [**System Properties**].

NOTE
In Windows XP, right-click [**My Computer**] and select [**Properties**]. The [**System Properties**] dialog box appears. Click the [**Computer Name**] tab in the window that appears.
In Windows 8, select the desktop in the Start screen, right-click [**Computer**] from [**Libraries**], and then select [**Properties**].
In Windows 8.1, select the desktop in the Start screen, right-click [**PC**] from the desktop [**Explorer**] and select [**Properties**]. Or, right-click the Window icon and select [**System**].

2 Check the computer name.

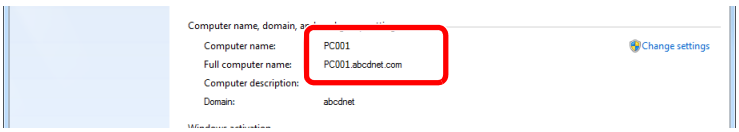

Check the computer name and full computer name.

Screen example:
Computer name: PC001
Full computer name: PC001.abcdnet.com

Windows XP:

If the full computer name does not have a dot (.), the full computer name and the computer name are the same.
If the full computer name has a dot (.), the text string in front of the dot (.) in the full computer name is the computer name.

Example: PC001.abcdnet.com
PC001 is the computer name
PC001.abcdnet.com is the full computer name

After checking the computer name, click the [**Close**] button to close the "**System Properties**" screen.

In Windows XP, after checking the computer name, click the [**Cancel**] button to close the "**System Properties**" screen.

Making a note of the user name and domain name

Check the domain name and user name for logging onto Windows.

1 Display the screen.

From [**Start**] button on the Windows, select [**All Programs**] (or [**Programs**]), [**Accessories**] and then [**Command Prompt**].
In Windows 8, display [**Apps**] on [**Search**] in charms on the Start screen, and select [**Command Prompt**].

The Command Prompt window appears.

2 Check the domain name and user name.

At the Command Prompt, enter "net config workstation" and then press [**Enter**].

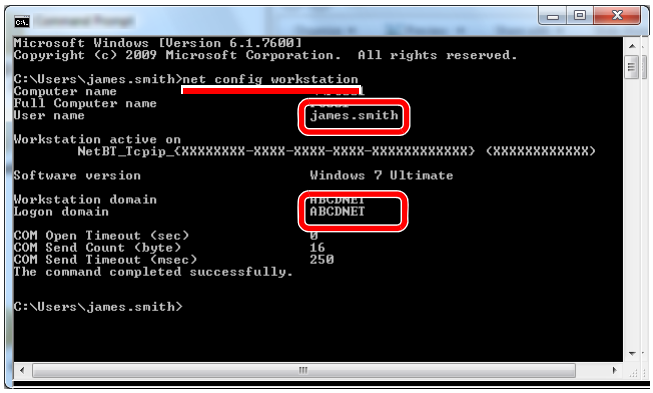

Check the user name and domain name.

Screen example:
User Name: james.smith
Domain Name: ABCDNET

Creating a Shared Folder, Making a Note of a Shared Folder

Create a shared folder to receive the document in the destination computer.

NOTE

If there is a workgroup in System Properties, configure the settings below to limit folder access to a specific user or group.

1 From [**Start**] button on the Windows, select [**Control Panel**], [**Appearance and Personalization**], and then [**Folder Options**].

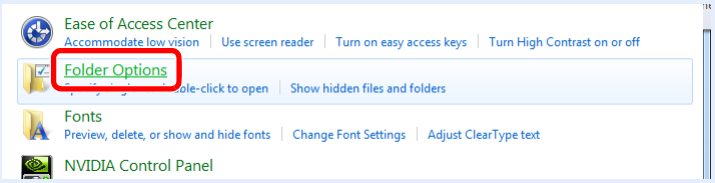

In Windows XP, click [**My Computer**] and select [**Folder Options**] in [**Tools**].

In Windows 8, select [**Settings**] in charms on Desktop, and select [**Control Panel**], [**Appearance and Personalization**], and then [**Folder Options**].

2

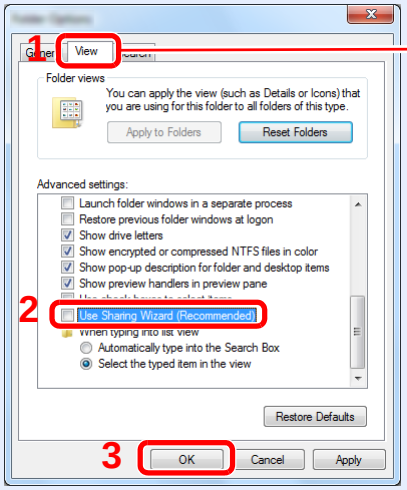

Make sure that the [**View**] tab is selected.

Remove the checkmark from [**Use Sharing Wizard (Recommended)**] in "Advanced settings".

In Windows XP, click the [**View**] tab and remove the checkmark from [**Use Simple File Sharing (Recommended)**] in "Advanced settings".

1 Create a folder.

1 Create a folder on your computer.

For example, create a folder with the name **"scannerdata"** on the desktop.



2 **Right-click the "scannerdata"** folder and click [**Share**] and [**Advanced sharing**]. Click the [**Advanced Sharing**] button.

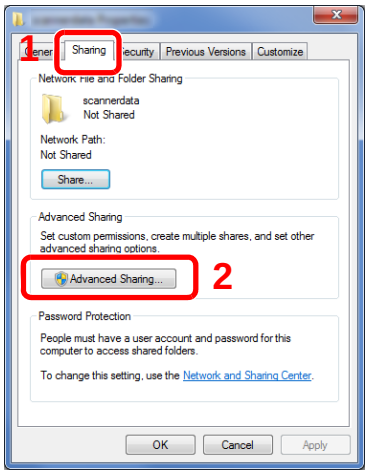

In Windows XP, right-click the "scannerdata" folder and select [**Sharing and Security**] (or [**Sharing**]).

2 Configure permission settings.

1 Select the [**Share this folder**] checkbox and click the [**Permissions**] button.

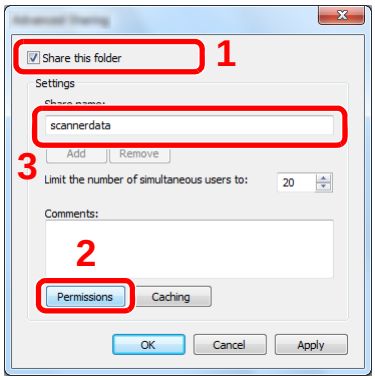

In Windows XP, select [**Share this folder**] and click the [**Permissions**] button.

2 Make a note of the [**Share name**].

3 Click the [**Add**] button.

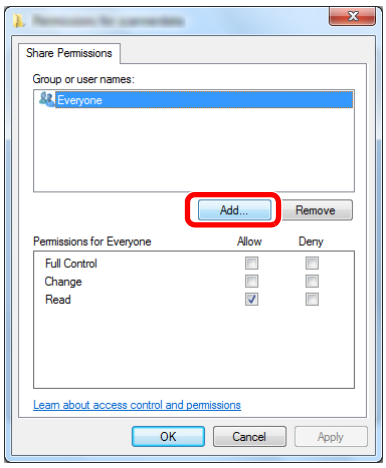

4 Specify the location.

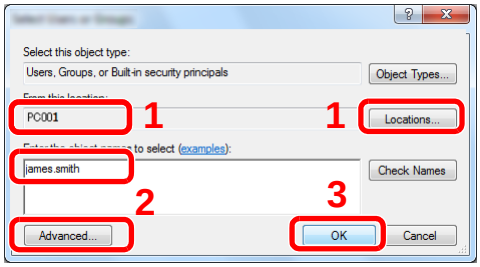

1 If the computer name that you made a note of on page is the same as the domain name:
If the computer name is not shown in "From this location", click the [**Locations**] button, select the computer name, and click the [**OK**] button.
Example: PC001
If the computer name that you made a note of on page is not the same as the domain name:
If the text after the first dot (.) in the full computer name that you made a note of does not appear in "From this location", click the [**Locations**] button, select the text after the dot (.), and click the [**OK**] button.
Example: abcdnet.com

2 Enter the user name that you made a note of on page in the text box, and click the [**OK**] button.
Also the user name can be made by clicking the [**Advanced**] button and selecting a user.

5 Set the access permission for the user selected.

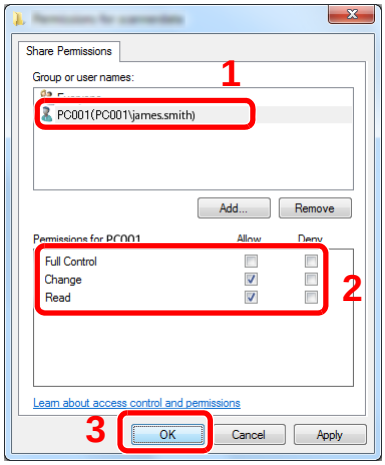

1 Select the user you entered.

2 Select the [**Allow**] checkbox of the "Change" and "Read" permissions

3 Press [**OK**].

In Windows XP, go to step 6.

NOTE

"**Everyone**" gives sharing permission to everyone on the network. To strengthen security, it is recommended that you select "**Everyone**" and remove the "**Read**" [**Allow**] checkmark.

6 Click the [**OK**] button in the "**Advanced Sharing**" screen to close the screen.

7 Check the details set in the [**Security**] tab.

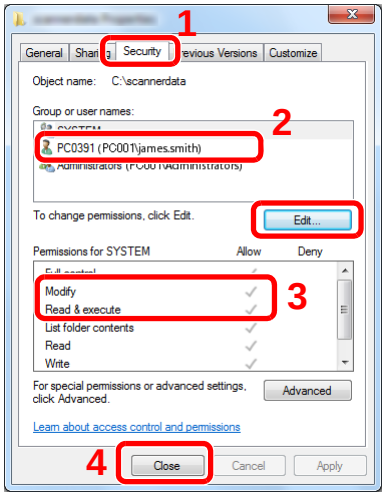

1 Select the [**Security**] tab.

2 Select the user you entered.
If the user does not appear on "Group or user names", click [**Edit**] button to add user in a similar way of "configuration of permission settings".

3 Make sure that checkmarks appear on [**Allow**] checkbox for the "**Modify**" and "**Read & execute**" permissions.

4 Click the [**Close**] button.

In Windows XP, make sure that checkmarks appear on [**Allow**] checkbox for the "**Modify**" and "**Read & execute**" permissions, and click the [**OK**] button.

Configuring Windows Firewall

Permit sharing of files and printers and set the port used for SMB transmission.

NOTE

Log on to Windows with administrator privileges.

1 Check file and printer sharing.

1 From [**Start**] button on the Windows, select [**Control Panel**], [**System and Security**], and [**Allow a program through Windows Firewall**].

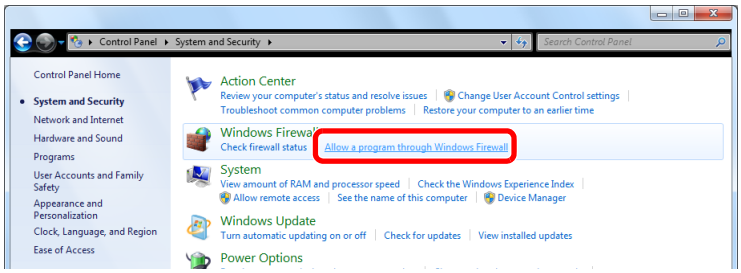

NOTE

If the User Account Control dialog box appears, click the [**Continue**] button.

2 Select the [**File and Printer Sharing**] checkbox.

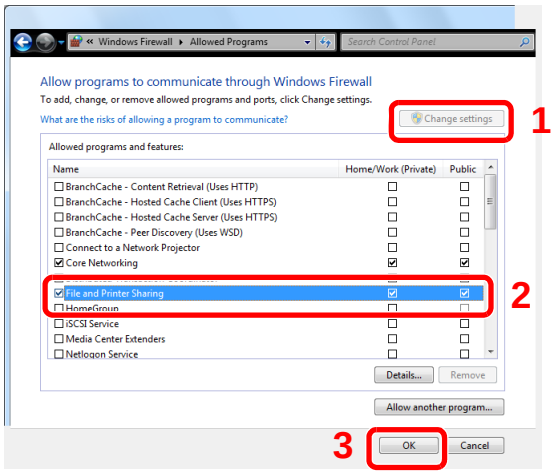

2 Add a port.

1 From [**Start**] button on the Windows, select [**Control Panel**], [**System and Security**], and [**Check firewall status**].

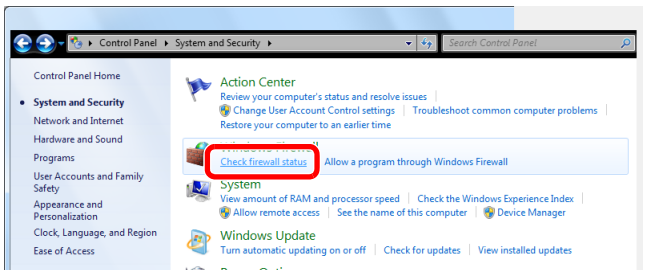

2 Select [**Advanced settings**].

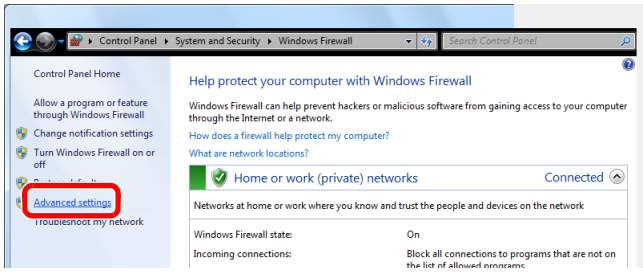

3 Select [**Inbound Rules**].

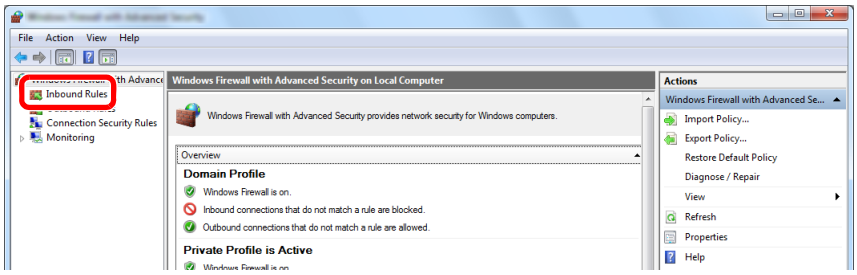

4 Select [**New Rules**].

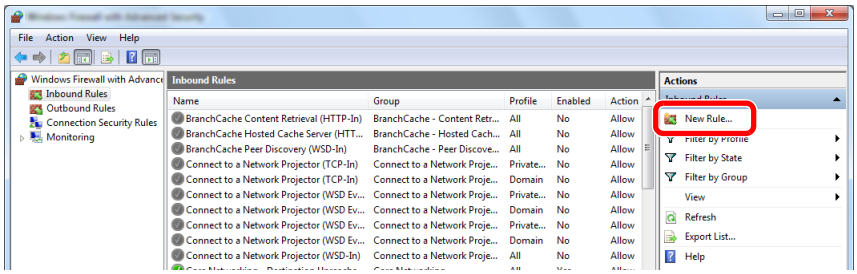

5 Select [**Port**].

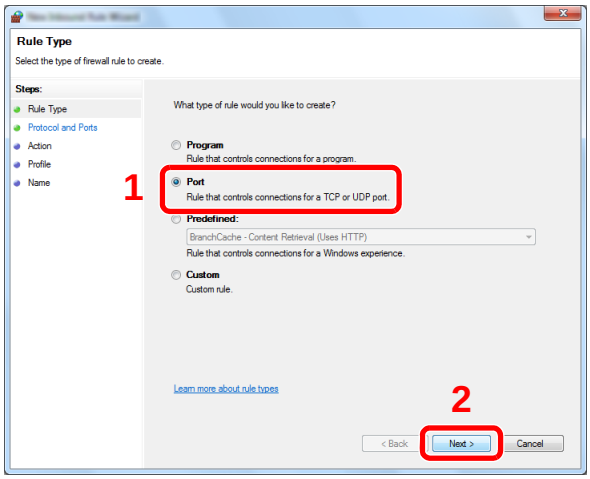

6 Select [**TCP**] as the port to apply the rule to. Then select [**Specific local ports**] and enter "445" then click [**Next**].

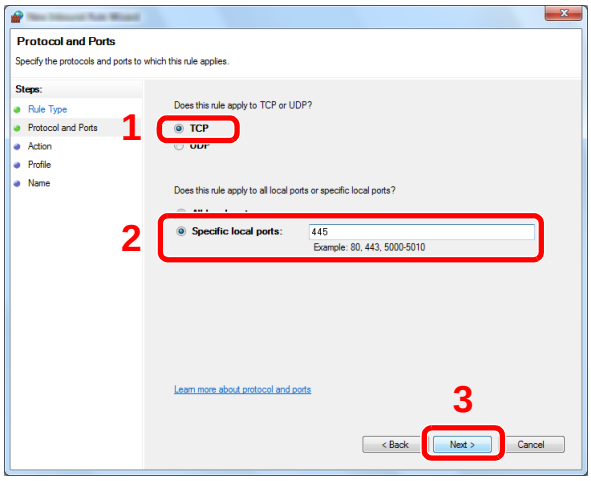

7 Select [**Allow the connection**] and click the [**Next**] button.

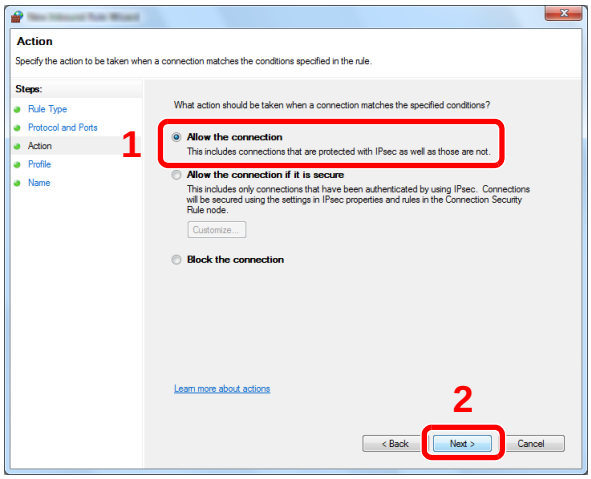

8 Make sure all checkboxes are selected and click the [**Next**] button.

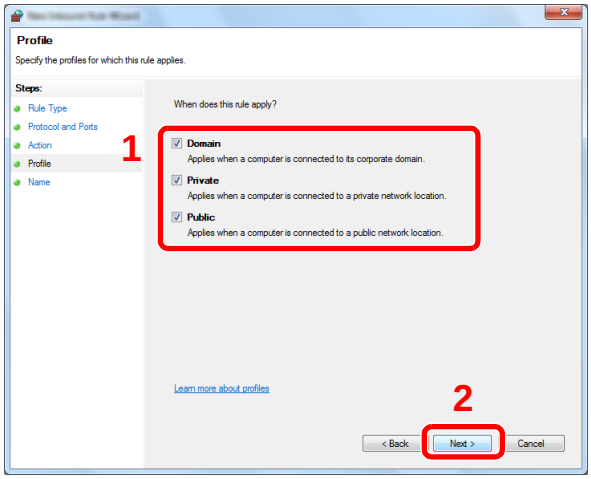

9 Enter **"Scan to SMB"** in "**Name**" and click [**Finish**].

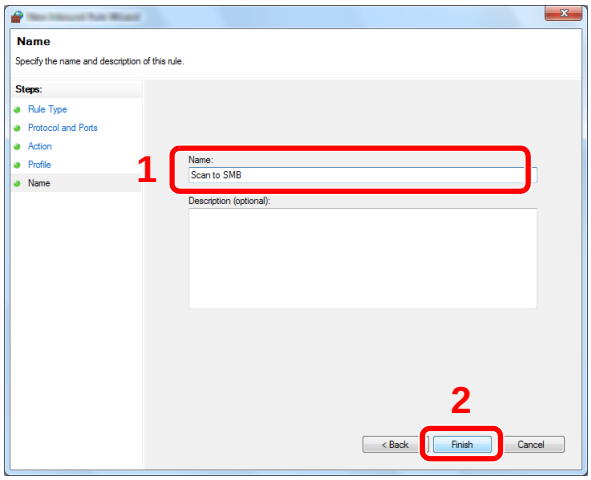

In Windows XP or Windows Vista

1 In Windows XP, from [**Start**] button on the Windows, select [**Control Panel**], and then [**Windows Firewall**].
In Windows Vista, from [**Start**] button on the Windows, select [**Control Panel**], [**Security**], and then [**Turn Windows Firewall on or off**].
If the User Account Control dialog box appears, click the [**Continue**] button.

2 Click the [**Exceptions**] tab and then the [**Add port...**] button.

3 Specify Add a Port settings.
Enter any name in "**Name**" (example: Scan to SMB). This will be the name of the new port.
Enter "445" in "**Port Number**". Select [**TCP**] for "**Protocol**".

4 Click [**OK**] button.

In Windows 8

1 In charms on Desktop, click [**Settings**], [**Control Panel**], [**System and Security**], and then [**Windows Firewall**].
If the User Account Control dialog box appears, click the [**Continue**] button.

2 Configure the settings

➡ Configuring Windows Firewall (page 3-18)

Registering Destinations in the Address Book

Save frequently used destinations to the Address Book or One Touch Keys. The saved destinations can be changed. The destinations are available for Send as E-mail, Send to Folder, and Fax Transmission (Only on products with the fax function installed).

NOTE

Registering and editing of the Address Book can also be done in Command Center RX.

Registering Destinations (page 2-56)

Adding a Destination (Address Book)

Add a new destination to the Address Book. There are two registering methods, contacts and groups. When adding a group, enter the group name and select group members from the Address Book.

NOTE

If user login administration is enabled, you can only edit destinations in the Address Book by logging in with administrator privileges.

Registering a contact address

A maximum of 200 contact addresses can be registered. Each address can include the information such as destination name, E-mail address, FTP server folder path, computer folder path, and FAX No. (Only on products with the fax function installed).

1 Display the screen.

[**System Menu/Counter**] key > [**Address Book/One Touch**] > [**Address Book**] > [➕] > [**Contact**]

2 Add the name.

Enter the destination name to be displayed on the Address Book > [**Next**]

NOTE

Up to 32 characters can be entered.
Refer to the following for details on entering characters.

Character Entry Method (page 11-8)

3 Add the address.

E-mail Address

[**E-mail Address**] > Enter the E-mail address > [**OK**]

NOTE

Up to 128 characters can be entered.
Refer to the following for details on entering characters.

Character Entry Method (page 11-8)

The Folder (SMB) Address

[**SMB**] > [**Host Name**], [**Path**], [**Port**], [**Login User Name**] and [**Login Password**] > [**OK**]

NOTE

For the computer name, share name, domain name, and user name, enter the information that you noted when you created the shared folder. For details on creating shared folders, refer to the following:

Preparation for Sending a Document to a Shared Folder in a PC (page 3-12)

The table below explains the items to be entered.

Item	Description	Max. No. of Characters
Host Name	Computer name	Up to 64 characters
Path	Share name For example: scannerdata If saving in a folder in the shared folder: share name\folder name in shared folder	Up to 128 characters
Port	Port number (Normally 445.)	1 - 65535
Login User Name	If the computer name and domain name are the same: User Name For example: james.smith If the computer name and domain name are different: Domain name\User name For example: abcdnet\james.smith	Up to 64 characters
Login Password	Windows logon password (Case sensitive.)	Up to 64 characters

To search for a folder on a PC on the network, select in the following order.

[**Menu**] > [**Search Folder from Network**] or [**Search Folder by Host Name**]

If you selected [**Search Folder from Network**], you can search all PCs on the network for a destination.

If you selected [**Search Folder by Host Name**], you can enter the "Domain/Workgroup Name", and "Host Name" to search PCs on the network for the destination.

Up to 500 addresses can be displayed. The login user name and login password entry screen appears.

Select the host name (PC name) that you want to specify in the screen that appears > [**Next**].

NOTE

- Refer to the following for details on entering characters.

Character Entry Method (page 11-8)

- Select [**Menu**] > [**Connection Test**] to check the connection to the server you chose. If the connection fails, check the entries you made.

The Folder (FTP) Address

[**FTP**] > [**Host Name**], [**Path**], [**Port**], [**Login User Name**] and [**Login Password**] > [**OK**]
The table below explains the items to be entered.

Item	Descriptions	Max. No. of Characters
Host Name	Host name or IP address of FTP server	Up to 64 characters
Path[*1]	Path for the file to be stored For example: User\ScanData If no path is entered, the file is stored in the home directory.	Up to 128 characters
Port	Port number (Normally 21.)	1 - 65535
Login User Name	FTP server login user name	Up to 64 characters
Login Password	FTP server login password	Up to 64 characters

*1 When the FTP server is based on Linux/UNIX, the path including the sub-folder is combined by the slash "/" not using the back-slash.

NOTE

- Refer to the following for details on entering characters.

Character Entry Method (page 11-8)

- Select [**Menu**] > [**Connection Test**] to check the connection to the FTP server you chose. If the connection fails, check the entries you made.

1 To specify the Address Number, select [**Address Number**].

2 Use [**+**] / [**-**] or the numeric keys to enter an address number (001 to 250).

To have the number assigned automatically, enter "000".

NOTE

- Address Number is an ID for a destination. A free number can be selected.
- If you specify an address number that is already in use, an error message appears.

3 Select [**OK**].

4 Check if the destination entry is correct > [**Save**]

The destination is added to the Address Book.

Registering a Group

Compile two or more contacts into a group. Designations in the group can be added at the same time. When adding a group, a maximum of 50 groups can be added in the Address Book.

NOTE
To add a group, you need individually added destinations. Register one or more individual destinations as needed before proceeding. Up to 100 individually registered destinations and a combined total of up to 5 SMB and FTP destination folders can be registered in a single group.

1 Display the screen.

[**System Menu/Counter**] key > [**Address Book/One Touch**] > [**Address Book**] > [➕] > [**Group**]

2 Add the name.

Enter the group name to be displayed on the Address Book > [**Next**]

NOTE
Up to 32 characters can be entered.
Refer to the following for details on entering characters.

Character Entry Method (page 11-8)

3 Select the members (destinations).

1 Select [**Member**].

2 Select [➕].

3 Select destinations (contacts) to add to the group. The selected destinations are indicated by a checkmark in the check box.

NOTE
Destinations can be sorted or searched by destination name or address number.

Specifying Destination (page 5-35)

4 Select [**OK**].

If you have more destinations to add, repeat Steps 2 to 4.

5 Select [**End**].

6 To specify the Address Number, select [**Address Number**].

7 Use [**+**] / [**-**] or the numeric keys to enter an address number (001 to 250).

To have the number assigned automatically, enter "000".

NOTE
- Address Number is an ID for a destination. A free number can be selected.
- If you specify an address number that is already in use, an error message appears.

8 Select [**OK**].

9 Check if the selected destination was added to the group > [**Save**]

The group is added to the Address Book.

Editing and Deleting Address Book Entries

Edit and delete the destinations (contacts) you added to the Address Book.

1 Display the screen.

[**System Menu/Counter**] key > [**Address Book/One Touch**] > [**Address Book**]

2 Edit or delete the destination.

NOTE

Destinations can be sorted or searched by destination name or address number.

Specifying Destination (page 5-35)

Editing a Contact

1 Select [ ] for the destination (contacts) to edit.

2 Change "Name", "Address Number" and destination type and address.

Registering a contact address (page 3-22)

3 After you have completed the changes, [**Save**] > [**Yes**]

Register the changed destination.

Editing a Group

1 Select [ ] for the group to edit.

2 Change "Name" and "Address Number".

Registering a Group (page 3-25)

3 Select [**Member**].

4 To delete any destination from the group, select the destination > [ ] > [**Yes**]

To add the destination, select [ ].

5 After you have completed the changes, [**Save**] > [**Yes**]

Register the changed group.

Deleting a Contact or Group

Select a destination or group to delete > [ ] > [**Yes**]

Adding a Destination on One Touch Key (One Touch Key)

Assign a new destination (contact or group) to an one touch key. A maximum of 100 destinations can be registered.

NOTE

- Refer to the following for use of One Touch Key.

Specifying Destination (page 5-35)

- You can add One Touch keys and change their settings on Command Center RX.

Registering Destinations (page 2-56)

1 Display the screen.

[**System Menu/Counter**] key > [**Address Book/One Touch**] > [**One Touch Key**]

2 Add One Touch Keys.

1 Select a One Touch Key number (001 to 100) for the destination > [+]
Selecting the [**Quick No. Search**] key enables direct entry of a One Touch Key number.

Select a One Touch Key with no registered destination.

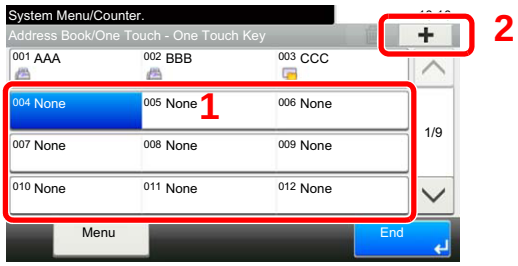

2 Select a destination (contact or group) to add to the One Touch Key number > [**Next**]

Selecting [ ] shows the detailed information of the selected destination.

NOTE

Destinations can be sorted or searched by destination name or address number.

Specifying Destination (page 5-35)

3 Enter the One Touch Key name displayed in the send base screen > [**Next**]

NOTE

Up to 24 characters can be entered.
Refer to the following for details on entering characters.

Character Entry Method (page 11-8)

4 Select [**Save**].

The destination will be added to the One Touch Key.

Editing and Deleting One Touch Key

Edit and delete the destinations you added to One Touch Key.

1 Display the screen.

1 [**System Menu/Counter**] key > [**Address Book/One Touch**] > [**One Touch Key**]

2 Select a One Touch Key number (001 to 100) to edit. Selecting the [**Quick No. Search**] key enables direct entry of a One Touch Key number.

The procedure differs depending on the details to be edited.

2 Edit and delete the destinations you added to One Touch Key.

Changing the Registered Information

1 [**Menu**] > [**Edit**] > [**Destination**]

2 Select a new destination (contact or group). Selecting [ ] shows the detailed information of the selected destination.

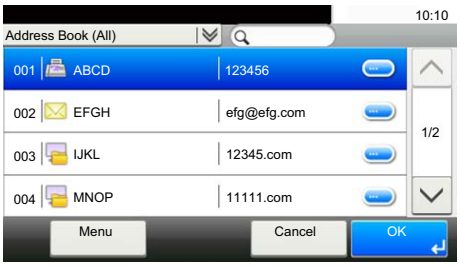

NOTE

Destinations can be sorted or searched by destination name or address number.

Specifying Destination (page 5-35)

3 [**OK**] > [**Save**] > [**Yes**]

Add the destination to the One Touch Key.

Deleting the Registered Information

1 Select [ ].

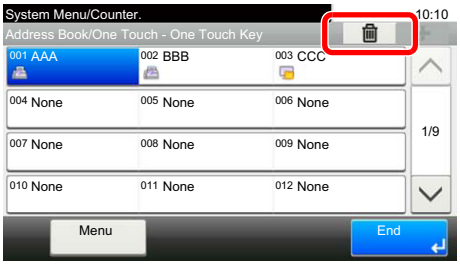

2 Select [**Yes**].

Deletion of the data registered in the One Touch Key.

4 Printing from PC

This chapter explains the following topics:

Printer Driver Print Settings Screen 4-2
Displaying the Printer Driver Help 4-3
Changing the Default Printer Driver Settings (Windows 7) 4-3
Printing from PC 4-4
Printing on Standard Sized Paper 4-4
Printing on Non-standard Sized Paper 4-6
Canceling Printing from a Computer 4-8
Printing from the Handheld Device 4-9
Printing by AirPrint 4-9
Printing by Google Cloud Print 4-9
Printing by Mopria 4-9
Printing Data Saved in the Printer 4-10
Specifying the Job Box from a Computer and Storing the Job 4-10
Printing Documents from Private Print Box 4-11
Deleting the Documents Stored in the Private Print Box 4-11
Printing Document from Stored Job Box 4-12
Deleting the Documents Stored in the Stored Job Box 4-12
Printing Document from Quick Copy Box 4-13
Deleting the Documents Stored in the Quick Copy Box 4-13
Printing Document from Proof and Hold Box 4-14
Deleting the Documents Stored in the Proof and Hold Box 4-14
Monitoring the Printer Status (Status Monitor) 4-15
Accessing the Status Monitor 4-15
Exiting the Status Monitor 4-15
Quick View State 4-15
Printing Progress Tab 4-16
Paper Tray Status Tab 4-16
Toner Status Tab 4-16
Alert Tab 4-17
Status Monitor Context Menu 4-17
Status Monitor Notification Settings 4-18

Printer Driver Print Settings Screen

The printer driver print settings screen allows you to configure a variety of print-related settings.

Printer Driver User Guide

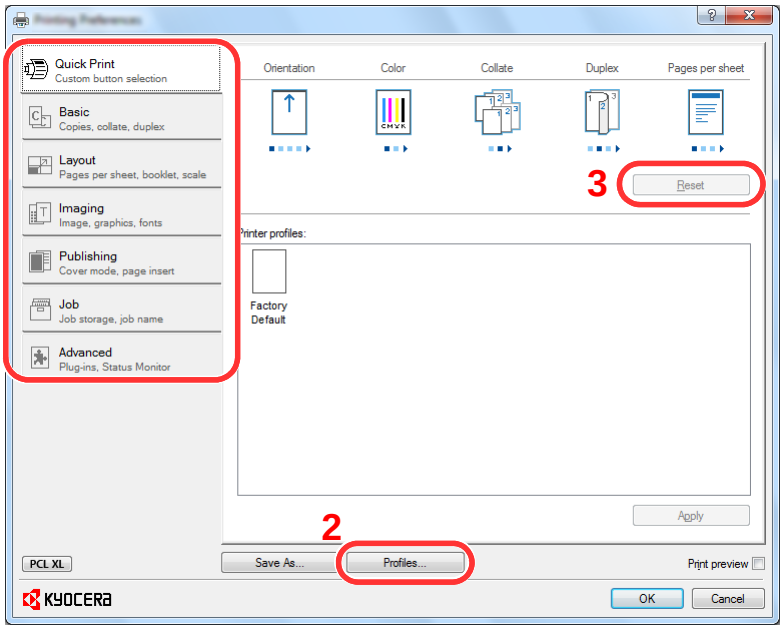

No.	Description
1	**[Quick Print] tab** Provides icons that can be used to easily configure frequently used functions. Each time you click an icon, it changes to an image resembling the print results and applies the settings. 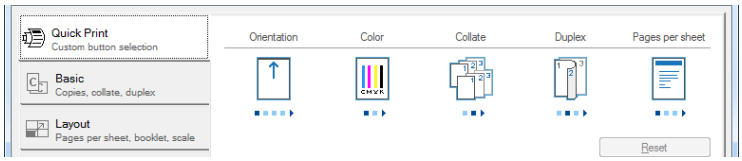 **[Basic] tab** This tab groups basic functions that are frequently used. You can use it to configure the paper size, destination, and duplex printing. **[Layout] tab** This tab lets you configure settings for printing various layouts, including booklet printing, combine mode, poster printing, and scaling. **[Imaging] tab** This tab lets you configure settings related to the quality of the print results. **[Publishing] tab** This tab lets you create covers and inserts for print jobs and put inserts between sheets of OHP film. **[Job] tab** This tab lets you configure settings for saving print data from the computer to the machine. Regularly used documents and other data can be saved to the machine for easy printing later. Since saved documents can be printed directly from the machine, this function is also convenient when you wish to print a document that you don't want others to see. **[Advanced] tab** This tab lets you configure settings for adding text pages or watermarks to print data.
2	**[Profiles]** Printer driver settings can be saved as a profile. Saved profiles can be recalled at any time, so it's a convenient practice to save frequently used settings.
3	**[Reset]** Click to revert settings to their initial values.

Displaying the Printer Driver Help

The printer driver includes Help. To learn about print settings, open the printer driver print settings screen and display Help as explained below.

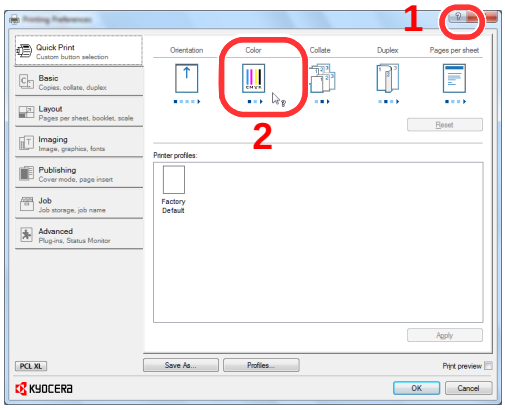

1 Click the [**?**] button in the upper right corner of the screen.

2 Click the item you want to know about.

NOTE

You can also display the printer driver help when you click the desired item and press the [**F1**] key on your keyboard.

Changing the Default Printer Driver Settings (Windows 7)

The default printer driver settings can be changed. By selecting frequently used settings, you can omit steps when printing. For the settings, refer to the following:

Printer Driver User Guide

1 Click [Start] button on the Windows, and then click [Devices and Printers].

2 Right-click the printer driver icon of the machine, and click the [Printer properties] menu of the printer driver.

3 Click the [Basic] button on the [General] tab.

4 Select the default settings and click the [OK] button.

Printing from PC

Follow the steps below to print documents from applications.

This section provides the printing method using the KX DRIVER.

NOTE

- To print the document from applications, install the printer driver on your computer from the supplied DVD (Product Library).
- In some environments, the current settings are displayed at the bottom of the printer driver.

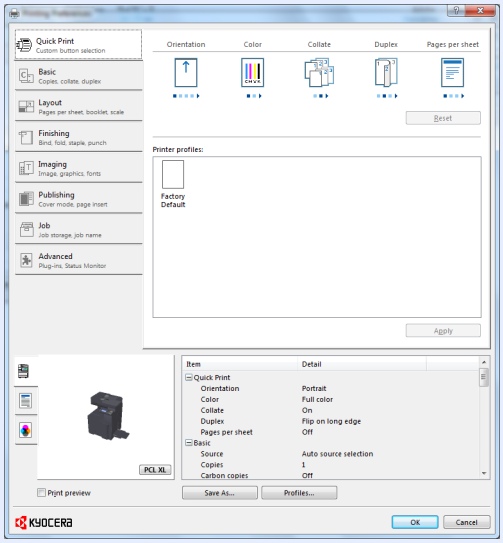

- When printing the cardstock or envelopes, load the cardstock or envelopes in the multi purpose tray before performing the following procedure.

Loading Paper in the Multi Purpose Tray (page 5-5)

Printing on Standard Sized Paper

If you loaded a paper size that is included in the print sizes of the machine, select the paper size in the [**Basic**] tab of the print settings screen of the printer driver.

1 Display the screen.

Click [**File**] and select [**Print**] in the application.

2 Configure the settings.

1 Select the machine from the "Name" menu and click the [**Properties**] button.

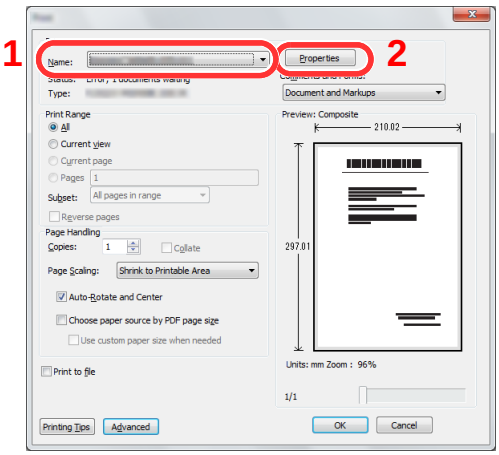

2 Select the [**Basic**] tab.

3 Click "Print size" menu and select the paper size to use for printing.

To load the paper of size that is not included in print sizes of the machine such as cardstock or envelopes, the paper size needs to be registered.

Printing on Non-standard Sized Paper (page 4-6)

To print on the special paper such as thick paper or transparency, click "Media type" menu and select the media type.

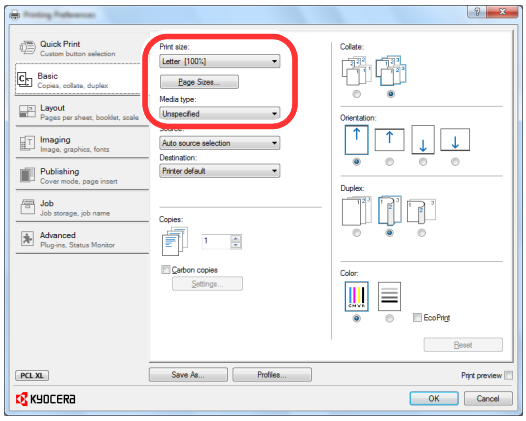

4 Click [**OK**] button to return to the Print dialog box.

3 Start printing.

Click the [**OK**] button.

Printing on Non-standard Sized Paper

If you loaded a paper size that is not included in the print sizes of the machine, register the paper size in the [**Basic**] tab of the print settings screen of the printer driver.

The registered size can be selected from the "Print size" menu.

NOTE

To execute printing at the machine, set the paper size and type in the following:

Paper Settings (page 8-13)

1 Display the print settings screen.

1 Click [**Start**] button on the Windows, and then click [**Devices and Printers**].

NOTE

In Windows 8, select [**Settings**] in charms on Desktop, and select [**Control Panel**], and then [**Devices and Printers**].

2 Right-click the printer driver icon of the machine, and click the [**Printer properties**] menu of the printer driver.

3 Click the [**Basic**] button on the [**General**] tab.

2 Register the paper size.

1 Click the [**Basic**] tab.

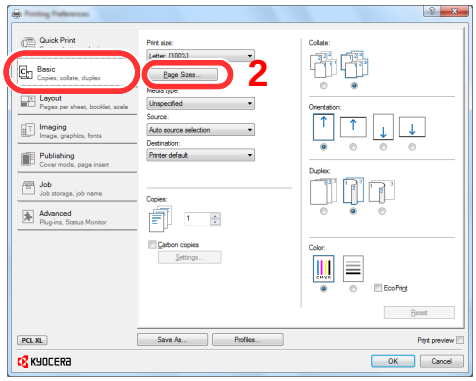

2 Click the [**Page Size...**] button.

3 Click the [**New**] button.

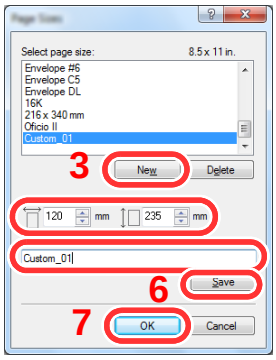

4 Enter the paper size.

5 Enter the name of the paper.

6 Click the [**Save**] button.

7 Click the [**OK**] button.

8 Click the [**OK**] button.

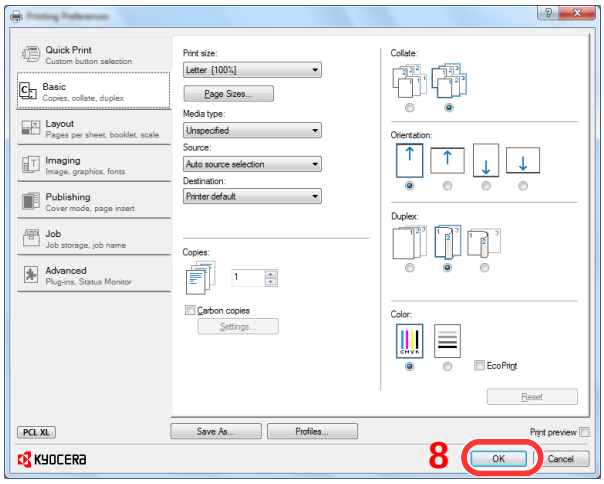

3 Display the screen.

Click [**File**] and select [**Print**] in the application.

4 Select the paper size and type of non-standard size paper.

1 Select the machine from the "Name" menu and click the [**Properties**] button.

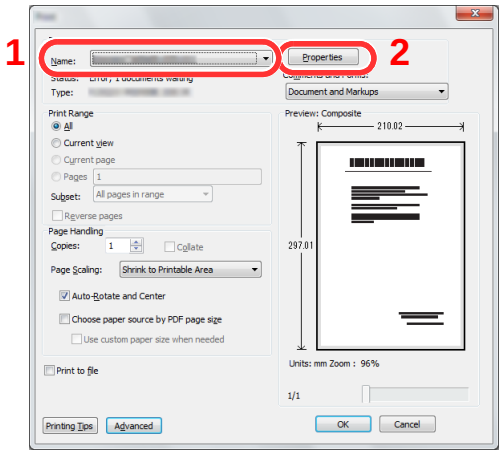

2 Select the [**Basic**] tab.

3 Click "Print size" menu and select the paper size registered in step 2.

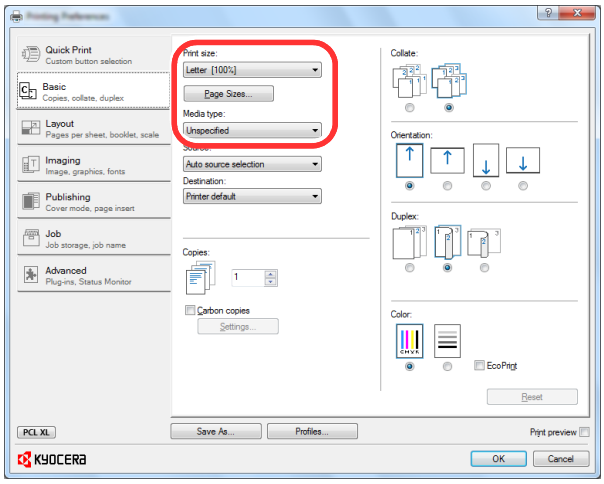

To print on the special paper such as thick paper or transparency, click "Media type" menu and select the media type.

NOTE

If you loaded a postcard or envelope, select [**Cardstock**] or [**Envelope**] in the "Media type" menu.

4 Select the paper source in the "Source" menu.

5 Click [**OK**] button to return to the Print dialog box.

5 Start printing.

Click the [**OK**] button.

Canceling Printing from a Computer

To cancel a print job executed using the printer driver before the printer begins printing, do the following:

NOTE

When canceling printing from this machine, refer to the following:

Canceling Jobs (page 5-19)

1 Double-click the printer icon ( ) displayed on the taskbar at the bottom right of the Windows desktop to display a dialog box for the printer.

2 Click the file for which you wish to cancel printing and select [Cancel] from the "Document" menu.

Printing from the Handheld Device

This machine supports the AirPrint, Google Cloud Print and Mopria. According to the supported OS and application, you can print the job from any handheld device or computer without installing a printer driver.

Printing by AirPrint

AirPrint is a printing function that is included standard in iOS 4.2 and later products, and Mac OS X 10.7 and later products.

To use the AirPrint, make sure that the AirPrint setting is enabled in the Command Center RX.

Command Center RX User Guide



Printing by Google Cloud Print

Google Cloud Print is a printing service provided by Google. This service enables a user with a Google account to print from a machine connected to the Internet.

The machine can be configured in the Command Center RX.

Command Center RX User Guide

NOTE

A Google account is necessary to use Google Cloud Print. Obtain a Google account if you do not have one.

It is also necessary to register the machine with the Google Cloud Print service in advance. The machine can be registered from a PC connected to the same network.

Printing by Mopria

Mopria is a standard on printing function included in Android 4.4 or later products. Mopria Print Service needs to be installed and enabled in advance. For details on how to use, refer to a Web site of Mopria Alliance.

Printing Data Saved in the Printer

You can save the print job into the Job Box of this device and print it as necessary. To use the Job Box, an optional SSD or SD/SDHC memory card must be installed in the device. The RAM disk may also be used as the Job Box.

If you configure settings in the [**Job**] tab of the printer driver and then print, the print job will be saved in the Job Box (memory) and printing can be executed at the machine.

Follow the work flow below when using Job Box.

Specifying the Job Box from a computer and sending the print job. (page 4-10)



Using the operation panel to specify a file within a Box and printing it.

You can print the documents from the following boxes.

- Printing Documents from Private Print Box (page 4-11)
- Printing Document from Stored Job Box (page 4-12)
- Printing Document from Quick Copy Box (page 4-13)
- Printing Document from Proof and Hold Box (page 4-14)

Specifying the Job Box from a Computer and Storing the Job

Use the procedure below to store data in a Job Box.

1. Click [File] and select [Print] in the application. The Print dialog box displays.
2. Select the machine from the "Name" menu.
3. Click the [Properties] button. The Properties dialog box displays.
4. Click the [Job] tab and select the [Job storage (e-MPS)] check box to set the function.

NOTE

- To use Stored Job Box and Quick Copy Box, an optional SSD must be installed in the machine.
- For information on how to use the printer driver software, refer to the following:

Printer Driver User Guide

Printing Documents from Private Print Box

In Private Printing, you can specify that a job is not to be printed until you operate the machine. When sending the job from the application software, specify a 4-digit access code in the printer driver. The job is released for printing by entering the access code on the operation panel, ensuring confidentiality of the print job. The data will be deleted upon completion of the print job or after the power switch is turned off.

Print the documents stored in a Private Print box. The procedure is as follows.

1 Display the screen.

1 [**Home**] key > [**Job Box**]

2 Select [**Private Print/Stored Job**].

3 Select the creator of the document.

2 Print the document.

1 Select the document to print > [**Print**]

2 Enter the access code.

3 Specify the number of copies to print as desired.

4 Select [**OK**].

Printing starts.
Upon completion of printing, the Private Print job is automatically deleted.

Deleting the Documents Stored in the Private Print Box

You can delete the documents stored in the Private Print Box. The procedure is as follows.

1 Display the screen.

1 [**Home**] key > [**Job Box**]

2 Select [**Private Print/Stored Job**].

3 Select the creator of the document.

2 Delete the document.

Select the document to delete > [ ] > Enter the access code

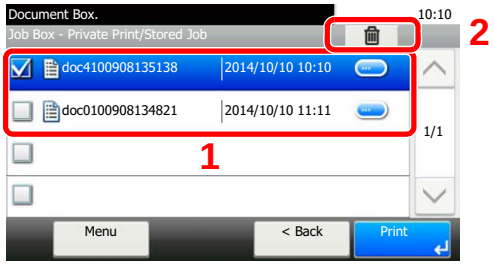

The document is deleted.

Printing Document from Stored Job Box

In Stored Job, the print data sent from the application is saved to the machine. You can set up an access code as necessary. If you set up an access code, enter the access code when printing. Print data will be stored in the Stored Job Box after printing. This will allow printing of the same print data repeatedly.

Print the documents stored in a Stored Job box. The procedure is as follows.

1 Display the screen.

1 [**Home**] key > [**Job Box**]

2 Select [**Private Print/Stored Job**].

3 Select the creator of the document.

2 Print the document.

1 Select the document to print > [**Print**]

2 Specify the number of copies to print as desired.

3 Select [**OK**].

Printing starts.

NOTE

If the document is protected by an access code, the password entry screen will be displayed. Enter the password using the numeric keys.

Deleting the Documents Stored in the Stored Job Box

You can delete the documents stored in the Stored Job Box. The procedure is as follows.

1 Display the screen.

1 [**Home**] key > [**Job Box**]

2 Select [**Private Print/Stored Job**].

3 Select the creator of the document.

2 Delete the document.

1 Select the document to delete > [ ]

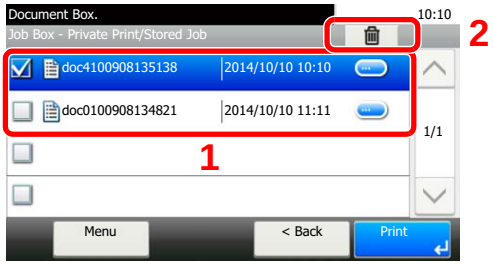

2 Select [**Yes**].

The document is deleted.

NOTE

If the document is protected by an access code, the password entry screen will be displayed. Enter the password using the numeric keys.

Printing Document from Quick Copy Box

Quick Copy feature facilitates additional prints of a document already printed. Activating Quick Copy and printing a document using the printer driver allow the print data to be stored in the Quick Copy Job Box. When additional copies are required, you can reprint the required number of copies from the touch panel. By default, up to 32 documents can be stored. When power is turned off, all stored jobs will be deleted.

NOTE

- When the number of jobs reaches the limit, the oldest job will be overwritten by the new one.
- To maintain free space on the box, you can set the maximum number of stored jobs.

Quick Copy Job Retention (page 8-24)

You can print the documents stored in the Quick Copy box. The procedure is as follows.

1 Display the screen.

1 [**Home**] key > [**Job Box**]

2 Select [**Quick Copy/Proof and Hold**].

3 Select the creator of the document.

2 Print the document.

1 Select the document to print > [**Print**]

2 Specify the number of copies to print as desired.

3 Select [**OK**].

Printing starts.

Deleting the Documents Stored in the Quick Copy Box

You can delete the documents stored in the Quick Copy Box. The procedure is as follows.

1 Display the screen.

1 [**Home**] key > [**Job Box**]

2 Select [**Quick Copy/Proof and Hold**].

3 Select the creator of the document.

2 Delete the document.

1 Select the document to delete > [ ]

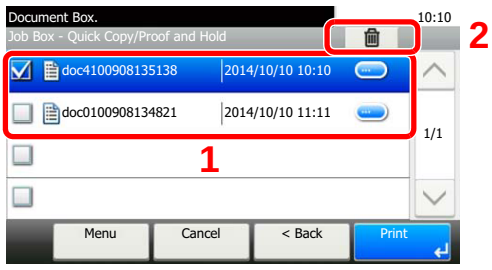

2 Select [**Yes**].

The document is deleted.

Printing Document from Proof and Hold Box

The Proof and Hold feature produces only a single proof print of multiple-print job and holds printing of the remaining copies. Printing a multiple-print job in Proof and Hold using the printer driver allows only a single copy to be printed while maintaining the document data in the Job Box. To continue to print the remaining copies, use the touch panel. You can change the number of copies to print.

You can print the documents stored in the Proof and Hold box. The procedure is as follows.

1 Display the screen.

1 [**Home**] key > [**Job Box**]

2 Select [**Quick Copy/Proof and Hold**].

3 Select the creator of the document.

2 Print the document.

1 Select the document to print > [**Print**]

2 Specify the number of copies to print as desired.

3 Select [**OK**].

Printing starts.

Deleting the Documents Stored in the Proof and Hold Box

You can delete the documents stored in the Proof and Hold Box. The procedure is as follows.

1 Display the screen.

1 [**Home**] key > [**Job Box**]

2 Select [**Quick Copy/Proof and Hold**].

3 Select the creator of the document.

2 Delete the document.

1 Select the document to delete > [ ]

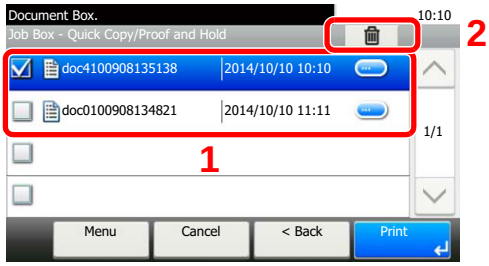

2 Select [**Yes**].

The document is deleted.

Monitoring the Printer Status (Status Monitor)

The Status Monitor monitors the printer status and provides an ongoing reporting function.

NOTE

When you activate Status Monitor, check the status below.

- KX DRIVER is installed.
- Either [**Enhanced WSD**] or [**EnhancedWSD(SSL)**] is enabled.

Network (page 8-29)

Accessing the Status Monitor

The Status Monitor also starts up when printing is started.

Exiting the Status Monitor

Use either of the methods listed below to exit the Status Monitor.

- Exit manually:
  Click the settings icon and select Exit in the menu to exit the Status Monitor.
- Exit automatically:
  The Status Monitor automatically shuts down after 7 minutes if it is not being used.

Quick View State

The status of the printer is displayed using icons. Detailed information is displayed when the Expand button is clicked.

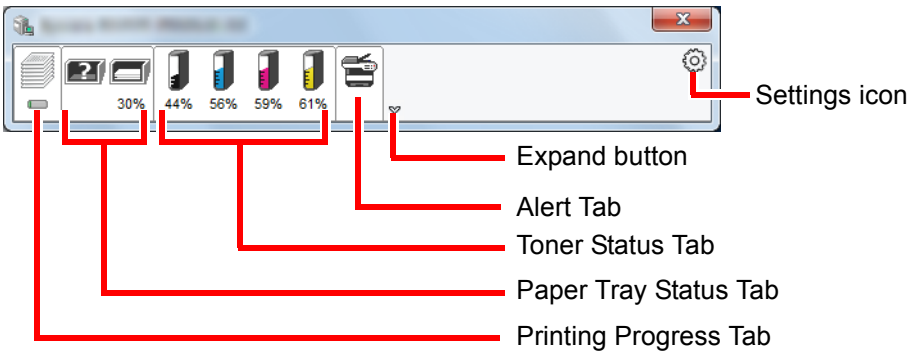

Detailed information is displayed by clicking on each icon tab.

Printing Progress Tab

The status of the print jobs is displayed.

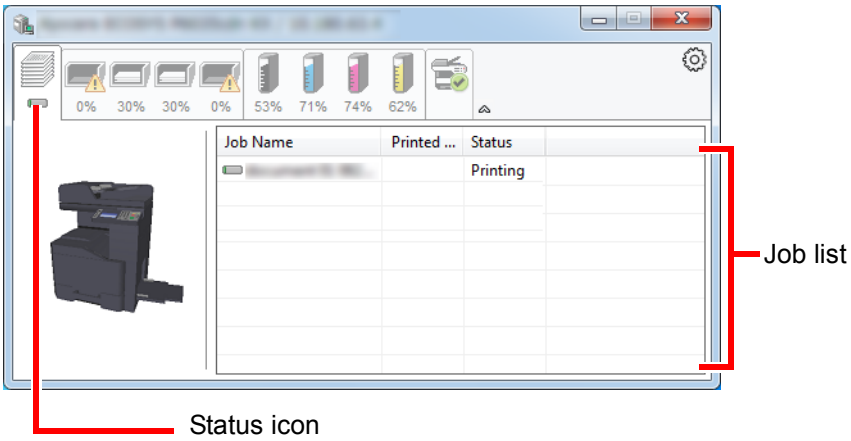

Select a job on the job list and it can be canceled using the menu displayed with a right-click.

Paper Tray Status Tab

Information is displayed about the paper in the printer and about the amount of paper remaining.

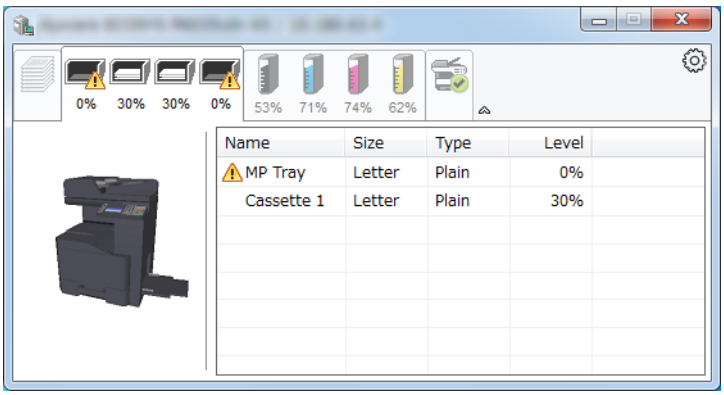

Toner Status Tab

The amount of toner remaining is displayed.

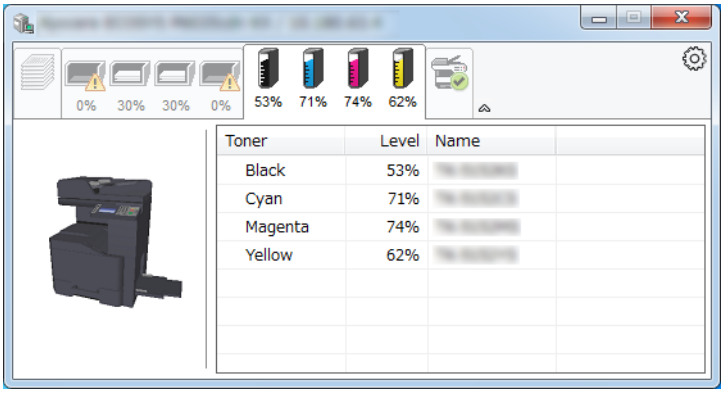

Alert Tab

If an error occurs, a notice is displayed using a 3D image and a message.

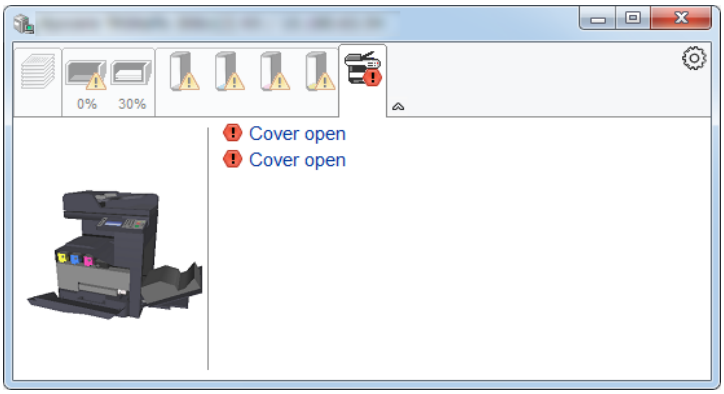

Status Monitor Context Menu

The following menu is displayed when the settings icon is clicked.

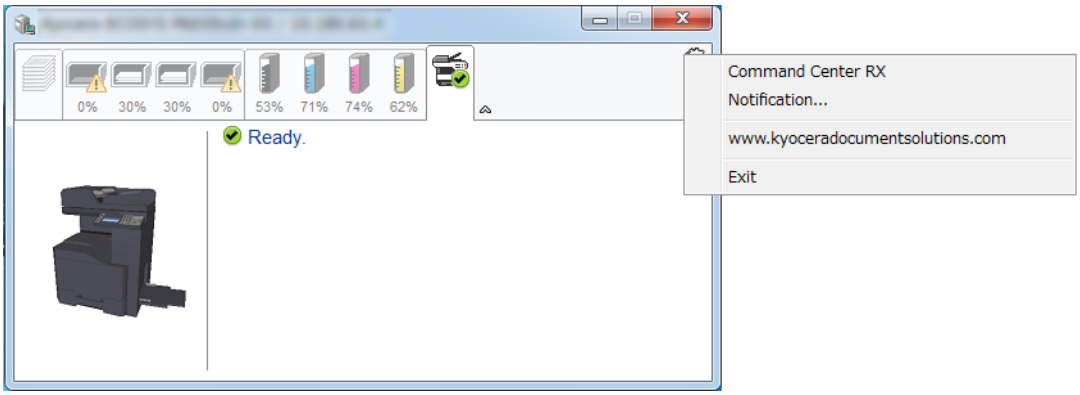

- **Command Center RX**
  If the printer is connected to a TCP/IP network and has its own IP address, use a web browser to access the Command Center RX to modify or confirm the network settings.This menu is not displayed when using USB connection.
  ➔ **Command Center RX User Guide**
- **Notification…**
  This sets the display of the Status Monitor.
  ➔ Status Monitor Notification Settings (page 4-18)
- **www.kyoceradocumentsolutions.com**
  Open our website.
- **Exit**
  Exits the Status Monitor.

Status Monitor Notification Settings

The Status Monitor settings and event list details are displayed.

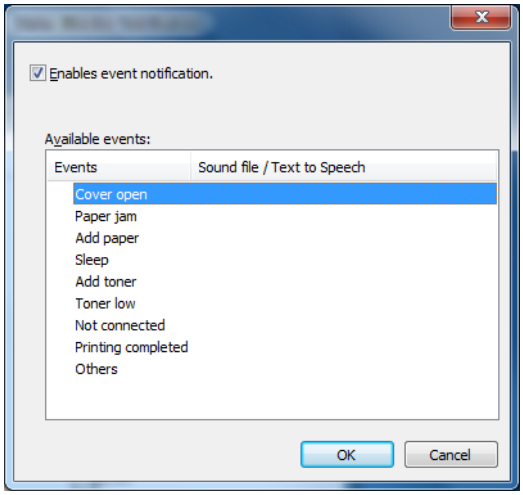

Select whether notification is performed when an error in the event list occurs.

1 Select Enable event notification.

If this setting is set to Off, then the Status Monitor will not start up even when printing is executed.

2 Select an event to use with the text to speech function in Available events.

3 Click Sound file / Text to Speech column.

Click the browse (...) button to notify the event by sound file.

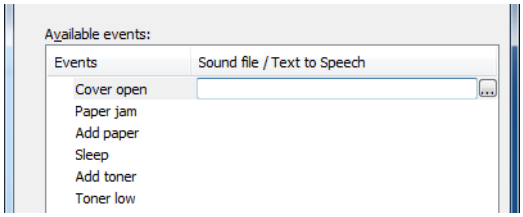

NOTE

The available file format is WAV.

When customizing the message texts to read on the screen aloud, enter the texts in the text box.

5 Operation on the Machine

This chapter explains the following topics:

Loading Originals 5-2
Placing Originals on the Platen 5-2
Loading Originals in the Document Processor 5-3
Loading Paper in the Multi Purpose Tray 5-5
Favorites 5-8
Registering Favorite Using the Wizard Mode 5-9
Registering Favorite Using the Program Mode 5-10
Recalling Favorite using the Wizard Mode 5-11
Recalling Favorite using the Program Mode 5-12
Editing Favorite 5-12
Deleting Favorite 5-12
Application 5-13
Installing Applications 5-13
Activating Applications 5-14
Deactivating Applications 5-15
Uninstalling Applications 5-15
Registering Shortcuts 5-16
Adding Shortcuts 5-16
Editing Shortcuts 5-17
Deleting Shortcuts 5-17
Copying 5-18
Basic Operation 5-18
Interrupt Copy 5-19
Canceling Jobs 5-19
Frequently-Used Sending Method 5-20
Sending Document via E-mail 5-21
Configuring Settings before Sending 5-21
Sending Scanned Document via E-mail 5-21
Sending Document to Desired Shared Folder on a Computer (Scan to PC) 5-22
Configuring Settings before Sending 5-22
Sending Document to Desired Shared Folder on a Computer 5-22
Sending Document to Folder on an FTP Server (Scan to FTP) 5-25
Configuring Settings before Sending 5-25
Sending Document to Folder on an FTP Server 5-25
Using Document Boxes 5-41
WSD Scan 5-29
Installing Driver Software 5-29
WSD scan 5-30
Scanning using TWAIN or WIA 5-27
Configuring Settings before Sending 5-27
Scanning Document Using Application 5-27
Scanning with File Management Utility 5-31
Configuring Settings before Sending 5-31
Recalling a Favorite Configured in FMU 5-31
Sending to Different Types of Destinations (Multi Sending) 5-32
Send to Me (E-mail) 5-33
Configuring Settings before Sending 5-33
Sending a document to the mail address of the logged in user 5-33
Canceling Sending Jobs 5-34
Canceling Scanning 5-34
Handling Destination 5-35
Specifying Destination 5-35
Choosing from the Address Book 5-35
Choosing from the One Touch Key ... 5-38
Checking and Editing Destinations ... 5-38
Confirmation Screen of Destinations 5-39
Recall 5-39
How to use the FAX Function 5-40
Using Document Boxes 5-41
What is Custom Box? 5-41
What is Job Box? 5-41
What is Removable Memory Box? 5-41
Sub Address Box/Polling Box 5-41
Basic Operation for Document Box .. 5-42
Creating a New Custom Box 5-43
Editing Custom Box 5-44
Deleting Custom Box 5-45
Storing Documents 5-45
Printing Documents in Custom Box .. 5-46
Moving Documents in Custom Box ... 5-46
Deleting Documents in Custom Box . 5-47
Operating using Removable USB Memory 5-48
Printing Documents Stored in Removable USB Memory 5-48
Saving Documents to USB Memory (Scan to USB) 5-50
Check the USB Memory Information 5-51
Removing USB Memory 5-51

Loading Originals

Load the originals on the platen or document processor, depending on the original size, type, volume, and function.

- Platen: Place the sheet, book, postcards, and envelopes.
- Document Processor: Place the multiple originals. You can also place the two sided originals.

Placing Originals on the Platen

You may place books or magazines on the platen in addition to ordinary sheet originals.

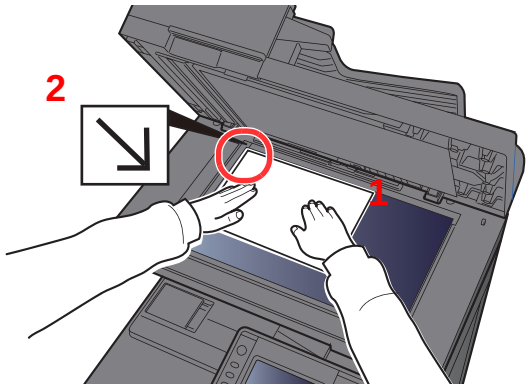

1 Put the scanning side facedown.

2 Align it flush against the original size indicator plates with the back left corner as the reference point.

NOTE

For details on Original Orientation, refer to the following:

Original Orientation (page 6-11)

When you place envelopes or cardstock on the platen

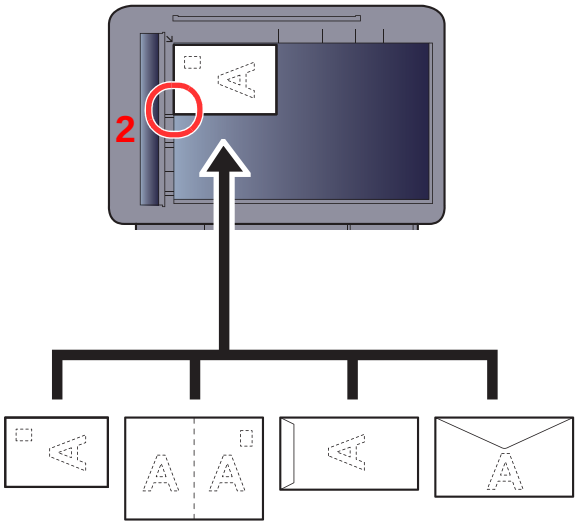

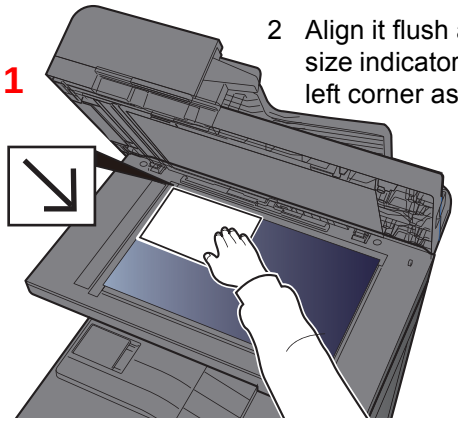

1 Put the scanning side facedown.

2 Align it flush against the original size indicator plates with the back left corner as the reference point.

NOTE

For the procedure for feeding envelopes or cardstock, refer to the following:

Multi Purpose Tray (page 8-9)

CAUTION

Do not leave the document processor open as there is a danger of personal injury.

IMPORTANT

- **Do not push the document processor forcefully when you close it. Excessive pressure may crack the platen glass.**
- **When placing books or magazines on the machine, do so with the document processor in the open position.**

Loading Originals in the Document Processor

The document processor automatically scans each sheet of multiple originals. Both sides of two-sided originals are scanned.

The document processor supports the following types of originals.

Weight	50 to 120 g/m^2 (duplex: 50 to 120 g/m^2)
Sizes	Maximum Folio (Legal) to Minimum A6 (Statement)
No. of sheets	75 sheets or less (50 to 80 g/m^2)

Do not use the document processor for the following types of originals. Otherwise, the originals may be jammed or the document processor may become dirty.

- Originals bound with clips or staples (Remove the clips or staples and straighten curls, wrinkles or creases before loading. Failure to do so may cause the originals to jam.)
- Originals with adhesive tape or glue
- Originals with cut-out sections
- Curled original
- Originals with folds (Straighten the folds before loading. Failure to do so may cause the originals to jam.)
- Carbon paper
- Crumpled paper

IMPORTANT

- **Before loading originals, be sure that there are no originals left on the original eject table. Originals left on the original eject table may cause the new originals to jam.**
- **Do not make an impact on the document processor top cover, such as aligning the originals on the top cover. It may cause an error in the document processor.**

1 Adjust the original width guides.

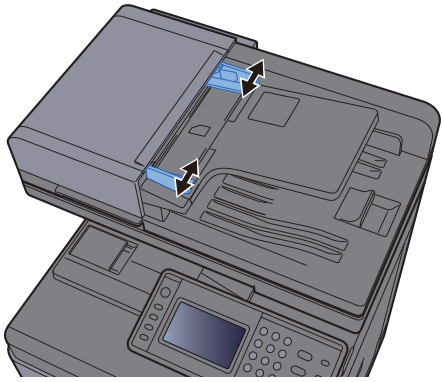

2 Place the originals.

1 Put the side to be scanned (or the first side of two-sided originals) face-up. Slide the leading edge into the document processor as far as it will go.

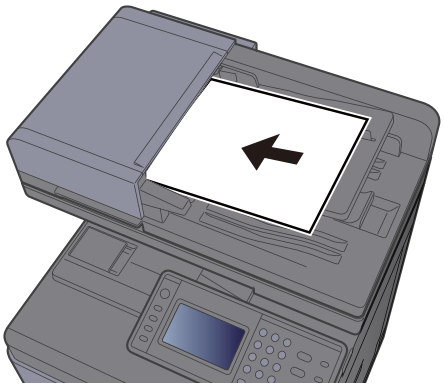

NOTE

For details on Original Orientation, refer to the following:

Original Orientation (page 6-11)

IMPORTANT

Confirm that the original width guides exactly fit the originals. If there is a gap, readjust the original width guides. The gap may cause the originals to jam.

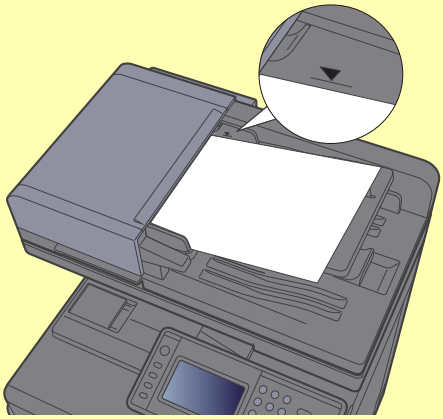

Ensure that loaded originals do not exceed the level indicator. Exceeding the maximum level may cause the originals to jam.

Originals with punched holes or perforated lines should be placed in such a way that the holes or perforations will be scanned last (not first).

2 Open the original stopper to fit the size of the original set (Original size: B5, A4, Letter, or Legal).

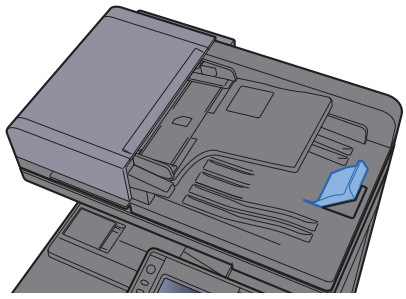

Loading Paper in the Multi Purpose Tray

The multi purpose tray will hold up to 100 sheets of plain paper (80 g/m^2).

For details of the supported paper sizes, refer to the following:

Choosing the Appropriate Paper (page 11-12)

For the paper type setting, refer to the following:

Media Type Setting (page 8-15)

Be sure to use the multi purpose tray when you print on any special paper.

IMPORTANT

- **If you are using a paper weight of 106 g/m^2 or more, set the media type to Thick and set the weight of the paper you are using.**
- **Remove each transparency from the inner tray as it is printed. Leaving transparencies in the inner tray may cause a paper jam.**

The capacity of the multi purpose tray is as follows.

- Plain paper (80 g/m^2), recycled paper or color paper: 100 sheets
- Thick paper (209 g/m^2): 10 sheets
- Thick paper (157 g/m^2): 10 sheets
- Thick paper (104.7 g/m^2): 25 sheets
- Hagaki (Cardstock): 20 sheets
- Envelope DL, Envelope C5, Envelope #10, Envelope #9, Envelope #6 3/4, Envelope Monarch, Youkei 4, Youkei 2: 5 sheets
- OHP film: 1 sheet
- Coated: 30 sheets

NOTE

- When you load custom size paper, enter the paper size by referring to the following:

Paper Settings (page 8-13)

- When you use special paper such as transparencies or thick paper, select the media type by referring to the following:

Multi Purpose Tray (page 8-9)

1 Open the multi purpose tray.

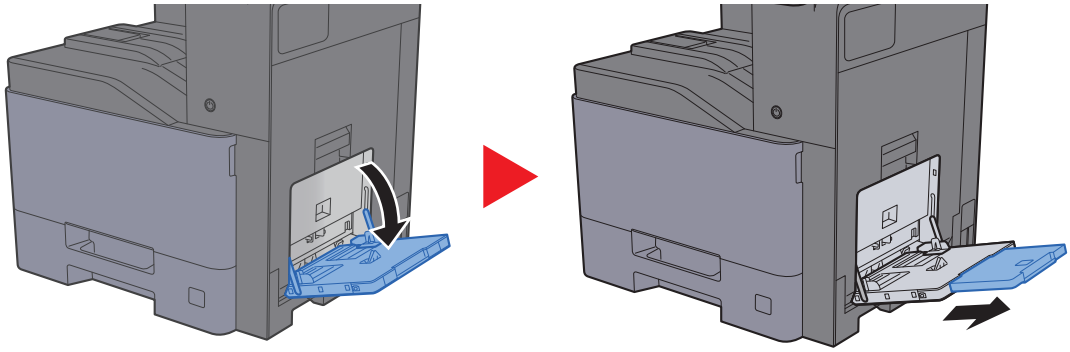

2 Adjust the multi purpose tray size.

Paper sizes are marked on the multi purpose tray.

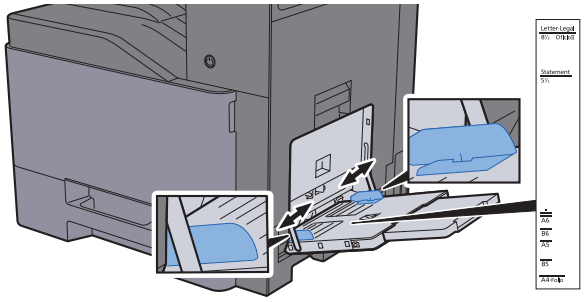

3 Load paper.

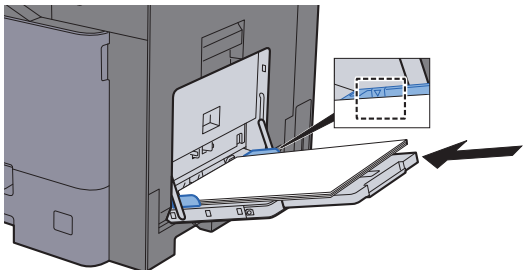

Insert the paper along the paper width guides into the tray until it stops.

After removing new paper from its packaging, fan the paper before loading it in the multi purpose tray.

Precaution for Loading Paper (page 3-2)

IMPORTANT

- **When loading the paper, keep the print side facing down.**
- **Curled paper must be uncurled before use.**
- **When loading paper into the multi purpose tray, check that there is no paper left over in the tray from a previous job before loading the paper. If there is just a small amount of paper left over in the multi purpose tray and you want to add more, first remove the left-over paper from the tray and include it with the new paper before loading the paper back into the tray.**
- **If there is a gap between the paper and the paper width guides, readjust the guides to fit the paper in order to prevent skewed feeding and paper jams.**
- **Ensure that the loaded paper does not exceed the load limits.**

4 Specify the type of paper loaded in the multi purpose tray using the operation panel.

Multi Purpose Tray (page 8-9)

When you load envelopes or cardstock in the multi purpose tray

Load the paper with the print side facing down. For the procedure for printing, refer to the following:

Printer Driver User Guide

Example: When printing the address.

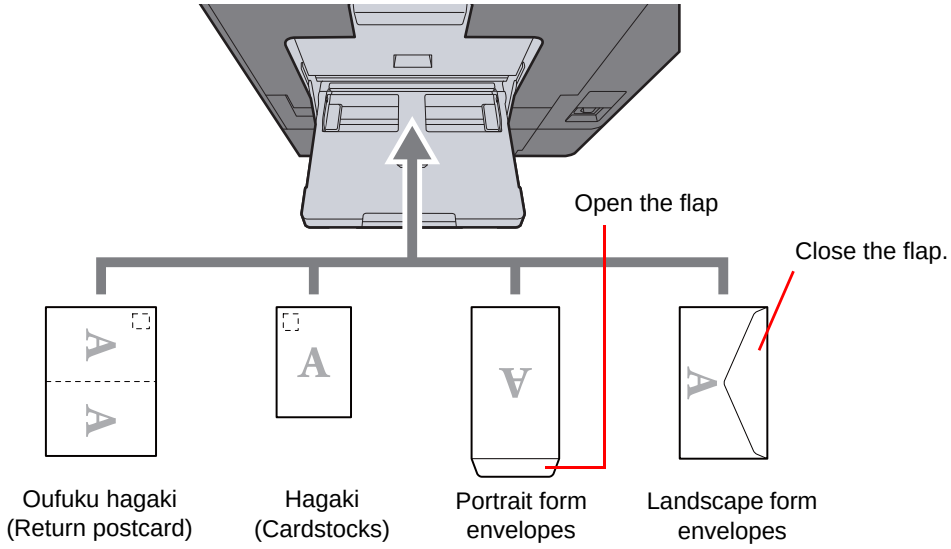

IMPORTANT

- **Use unfolded Oufuku hagaki (Return postcard).**
- **How to load envelopes (orientation and facing) will differ depending on the type of envelope. Be sure to load it in correctly, otherwise printing may be done in the wrong direction or on the wrong face.**

NOTE

- When you load envelopes in the multi purpose tray, select the envelope type by referring to the following:

Cassette/MP Tray Settings (page 8-8)

- Lift up the stopper when you load cardstock in the multi purpose tray.

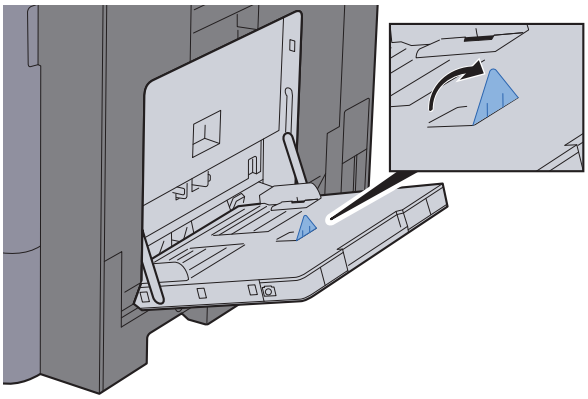

Favorites

Frequently used functions can be registered as favorites so that they can be called up easily.

The following functions are pre-registered on this machine. You can delete these functions as well as register new functions.

Favorites Name	Description	Default Registration
ID Card Copy	Use this when you want to copy a driver's license or an insurance card. When you scan the front and back of the card, both sides will be combined and copied onto a single sheet.	• Copying Functions • Program mode • Combine: [**2 in 1**] Color Selection: [**Black & White**] Continuous Scan: [**On**] Original Size: [**A5/Statement**] Paper Selection: Cassette 1 Zoom: [**Auto Zoom**]
Paper Saving Copy	Use this when you want to reduce paper use. Page combining and two-sided copying can be set by following the screen.	• Copying Functions • Wizard mode • Combine: [**2 in 1**] 2-sided/Original: [**1-sided**] Duplex: [**1-sided>>2-sided**] Paper Selection: Cassette 1 Copies: 1
Scan to PC (Address Entry)	Use this when you want to send the image to either a shared folder on a PC or an FTP server folder. The settings such as the destination and color selection can be set by following the screen.	• Sending Functions • Wizard mode • Destination: New PC Folder Color Selection: [**Full Color**] File Name Entry: Default File Format: [**PDF**] Continuous Scan: [**Off**] Scan Resolution: [**300×300 dpi**]
Scan to PC (Address Book)	Use this when you want to send the image to either a shared folder on a PC registered in the Address Book or to an FTP server folder. The settings such as the destination and color selection can be set by following the screen.	• Sending Functions • Wizard mode • Destination: Address Book Color Selection: [**Full Color**] File Name Entry: Default File Format: [**PDF**] Continuous Scan: [**Off**] Scan Resolution: [**300×300 dpi**]
Scan to E-mail (Address Entry)	Use this when you want to send the image to an E-mail address. The settings such as the destination and color selection can be set by following the screen.	• Sending Functions • Wizard mode • Destination: New E-mail Address Color Selection: [**Full Color**] File Name Entry: Default File Format: [**PDF**] Continuous Scan: [**Off**] Scan Resolution: [**300×300 dpi**] E-mail subject: Default E-mail body: Default

Favorites Name	Description	Default Registration
Scan to E-mail (Address Book)	Use this when you want to send the image to an E-mail address registered in the Address Book. The settings such as the destination and color selection can be set by following the screen.	• Sending Functions • Wizard mode • Destination: Address Book Color Selection: [**Full Color**] File Name Entry: Default File Format: [**PDF**] Continuous Scan: [**Off**] Scan Resolution: [**300×300 dpi**] E-mail subject: Default E-mail body: Default

NOTE
Up to 20 settings can be registered as favorites.

When registering a favorite, you can choose from two methods for calling it up:

- Wizard mode: Registered settings are called up in order and configured as you check or change each one.
- Program mode: Settings are called up immediately when you select the key to which they are registered.

Registering Favorite Using the Wizard Mode

Sending is explained as an example below.

1 Display the screen.

[**Home**] key > [**Favorites**]

2 Register the favorite.

1 [**Menu**] > [**Add**]

2 Select the job type.

3 Select [**Wizard**].

4 Select the recall function > [**Next**]

NOTE
When the job type is "Copy", the Destination Recall Method screen will not be displayed.

5 Enter the new favorite name > [**Next**]

Character Entry Method (page 11-8)

6 Check the settings and change or add information as needed.

Item	Description
Name	Enter the name displayed on the favorite screen (up to 32 characters).
Job Type	The type of the selected job is displayed.
Number[*1]	Enter the favorite number. If you enter 00, the smallest number available will be automatically assigned.
Owner[*2]	Displays the owner of the favorite.
Permission[*2]	Configures permission settings for favorites to determine how they are shared with other users.
Destination[*3]	Selects the Destination Recall Method.
Functions	Selects the functions to be displayed in the wizard.
Function Type	Selects the method for recalling favorites.

*1 If user login administration is enabled, you can only change the settings by logging in with administrator privileges.
*2 Displayed when user login administration is enabled.
*3 Displayed when the job type is [**Send**] or [**FAX**].

7 Select [**Save**].

The favorite is registered.

8 "Do you want to add a new function to the home screen?" screen appears.To display a registered favorite on the Home screen, select [**Yes**] and specify the position in which you want to display the icon of registered favorite, and select [**Save**].

Registering Favorite Using the Program Mode

When registering favorites in program mode, configure the copy function, send function, fax function (Only on products with the fax function installed.), destination, or other setting to register.

1 Display the screen.

1 [**Home**] key > [**Send**]

2 Select the sending functions and destinations that you want to register in the program.

3 Select [**Favorites**].

2 Register the favorite.

1 [**Menu**] > [**Add**]

2 Select the job type.

3 Select [**Program**].

4 Enter the new favorite name > [**Next**]

Character Entry Method (page 11-8)

5 Check the settings and change or add information as needed.

Item	Description
Name	Enter the name displayed on the favorite screen (up to 32 characters).
Job Type	The type of the selected job is displayed.
Number[*1]	Enter the favorite number. If you enter 00, the smallest number available will be automatically assigned.
Owner[*2]	Displays the owner of the favorite.
Permission[*2]	Configures permission settings for favorites to determine how they are shared with other users.
Function Type	Selects the method for recalling favorites.

*1 If user login administration is enabled, you can only change the settings by logging in with administrator privileges.
*2 Displayed when user login administration is enabled.

6 Select [**Save**].

The favorite is registered.

7 "Do you want to add a new function to the home screen?" screen appears. To display a registered favorite on the Home screen, select [**Yes**] and specify the position in which you want to display the icon of registered favorite, and select [**Save**].

Recalling Favorite using the Wizard Mode

Use the procedure below to recall a registered favorite using the Wizard Mode.

1 Display the screen.

1 Select [**Favorites**] on the Home screen, or the key of the registered favorite.

Selecting the key of the registered favorite will recall the favorite. If you selected [**Favorites**], proceed to the next step.

2 Select the key for the favorite you want to recall.

2 Execute the favorite.

1 The registered screens are displayed in order. Make the desired settings and select [**Next**].

When all the settings are complete, the confirmation screen is displayed.

NOTE
To edit the settings, select [**<Back**] and make changes as desired.

2 Place the originals > [**Start**] key

Recalling Favorite using the Program Mode

Use the procedure below to recall a registered favorite using the Program Mode.

1 Display the screen.

1 Select [**Favorites**] on the Home screen, or the key of the registered favorite.

Selecting the key of the registered favorite will recall the favorite. If you selected [**Favorites**], proceed to the next step.

2 Select the key for the favorite you want to recall.

2 Execute the favorite.

Place the originals > [**Start**] key

Editing Favorite

You can change favorite number and favorite name.

Use the procedure below to edit a favorite.

1 Display the screen.

[**Home**] key > [**Favorites**]

2 Edit the favorite.

1 [**Menu**] > [**Edit**]

2 Select the favorite you wish to edit.

3 Change the favorite number, favorite name, permission.

When registering a favorite, you can choose from two methods for calling it up: (page 5-9)

4 [**Save**] > [**Yes**]

Deleting Favorite

You can also delete a favorite.

Use the procedure below to delete a favorite.

1 Display the screen.

[**Home**] key > [**Favorites**]

2 Delete the favorite.

To delete

1 [**Menu**] > [**Delete**]

2 Select the favorite you wish to delete.

3 Select [**Yes**].

Application

The functionality of the machine can be expanded by installing applications.

Applications that help you perform your daily more efficiently such as a scan feature and an authentication feature are available.

For details, consult your sales representative or dealer.

Installing Applications

To use applications, first install the application in the machine and then activate the application.

NOTE

A maximum of 16 applications and 5 licenses can be installed on the machine. To add different applications, uninstall an application that has been installed.

Uninstalling Applications (page 5-15)

The procedure is as follows.

1 Display the screen.

[**System Menu/Counter**] key > [**Application**] > [**Application**]

NOTE

If the user authentication screen appears, enter your login user name and login password and select [**Login**]. For this, you need to login with administrator privileges. The factory default login user name and login password are set as shown below.

Login User Name: **3000**

Login Password: **3000**

2 Install the application.

1 Select [➕].

2 Insert the removable memory containing the application to be installed into the USB Memory Slot.

NOTE

When the message "Removable Memory was recognized. Displaying files. Are you sure?" is displayed, select [**No**].

3 Select the application to be installed > [**Install**]

You can view detailed information on the selected application by selecting [▬].

4 Select [**Yes**].

Installation of the application begins. Depending on the application being installed, the installation may take some time.

Once the installation ends, the original screen reappears.

NOTE

- To install another application, repeat steps 2-3 and 2-4.
- To remove the removable memory, select [**Remove Memory**] and wait until the message "Removable Memory can be safely removed." appears. Then remove the removable memory.

Activating Applications

The procedure is as follows.

1 Display the screen.

[**System Menu/Counter**] key > [**Application**] > [**Application**]

NOTE

If the user authentication screen appears, enter your login user name and login password and select [**Login**]. For this, you need to login with administrator privileges. The factory default login user name and login password are set as shown below.

Login User Name: **3000**

Login Password: **3000**

2 Activate the application.

1 Select the desired application > [**Menu**] > [**Activate**]

You can view detailed information on the selected application by selecting [ ].

2 [**Official**] > Enter the license key > [**OK**]

Some applications do not require you to enter a license key. If the license key entry screen does not appear, go to step 2-3. To use the application as a trial, select [**Trial**] without entering the license key.

3 Select [**Yes**].

IMPORTANT

If you change the date/time while using the trial version of an application, you will no longer be able to use the application.

3 Select the application icon in the Home screen.

Select the application icon.

The application will start up.

Deactivating Applications

The procedure is as follows.

1 Display the screen.

[**System Menu/Counter**] key > [**Application**] > [**Application**]

> **NOTE**
>
> If the user authentication screen appears, enter your login user name and login password and select [**Login**]. For this, you need to login with administrator privileges. The factory default login user name and login password are set as shown below.
>
> **Login User Name:** **3000**
>
> **Login Password:** **3000**

2 Deactivate the application.

1 Select the application you want to deactivate > [**Menu**] > [**Deactivate**]

You can view detailed information on the selected application by selecting [ ].

2 Select [**Yes**].

Uninstalling Applications

The procedure is as follows.

1 Display the screen.

[**System Menu/Counter**] key > [**Application**] > [**Application**]

> **NOTE**
>
> If the user authentication screen appears, enter your login user name and login password and select [**Login**]. For this, you need to login with administrator privileges. The factory default login user name and login password are set as shown below.
>
> **Login User Name:** **3000**
>
> **Login Password:** **3000**

2 Uninstall the application.

1 Select the application you want to uninstall > [ ]

You can view detailed information on the selected application by selecting [ ].

2 Select [**Yes**].

Registering Shortcuts

You can register shortcuts for easy access to the frequently used functions. The settings for the selected function can also be registered. A function name linked to a registered shortcut can be changed as necessary. You can register up to 2 shortcuts for copying functions, sending functions, fax functions, and functions set for document box.

Adding Shortcuts

Shortcut registration is performed in the "Functions" screen of each function. Use the procedure below to register a shortcut.

1 Display the screen.

In the Copy, Send, Document Box, or FAX screen, select as follows.

[**Functions**] > [**Add/Edit Shortcut**]

2 Register the shortcuts.

1 Select [**Add**].

2 Select the key to which you wish to register the shortcut.

The following types of shortcuts are available:

Private Shortcut 1, 2	Private shortcuts are only available for use by the logged in user. They can only be set while using user login administration.
Shared Shortcut 1, 2	Shared shortcuts can be used by all machine users. When using user login administration, shared shortcuts can only be set by users who have logged in as administrators.

NOTE

If you select a shortcut number already registered, the currently registered shortcut can be replaced with a new one.

3 Select the function screen to display with the shortcut.

4 Enter the shortcut name > [**Next**]

Up to 24 characters can be entered.

Character Entry Method (page 11-8)

5 Select [**Save**].

The shortcut is registered.

Editing Shortcuts

Follow the steps shown below to change a shortcut number/name.

1 In the "Functions" screen of each function, select [Add/Edit Shortcut] in the bottom of the screen.

2 Edit the shortcut.

1. Select [**Edit**].
2. Select the shortcut type and number you wish to edit.
3. Select [**Number**] or [**Name**].
4. Change the settings > [**OK**]
5. [**Save**] > [**Yes**]

Deleting Shortcuts

Follow the steps shown below to delete a shortcut.

1 In the "Functions" screen of each function, select [Add/Edit Shortcut] in the bottom of the screen.

2 Delete the shortcut.

1. Select [**Delete**].
2. Select the shortcut you wish to delete.
3. Select [**Yes**].

Copying

The procedures here represent the basic copy operation and how to cancel the copy.

Basic Operation

Follow the steps as below for basic copying.

1 [Home] key > [Copy]

2 Place the originals.

Place the originals.

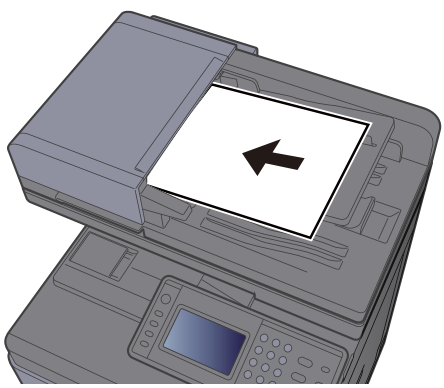

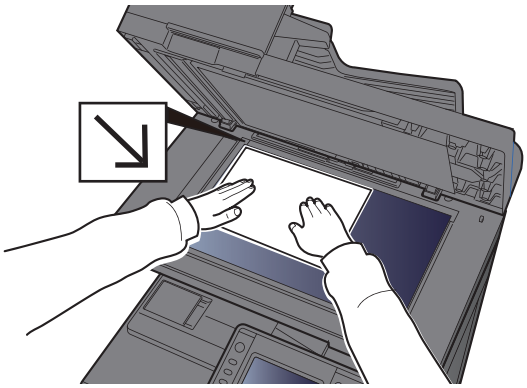

Loading Originals (page 5-2)

3 Select the functions.

To configure the settings for functions, select the function key. By selecting [**Functions**], other selectable functions will be shown as a list.

How to Select Functions (page 6-2)

4 Use the numeric keys to enter the copy quantity.

Specify the desired number up to 999.

5 Press the [Start] key.

Copying begins.

NOTE

This function allows you to reserve the next job during printing. Using this function, the original will be scanned while the machine is printing. When the current print job ends, the reserved copy job is printed. If "Reserve Next Priority" is set to [**Off**], [**Reserve Next**] will appear. Select [**Reserve Next**] and configure the necessary settings for the copy job.

Reserve Next Priority (page 8-22)

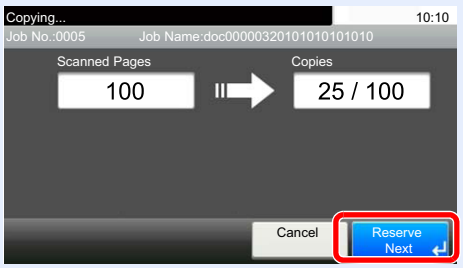

Interrupt Copy

This function allows you to pause the current jobs in progress when you need to make copies immediately.

When the interruption copy ends, the machine resumes the paused print jobs.

NOTE

- If the machine is left unused for 60 seconds in interrupt copy mode, interrupt copying is automatically cancelled and printing resumes.
  You can change the delay until interrupt copying is canceled. Change the delay as required.

Interrupt Clear Timer (page 8-41)

- The interrupt copy function may be unavailable depending on the status of document finisher usage. In this case, try the priority override.

Priority Override (page 6-30)

1 Configure the settings.

1 Select the [**Interrupt**] key.

The current print job is temporarily interrupted.

2 Place the originals onto the machine for interrupt copy, and configure the copy settings.

2 Press the [Start] key.

Interrupt copying begins.

3 When interrupt copying ends, select the [Interrupt] key.

The machine resumes the paused print jobs.

Canceling Jobs

You can also cancel jobs by selecting the [**Stop**] key.

1 Select the [Stop] key with the copy screen displayed.

2 Cancel a job.

When there is a job is being scanned

The copy job is canceled.

When there is a job printing or on standby

Canceling job screen appears. The current print job is temporarily interrupted.

Select the job you wish to cancel > [**Delete**] > [**Yes**]

NOTE

If "Reserve Next Priority" is set to [**Off**], the Copying screen appears in the touch panel. In such case, selecting the [**Stop**] key or [**Cancel**] will cancel the printing job in progress.

Reserve Next Priority (page 8-22)

Frequently-Used Sending Method

This machine can send a scanned image as an attachment of an E-mail message or to a PC linked to the network. In order to do this, it is necessary to register the sender and destination (recipient) address on the network.

A network environment which enables the machine to connect to a mail server is required in order to send E-mail. It is recommended that a Local Area Network (LAN) be used to assist with transmission speed and security issues.

Follow the steps below for basic sending. The following four options are available.

- Send as E-mail (E-mail Addr Entry): Sends a scanned original image as an E-mail attachment.

Sending Document via E-mail (page 5-21)

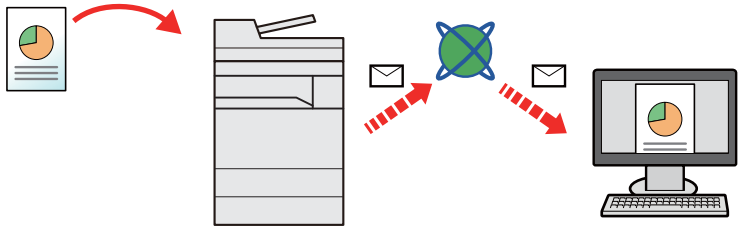

- Send to Folder (SMB): Stores a scanned original image in a shared folder of any PC.

Sending Document to Desired Shared Folder on a Computer (Scan to PC) (page 5-22)

- Send to Folder (FTP): Stores a scanned original image in a folder of an FTP server.

Sending Document to Folder on an FTP Server (Scan to FTP) (page 5-25)

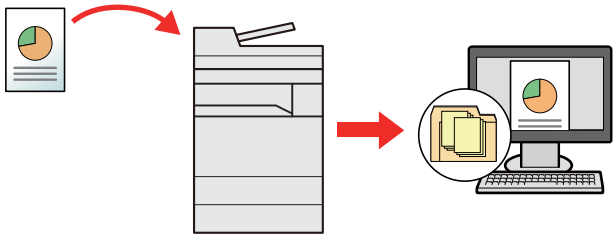

- Image Data Scanning with TWAIN / WIA: Scan the document using a TWAIN or WIA compatible application program.

Scanning using TWAIN or WIA (page 5-27)

NOTE

- Different sending options can be specified in combination.

Sending to Different Types of Destinations (Multi Sending) (page 5-32)

- The fax function can be used on products equipped with fax capability.

FAX System 11 Operation Guide

Sending Document via E-mail

Follow the steps as below for sending a document via e-mail.

Configuring Settings before Sending

Before sending an E-mail, configure the SMTP and E-mail settings using the Command Center RX.

E-mail Settings (page 2-52)

Sending Scanned Document via E-mail

Follow the steps as below for sending a document via e-mail.

1 [Home] key > [Send]

2 Place the originals.

Place the originals.

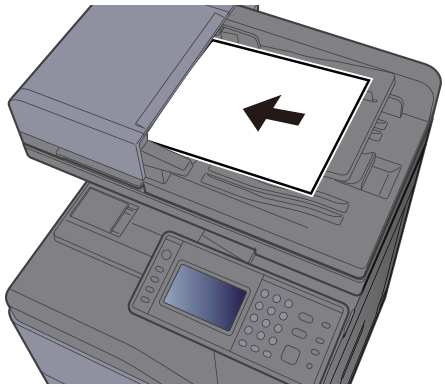

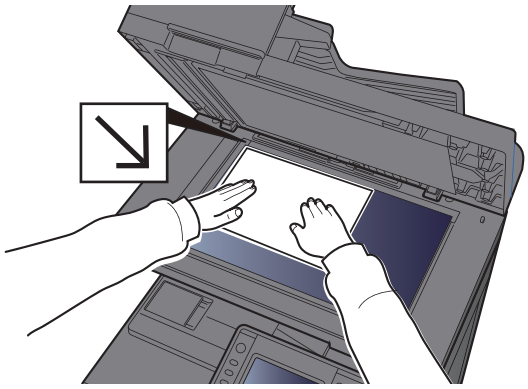

Loading Originals (page 5-2)

3 In the basic screen for sending, select [E-mail].

4 Enter destination E-mail address > [OK]

Up to 128 characters can be entered.

Character Entry Method (page 11-8)

To enter multiple destinations, select [**Next Destination**] and enter the next destination. Up to 100 E-mail addresses can be specified.

You can register the entered E-mail address in the Address Book by selecting [**Menu**] > [**Add to Address Book**]. You can also replace the information for a previously registered destination.

Destinations can be changed later.

Confirmation Screen of Destinations (page 5-39)

5 Select the functions.

Select [**Functions**] to display other functions.

Send (page 6-4)

6 Press the [Start] key.

Sending starts.

Sending Document to Desired Shared Folder on a Computer (Scan to PC)

You can store the scanned document into the desired shared folder on a computer.

Configuring Settings before Sending

Before sending an document, configure the following settings.

- Make a note of the computer name and full computer name
  Making a note of the computer name and full computer name (page 3-12)
- Make a note of the user name and domain name
  Making a note of the user name and domain name (page 3-13)
- Create a shared folder and make a note of a shared folder
  Creating a Shared Folder, Making a Note of a Shared Folder (page 3-14)
- Configure the Windows firewall
  Configuring Windows Firewall (page 3-18)

Sending Document to Desired Shared Folder on a Computer

Follow the steps as below for sending a document to the desired shared folder on a computer.

1 [Home] key > [Send]

2 Place the originals.

Place the originals.

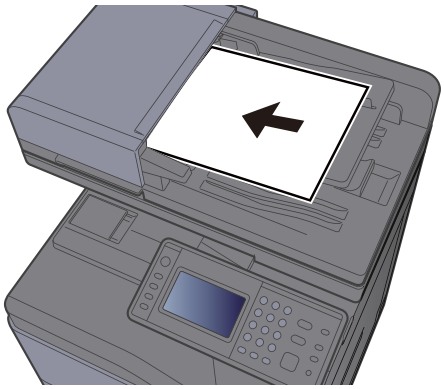

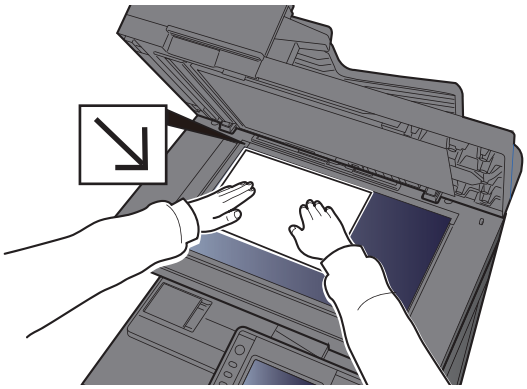

Loading Originals (page 5-2)

3 In the basic screen for sending, select [Folder].

4 Select [SMB] from the folder type.

5 Select the folder specification method.

To search for a folder on a PC on the network, select [**Search Folder from Network**] or [**Search Folder by Host Name**].

If you selected [**Search Folder from Network**], you can search all PCs on the network for a destination.

If you selected [**Search Folder by Host Name**], you can enter the "Domain/Workgroup", and "Host Name" to search PCs on the network for the destination.

Up to 500 addresses can be displayed. Select the host name (PC name) that you want to specify in the screen that appears, and select [**Next**]. The login user name and login password entry screen appears.

After you enter the login user name and login password name of the destination PC, the shared folders appear. Select the folder that you want to specify and select [**Next**]. The address of the selected shared folder is set.

Select the folder from the Search Results list.

6 Enter the destination information.

Enter the next information. Once you have entered one item, select [**Next**] to advance to the next item.

Character Entry Method (page 11-8)

The table below lists the items to be set.

Item	Detail	Max. characters
Host Name	Computer name	Up to 64 characters
Path	Share name For example: scannerdata If saving in a folder in the shared folder: share name\folder name in shared folder	Up to 128 characters
Port	Port number (Normally 445.)	1 - 65535
Login User Name	If the computer name and domain name are the same: User Name For example: james.smith If the computer name and domain name are different: Domain name\User name For example: abcdnet\james.smith	Up to 64 characters
Login Password	Windows logon password **(Case sensitive.)**	Up to 64 characters

7 Check the status.

1 Check the information.

Change the delay as required.

2 Check the connection.

[**Menu**] > [**Connection Test**]

"Connected." appears when connection to the destination is correctly established. If "Cannot connect." appears, review the entry.

To enter multiple destinations, select [**Next Destination**] and enter the next destination.

You can register the entered information in the Address Book by selecting [**Add to Address Book**].

8 Select [OK].

Destinations can be changed later.

Confirmation Screen of Destinations (page 5-39)

9 Select the functions.

Select [**Functions**] to display other functions.

Send (page 6-4)

10 Press the [Start] key.

Sending starts.

Sending Document to Folder on an FTP Server (Scan to FTP)

You can store the scanned document into the desired shared folder on a computer.

Configuring Settings before Sending

Before sending an document, configure the FTP Client (Transmission).

Protocol Detail (page 8-31)

Sending Document to Folder on an FTP Server

Follow the steps as below for sending a document to the folder on an FTP server.

1 [Home] key > [Send]

2 Place the originals.

Place the originals.

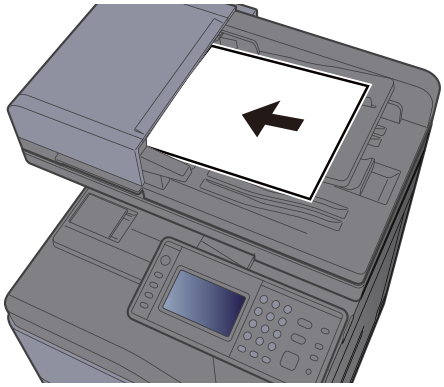

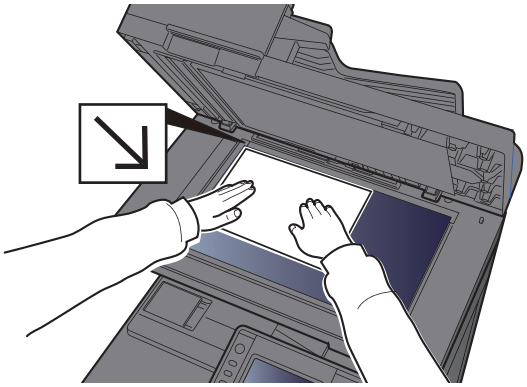

Loading Originals (page 5-2)

3 In the basic screen for sending, select [Folder].

4 Select [FTP] from the folder type.

5 Enter the destination information.

Enter the next information. Once you have entered one item, select [**Next**] to advance to the next item.

Character Entry Method (page 11-8)

The table below lists the items to be set.

Item	Data to be entered	Max. characters
Host Name	Host name or IP address of FTP server	Up to 64 characters
Path[*1]	Path to the receiving folder For example: User\ScanData Otherwise the data will be saved in the home directory.	Up to 128 characters
Port	Port number (Normally 21.)	1 - 65535
Login User Name	FTP server login user name	Up to 64 characters
Login Password	FTP server login password **(Case sensitive.)**	Up to 64 characters

*1 When the FTP server is based on Linux/UNIX, the path including the sub-folder is combined by the slash "/" not using the back-slash.

6 Check the status.

1 Check the information.

Change the delay as required.

2 Check the connection.

[**Menu**] > [**Connection Test**]

"Connected." appears when connection to the destination is correctly established. If "Cannot connect." appears, review the entry.

To enter multiple destinations, select [**Next Destination**] and enter the next destination.

You can register the entered information in the Address Book by selecting [**Add to Address Book**].

7 Select [OK].

Destinations can be changed later.

Confirmation Screen of Destinations (page 5-39)

8 Select the functions.

Select [**Functions**] to display other functions.

Send (page 6-4)

9 Press the [Start] key.

Sending starts.

Scanning using TWAIN or WIA

This section explains how to scan an original using TWAIN or WIA.

Configuring Settings before Sending

Before sending an document, confirm that TWAIN/WIA driver is installed on a computer and the settings are configured.

Setting TWAIN Driver (page 2-40)

Setting WIA Driver (page 2-42)

Scanning Document Using Application

This subsection explains how to scan an original using TWAIN. The WIA driver is used in the same way.

1 Display the screen.

1 Activate the TWAIN compatible application software.

2 Select the machine using the application and display the dialog box.

NOTE
For selecting the machine, see the Operation Guide or Help for each application software.

2 Configure the scan settings.

Select scanning settings in the dialog box that opens.

NOTE
For the settings, refer to Help in the dialog box.

3 Place the originals.

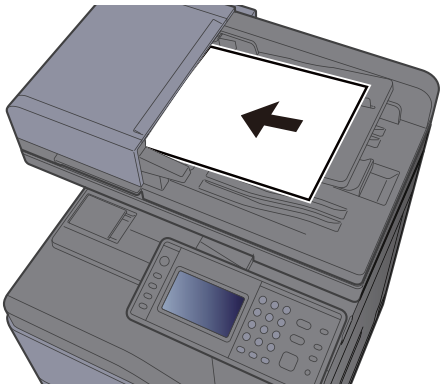

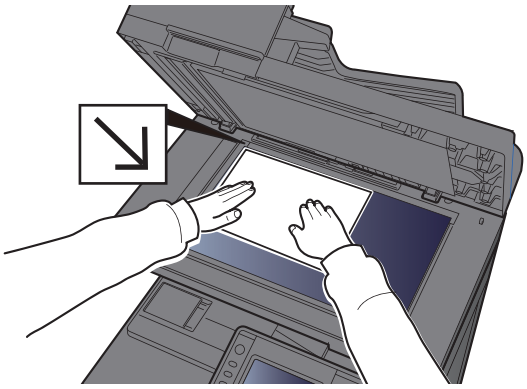

Loading Originals (page 5-2)

4 Scan the originals.

Click the [**Scan**] button. The document data is scanned.

Useful Sending Method

You can specify the follwing useful scanning (sending) methods.

WSD Scan: Saves images of originals scanned on this machine as files on a WSD-compatible computer.

WSD Scan (page 5-29)

Scanning with File Management Utility:Scans a document using the settings of File Management Utility and saves it to a specified network folder or PC.

Scanning with File Management Utility (page 5-31)

Sending to different types of destinations (Multi sending): Sends to different types of destination (E-mail addresses, folders, etc.) in a single operation.

Sending to Different Types of Destinations (Multi Sending) (page 5-32)

Send to Me (E-mail): Sends to the E-mail address of the logged in user when user login is enabled.

Send to Me (E-mail) (page 5-33)

WSD Scan

WSD Scan saves images of originals scanned on this machine as files on a WSD-compatible computer.

NOTE

- To use WSD Scan, confirm that the computer used for WSD scanning and the machine is network-connected, and "WSD Scan" is set to [**On**] in the network settings.

WSD Scan (page 8-32)

- For information on operating the computer, refer to the computer's help or the operation guide of your software.

Installing Driver Software

For Windows 7

1 Display [Network] in the Start menu.

Click [**Start**] button on the Windows and then select [**Network**].

NOTE

When [**Network**] does not appear in the Start menu, perform the following procedure.

1 Right-click [**Start**] and click [**Property**] in the menu that appears.

2 Select the [**[Start] menu**] tab in the "**Task bar and [Start] menu properties**" screen, and click [**Customize**].

3 When the "**Customize [Start] menu**" screen appears, select the "**Network**" check box and click [**OK**].

2 Install the driver.

Right-click the machine's icon and then click [**Install**].

NOTE

If the "**User Account Control**" window appears, click [**Continue**].
If the "**Found New Hardware**" window appears, click [**Cancel**].

During the installation, double-click the icon shown on the task bar to display the "**Driver Software Installation**" screen. When "**Your devices are ready to use**" is displayed on the [**Driver Software Installation**] screen, the installation is completed.

For Windows 8 and Microsoft Windows Server 2012

1 Click [Search] in charms, [Control Panel], and then [View devices and printers].

2 Install the driver.

Click [**Add a device**]. Select the machine's icon and then click [**Next**].

When the machine's icon is displayed in "**Printers**" on the [**Devices and Printers**] screen, the installation is completed.

WSD scan

1 [Home] key > [Send]

2 Place the originals.

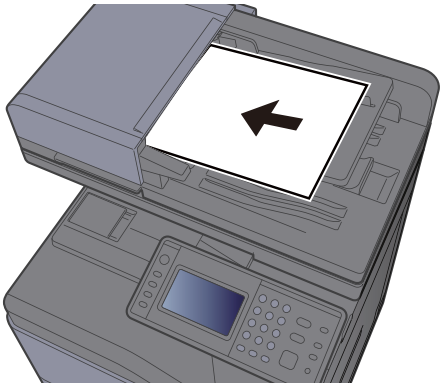

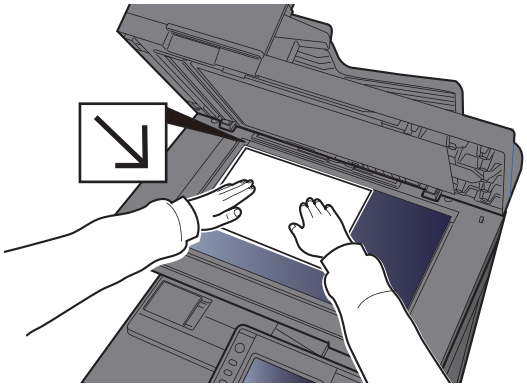

Loading Originals (page 5-2)

3 Display the screen.

Select [**WSD Scan**].

4 Scan the originals.

Procedure using this machine

1 Select [**From Operation Panel**].

2 Select the destination computer > [**OK**]

Select [**Reload**] to reload the computer list.

You can view information on the selected computer by selecting [ ].

3 Press the [**Start**] key.

Sending begins and the software installed on the computer is activated.

Procedure from Your Computer

1 [**From Computer**] > [**OK**]

2 Use the software installed on the computer to send the images.

Scanning with File Management Utility

File Management Utility is an application that sends a scanned document to a specified network folder or PC. You can create a work flow with FMU for processing of the scanned document, and register the workflow in the machine as a favorite.

Configuring Settings before Sending

To use this function, you must install File Management Utility on your computer and configure settings for the multifunction machine to be used, scanning conditions, and the file save location. To install File Management Utility, refer to the following.

Installing Software (page 2-30)

NOTE

For information on using File Management Utility, refer to the following:

File Management Utility User Guide

Recalling a Favorite Configured in FMU

1 Make sure that File Management Utility is running on the computer (or server) on which File Management Utility is installed.

2 Place the original.

3 Recall a favorite.

1 Select [**Favorites**] on the Home screen, or the key of the registered favorite.

If you selected the key of the favorite registered with FMU, the favorite is activated. If you selected [**Favorites**], proceed to the next step.

2 Select the key of the favorite you want to use.

4 Follow the on-screen instructions to enter the necessary information and press [Next].

5 When the scan settings screen appears, press each item and configure the necessary settings.

The features that can be set depend on File Management Utility.

6 Press the [Start] key.

Sending starts.

Sending to Different Types of Destinations (Multi Sending)

You can specify destinations that combine E-mail addresses, folders (SMB or FTP) and fax numbers (Fax functionality can only be used on products equipped with fax capability.). This is referred to as Multi Sending. This is useful for sending to different types of destination (E-mail addresses, folders, etc.) in a single operation.

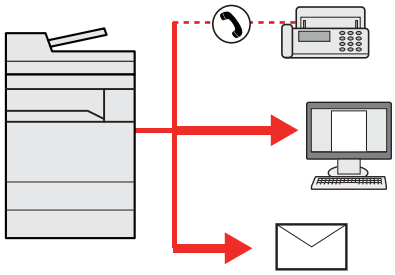

No. of broadcast items

E-mail: Up to 100

Folders (SMP, FTP): Total of 5 SMB and FTP

FAX: Up to 100

Procedures are the same as used in specifying the destinations of respective types. Continue to enter E-mail address or folder path so that they appear in the destination list. Press the [**Start**] key to start transmission to all destinations at one time.

NOTE

If the destinations include a fax, the images sent to all destinations will be black and white.

Send to Me (E-mail)

When user login is enabled, the document is sent to the E-mail address of the logged in user.

Configuring Settings before Sending

To use this function, configure the followings.

To use this function, the function icon must be displayed in the home screen.

Editing the Home Screen (page 2-13)

An E-mail address must be set in user login for the user who logs in.

Adding a User (Local User List) (page 9-5)

Sending a document to the mail address of the logged in user

The sending procedure using [E-mail] is as follows.

1 Select [Home] key.

2 Select [Send to Me (E-mail)] .

Canceling Sending Jobs

You can also cancel jobs by selecting the [**Stop**] key.

Canceling Scanning

The procedure to cancel the scanned document is as follows.

1 Select the [Stop] key with the send screen displayed.

2 Cancel a job.

When there is a job is being scanned

Job Cancel appears.

When there is a job sending or on standby

Canceling job screen appears.
Select the job you wish to cancel > [**Delete**] > [**Yes**]

NOTE
Selecting the [**Stop**] key will not temporarily stop a job that you have already started sending.

Handling Destination

This section explains how to select and confirm the destination.

Specifying Destination

Select the destination using either of the following methods except entering address directly:

- Choosing from the Address Book
  - Choosing from the Address Book (page 5-35)
- Choosing from the External Address Book

  For details on the External Address Book, refer to the following:
  - **Command Center RX User Guide**
- Choosing from One Touch key.
  - Choosing from the One Touch Key (page 5-38)
- Choosing from the FAX
  - **FAX System 11 Operation Guide**

NOTE

- You can set the machine up so that the address book screen appears when you select the [**Send**] key.

Default Screen (page 8-23)

- If you are using the products equipped with the fax function, you can specify the fax destination. Enter the other party number using the numeric keypad.

Choosing from the Address Book

Select a destination registered in the Address Book.

For more information about how to register destinations in the Address Book, refer to the following:

Registering Destinations in the Address Book (page 3-22)

1 In the basic screen for sending, select [Address Book].

NOTE

For details on the External Address Book, refer to the following:

- **Command Center RX User Guide**

2 Select the destinations.

Select the checkbox to select the desired destination from the list. The selected destinations are indicated by a checkmark in the check box.

You can also select [**Menu**] to perform a more detailed search.

NOTE

To deselect, select the checkbox again and remove the checkmark.

Destination Search

Destinations registered in the Address Book can be searched.

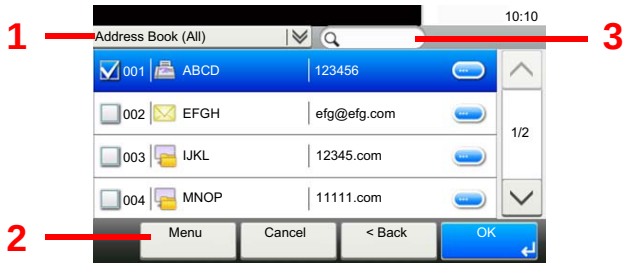

Keys used		Search type	Subjects searched
1		Advanced search by destination	Advanced search by type of registered destination (Email, Folder (SMB/FTP), FAX or Group).
2	**Narrow Down**	Advanced search by destination	Advanced search by type of registered destination (Email, Folder (SMB/FTP), FAX or Group).
	Search (Name)	Search by name	Search by registered name.
	Search (No.)	Search by number	Search by registered address number.
	Sort (Name)	Change of display order	Sorts the list by destination name.
	Sort (No.)		Sorts the list by destination address number.
3		Search by name	Search by registered name.

NOTE

You can specify a destination by address number by selecting the [**Quick No. Search**] key.

3 Accept the destination > [OK]

Destinations can be changed later.

Confirmation Screen of Destinations (page 5-39)

NOTE

You can set the default "Sort" settings.

Sort (page 8-25)

Choosing from the External Address Book

Select a destination registered in the external address book.

NOTE

For details on the External Address Book, refer to the following:

Command Center RX User Guide

1 In the basic screen for sending, select [External Address Book].

2 Select the destinations.

Select the checkbox to select the desired destination from the list. The selected destinations are indicated by a checkmark in the check box.

You can also select [**Menu**] to perform a more detailed search.

NOTE

To deselect, select the checkbox again and remove the checkmark.

3 Accept the destination > [OK]

Destinations can be changed later.

Confirmation Screen of Destinations (page 5-39)

NOTE

You can set the default "Sort" settings.

Sort (page 8-25)

Choosing from the One Touch Key

Select the destination using the One Touch Keys.

NOTE

This procedure assumes that One Touch Keys have already been registered.
For more information on adding One Touch keys, refer to the following:

Adding a Destination on One Touch Key (One Touch Key) (page 3-27)

1 In the basic screen for sending, select [One Touch Key].

2 Select the One Touch Keys where the destination is registered.

If the One Touch Keys for the desired destination is hidden on the touch panel, select [∨] or [∧] to scroll and view next or previous One Touch Keys.

NOTE

You can specify a One Touch Key by one touch number by selecting the [**Quick No. Search**] key.

3 Accept the destination > [OK]

Destinations can be changed later.

Confirmation Screen of Destinations (page 5-39)

Checking and Editing Destinations

Check and edit a selected destination.

1 Display the screen.

1 Specify the destination.

Specifying Destination (page 5-35)

2 Select [**Check**].

2 Check and edit the destination.

To add a new destination, select [➕].

To display details for the destinations, select [▭]. New E-mail addresses and PC folders can be edited if they have been specified.

To delete the selected destination, select [🗑].

NOTE

- When selecting [**On**] for Entry Check for New Destination, the confirmation screen appears. Enter the same host name and path again, and select [**OK**].

Entry Check for New Dest. (page 8-23)

- When selecting [**On**] for Destination Check before Send, the confirmation screen appears after pressing the [**Start**] key.

Dest. Check before Send (page 8-23)
Confirmation Screen of Destinations (page 5-39)

Confirmation Screen of Destinations

When selecting [**On**] for Destination Check before Send, the confirmation screen of destinations appears after pressing the [**Start**] key.

Dest. Check before Send (page 8-23)

Follow the steps below to confirm the destinations.

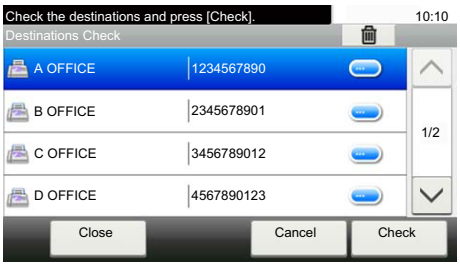

1 Select [∨] or [∧] to confirm all destination.

Selecting [ ] shows the detailed information of the selected destination.

To delete the destination, select the destination you want to delete > [ ] > [**Yes**]

To add the destination, select [**Cancel**] and then return to the destination screen.

2 Select [**Check**].

NOTE

Be sure to confirm all destination by displaying them on the touch panel. You cannot select [**Check**] unless you have confirmed all destination.

Recall

Recall is a function allowing you to send the last entered destination once again. When you want to send the image to the same destination, select [**Recall**], and you can call the destination you sent on the destination list.

1 Select [Recall].

The destination you sent is displayed on the destination list.

NOTE

When the last sending included FAX, folders and E-mail destinations, they are also displayed. If necessary, add or delete the destination.

2 Press the [Start] key.

Sending starts.

NOTE

- When [**On**] is selected in "Dest. Check before Send", a destination confirmation screen is displayed when you press the [**Start**] key.

Confirmation Screen of Destinations (page 5-39)

- Recall information is canceled in the following conditions.
  - When you turn the power off
  - When you send a next image (new recall information is registered)
  - When you log out

How to use the FAX Function

On products with a FAX function, it is possible to use the FAX function.

FAX System 11 Operation Guide

Using Document Boxes

Document Box is a function for saving print data from a computer and sharing it with multiple users.

The available Document Boxes are as follows: Custom Box, Job Box, removal USB memory, Subaddress Box, and Polling Box.

What is Custom Box?

Custom Box is a component box which you can create within the Document Box and store data for later retrieval. You can create or delete a Custom Box.

The following operations are possible:

- Creating a new Custom Box
- Printing Document in a Custom Box
- Saving scanned documents to a custom box
- Editing Documents in a Custom Box
- Deleting Documents in a Custom Box

NOTE

- To use Custom Box, an optional SSD must be installed in the machine.
- The operation on Custom Box you perform from operation panel can also be made using Command Center RX.

Command Center RX User Guide

What is Job Box?

Job Box is a generic name for the "Private Print/Stored Job Box", "Quick Copy/Proof and Hold Box", "Repeat Copy Box", and "Form for Form Overlay Box". These Job Boxes cannot be created or deleted by a user.

NOTE

- You can set up the machine so that temporary documents in job boxes are automatically deleted.

Deletion of Job Retention (page 8-24)

- For details on operating the Job Box, refer to the following:

Printing Data Saved in the Printer (page 4-10)

What is Removable Memory Box?

A USB memory stick can be connected to the USB memory slot on the machine to print a saved file. You can print data directly from the USB memory without a PC. Image files scanned using this machine can also be saved to USB memory in the PDF, TIFF, JPEG, XPS, OpenXPS or high compression PDF format (Scan to USB).

Sub Address Box/Polling Box

Sub Address Box/Polling Box store the fax data.

FAX System 11 Operation Guide

Basic Operation for Document Box

This section explains basic operations for document boxes, using examples where tasks are carried out with custom boxes.

NOTE

In the following explanation, it is assumed that user login administration is enabled. For details on User Logon privileges, refer to the following:

Editing Custom Box (page 5-44)

Box List

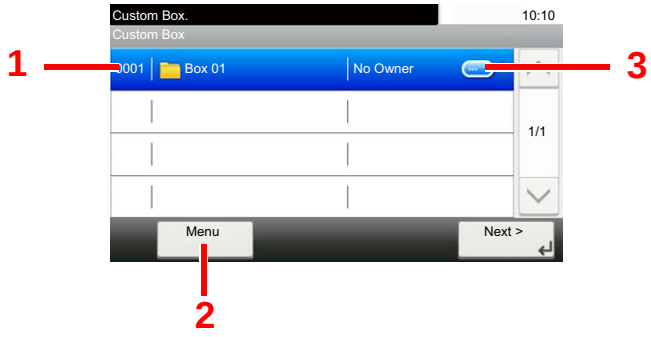

1 Opens the selected box.

2 Select [**Menu**] to search for document boxes (box names/box numbers), change the order of the display (box names/box numbers/owners), register new boxes, change boxes or delete boxes.

3 Displays the details for the selected box.

Document List

The document list is a list of the documents stored in the custom box. Documents can be listed either by name or as thumbnails. The list can be used as shown below.

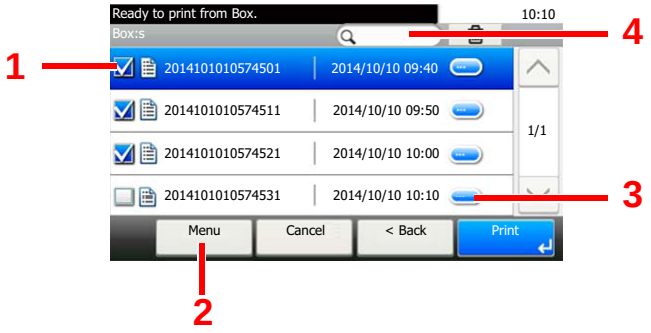

1 Selecting documents by checking checkboxes.

2 Select [**Menu**] to print, move, Search (File Name), Edit or delete documents, to select all or cancel all selections or to change the order of the display (name order/time order).

3 Display the details for the selected document.

4 A document can be searched for by document name.

NOTE

You can select multiple documents by selecting the respective document checkboxes.

Creating a New Custom Box

Follow the steps below to create a new Custom Box.

NOTE

- To use Custom Box, an optional SSD must be installed in the machine.
- If the user authentication screen appears, enter your login user name and login password and select [**Login**]. For this, you need to login with administrator privileges. The factory default login user name and login password are set as shown below.

  Login User Name: **3000**

  Login Password: **3000**
- If user login administration is enabled, log in with administrator privileges to perform the following operations. They cannot be performed with user privileges.
  - Creating a box
  - Deleting a box of which owner is another user.

1 Display the screen.

1 Select [**Custom Box**] on the Home screen.

2 [**Menu**] > [**Add**]

2 Create the Custom Box.

1 Enter the box name > [**Next**]

Up to 32 characters can be entered.

Character Entry Method (page 11-8)

2 Check the settings and change or add information as needed.

Item	Description
Box Name	Enter a box name consisting of up to 32 characters. Character Entry Method (page 11-8)
Box No.	Enter the box number by selecting [**+**], [**-**] or number keys. The box number can be from 0001 to 1000. A Custom Box should have a unique number. If you enter 0000, the smallest number available will be automatically assigned.
Owner[*1]	Set the owner of the box. Select the owner from the user list that appears.
Permission[*2]	Select whether to share the box.
Box Password	User access to the box can be restricted by specifying a password to protect the box. Entering a password is not mandatory. Enter the same password of up to 16 characters in both [**Password**] and [**Confirm Password**]. This can be set if [**Shared**] is selected in Permission.
Usage Restriction	The usage for a box can be restricted. To enable a capacity restriction enter a value for the storage capacity of the Custom Box in megabytes by selecting [**-**], [**+**] or number keys. You can enter a limit between 1 and 30,000 (MB).
Auto File Deletion	Automatically deletes stored documents after a set period of time. Select [**On**] to enable automatic deletion and then use [**+**] and [**-**] or the numeric keys to enter the number of days for which documents are stored. You can enter any number between 1 and 31 (day(s)). To disable automatic file deletion, select [**Off**].
Free Space	Displays the free space on the box.

Item	Description
Overwrite Setting	Specifies whether or not old stored documents are overwritten when new documents are stored. To overwrite old documents, select [**Permit**]. To retain old documents, select [**Prohibit**].
Delete after Printed	Automatically delete a document from the box once printing is complete. To delete the document, select [**On**]. To retain the document, select [**Off**].

*1 Displayed when the user login administration is enabled.
*2 Not displayed when "Owner" is set to [**No Owner**].

3 Select [**Save**].

The Custom Box is created.

Editing Custom Box

Follow the steps below to edit a Custom Box.

1 Display the screen.

Select [**Custom Box**] on the Home screen.

2 Edit the custom box.

1 [**Menu**] > [**Edit**]

2 Select the box you want to edit.

NOTE

- When you have logged in as a user, you can only edit a box whose owner is set to that user.
- When you have logged in as administrator, you can edit all boxes.

When user login administration is enabled, the settings that can be changed varies depending on the privileges of the logged in user.

Privileges	Settings that can be changed
Administrator	Box Name
	Box No.
	Owner
	Permission
	Box Password
	Usage Restriction
	Auto File Deletion
	Overwrite Setting
	Delete after Printed

Privileges	Settings that can be changed
User	Box Name
	Box Password
	Permission
	Auto File Deletion
	Overwrite Setting
	Delete after Printed

Creating a New Custom Box (page 5-43)

Deleting Custom Box

1 Display the screen.

Select [**Custom Box**] on the Home screen.

2 Delete the custom box.

1 [**Menu**] > [**Edit**]

2 Select the box you want to delete.

NOTE

- When you have logged in as a user, you can only delete a box whose owner is set to that user.
- When you have logged in as administrator, you can edit all boxes.

3 Select [**Yes**].

Storing Documents

Custom box stores the print data which is sent from a PC. For the operation of the printing from the PC, refer to the following:

Printer Driver User Guide

Printing Documents in Custom Box

The procedure for printing documents in a custom box is explained below.

1 Display the screen.

1 Select [**Custom Box**] on the Home screen.

2 Select the box containing the document you want to print.

> **NOTE**
> If a custom box is protected by a password, enter the correct password.

2 Print the document.

1 Select the document in the list that you want to print by selecting the checkbox.

The document is marked with a checkmark.

> **NOTE**
> To deselect, select the checkbox again and remove the checkmark.

2 Select [**Print**].

3 The print settings selection screen appears.

To use the settings used at the time of printing (when the document was saved), select [**Print As Is**] > specify the number of copies > [**OK**].

Printing starts.

To change the print settings, select [**Print after Change Settings**] and proceed to next step.

4 Set the paper selection, duplex printing, etc., as desired.

For the features that can be selected, refer to the following:

Custom Box (Printing) (page 6-6)

5 Press the [**Start**] key.

Printing of the selected document begins.

Moving Documents in Custom Box

This function allows you to move documents stored in custom boxes into other boxes. The procedure for moving documents is explained below.

1 Display the screen.

1 Select [**Custom Box**] on the Home screen.

2 Select the box containing the document you want to move.

> **NOTE**
> If a custom box is protected by a password, enter the correct password.

2 Move the documents.

1 Select the document in the list that you want to move by selecting the checkbox.

The document is marked with a checkmark.

NOTE
To deselect, select the checkbox again and remove the checkmark.

2 [**Menu**] > [**Move to Another Custom Box**]

3 Select the destination of move.

4 [**Select This Folder**] > [**Yes**]

The selected document is moved.

NOTE
If the box to which the document is to be moved is protected by a password, enter the correct password.

Deleting Documents in Custom Box

The procedure for deleting documents in a custom box is explained below.

1 Display the screen.

1 Select [**Custom Box**] on the Home screen.

2 Select the box containing the document you want to delete.

NOTE
If a custom box is protected by a password, enter the correct password.

2 Delete the document.

1 Select the document in the list that you want to delete by selecting the checkbox.

The document is marked with a checkmark.

NOTE
- [**Delete**] is disabled until a document is selected.
- To deselect, select the checkbox again and remove the checkmark.

2 [**Menu**] > [**Delete**]

3 [**Delete**] > [**Yes**]

The document is deleted.

Operating using Removable USB Memory

Plugging USB memory directly into the machine enables you to quickly and easily print the files stored in the USB memory without having to use a computer.

The following file types can be printed:

- PDF file (Version 1.7 or older)
- TIFF file (TIFF V6/TTN2 format)
- JPEG file
- XPS file
- OpenXPS file
- Encrypted PDF file

In addition, you can store scanned image files in USB memory connected to the machine.

The following file types can be stored:

- PDF file format
- TIFF file format
- JPEG file format
- XPS file format
- OpenXPS file format
- High-compression PDF file format

Printing Documents Stored in Removable USB Memory

The procedure for printing documents stored in a removal USB memory is explained below.

NOTE

- PDF files you wish to print should have an extension (.pdf).
- Files to be printed should be saved no further down than the top 3 folder levels, including the root folder.
- Use USB memory properly formatted by this machine.
- Plug the USB memory directly into the USB Memory Slot.

1 Plug the USB memory.

1 Plug the USB memory into the USB Memory Slot.

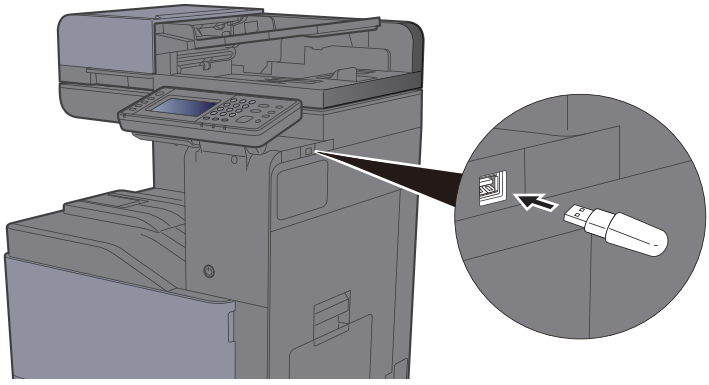

2 When the machine reads the USB memory, "Removable Memory is recognized. Displaying files. Are you sure?" may appear. Select [**Yes**].

Displays the removable memory screen.

NOTE

If the message does not appear, select [**Removable Memory**] on the Home screen.

2 Print the document.

1 Select the folder containing the file to be printed.

The machine will display documents in the top 3 folder levels, including the root folder.

NOTE

- 1,000 documents can be displayed.
- To return to a higher level folder, select [**Back**].

2 Select the file to be printed > [**Print**]

3 Change the number of copies, duplex printing, etc. as desired.

For the features that can be selected, refer to the following:

Removable Memory (Store File, Printing Documents) (page 6-7)

4 Press the [**Start**] key.

Printing of the selected file begins.

Saving Documents to USB Memory (Scan to USB)

The procedure for storing scanned documents to a removal USB memory is explained below.

NOTE
The maximum number of the storable files is 1,000.

1 Place the originals.

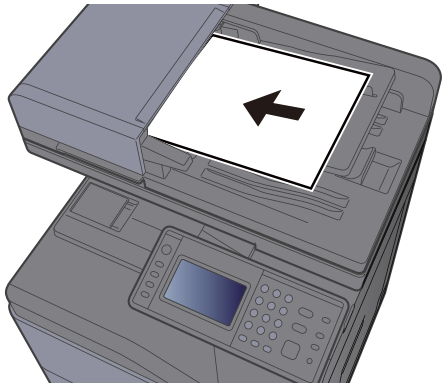

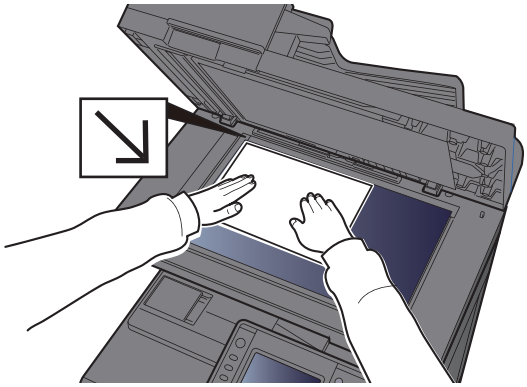

Loading Originals (page 5-2)

2 Plug the USB memory.

1 Plug the USB memory into the USB Memory Slot.

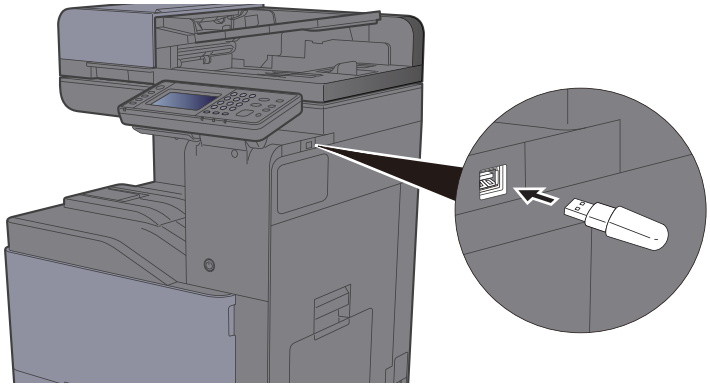

2 When the machine reads the USB memory, "Removable Memory is recognized. Displaying files. Are you sure?" may appear. Select [**Yes**] to display the removable memory screen.

NOTE
If the message does not appear, select [**Removable Memory**] on the Home screen.

3 Store the document.

1 Select the folder where the file will be stored.

The machine will display the top 3 folder levels, including the root folder.

2 Select [➕].

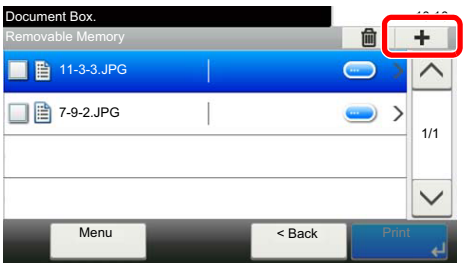

3 Set the type of original, file format, etc., as desired.

For the features that can be set, refer to the following:

Removable Memory (Store File, Printing Documents) (page 6-7)

4 Press the [**Start**] key.

The original is scanned and the data is stored in the USB memory.

Check the USB Memory Information

You can check the USB memory information.

1 In the removable memory screen, select [Menu] > [Memory Information].

2 Once you confirm the information, select [Close].

Removing USB Memory

Follow the steps below to remove the USB memory.

IMPORTANT

Be sure to follow the proper procedure to avoid damaging the data or USB memory.

1 Display the screen.

Select [**Removable Memory**] on the Home screen.

2 [Menu] > [Remove Memory]

Select [**OK**], and remove the USB memory after "Removable Memory can be safely removed." is displayed.

NOTE

USB memory can also be removed after checking the status of the device.

Device/Communication (page 7-11)

6 Using Various Functions

This chapter explains the following topics:

Functions Available on the Machine 6-2
About Functions Available on the Machine 6-2
How to Select Functions 6-2
Copy 6-2
Send 6-4
Custom Box (Printing) 6-6
Removable Memory (Store File, Printing Documents) 6-7
Functions 6-9
Original Size 6-9
Paper Selection 6-10
Original Orientation 6-11
Mixed Size Originals 6-12
Collate/Offset 6-12
Staple 6-13
Paper Output 6-15
Density 6-16
Original Image 6-16
EcoPrint 6-17
Color Selection 6-18
Color Balance 6-19
Hue Adjustment 6-20
Sharpness 6-21
Contrast 6-21
Background Density Adj. (Background Density Adjustment) 6-22
Saturation 6-22
Prevent Bleed-through 6-23
Zoom 6-23
Combine 6-25
Duplex 6-27
Continuous Scan 6-28
Job Finish Notice 6-29
File Name Entry 6-29
Priority Override 6-30
Quiet Mode 6-30
Skip Blank Page 6-30
Duplex (2-sided Original) 6-31
Sending Size 6-32
File Format 6-33
File Separation 6-36
Scan Resolution 6-36
E-mail Subject/Body 6-36
FTP Encrypted TX 6-37
Delete after Print 6-37
Storing Size 6-38
Encrypted PDF Password 6-38
JPEG/TIFF Print 6-39
XPS Fit to Page 6-39

Functions Available on the Machine

About Functions Available on the Machine

This machine provides the various functions available.

How to Select Functions

To configure the settings for functions, select the function key. By selecting [**Functions**], other selectable functions will be shown as a list.

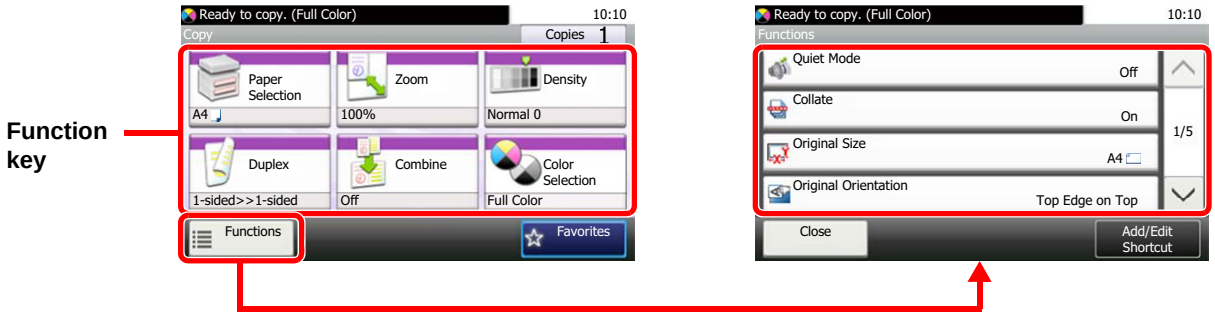

Copy

For details on each function, see the table below.

Function key	Description	Reference page
Paper Selection	Select the cassette or multi-purpose tray that contains the required paper size.	page 6-10
Zoom	Adjust the zoom to reduce or enlarge the image.	page 6-23
Density	Adjust density.	page 6-16
Duplex	Produces two-sided copies. You can also create single-sided copies from two-sided originals.	page 6-27
Combine	Combines 2 or 4 original sheets into 1 printed page.	page 6-25
Color Selection	Select the color mode setting.	page 6-18

Functions	Description	Reference page
Quiet Mode	Lower print and scan speed for quiet processing.	page 6-30
Collate/Offset	Offsets the output by page or set.	page 6-12
Original Size	Specify the original size to be scanned.	page 6-9
Original Orientation	Select the orientation of the original document top edge to scan correct direction.	page 6-11
Mixed Size Originals	Scans all sheets in the document processor, even if they are of different sizes.	page 6-12
Paper Output	Specify the output tray.	page 6-15
Staple	Staples printed documents.	page 6-13
Original Image	Select original image type for best results.	page 6-16
EcoPrint	EcoPrint saves toner when printing.	page 6-17

Functions	Description	Reference page
Hue Adjustment	Adjust the color (hue) of images.	page 6-20
Color Balance	Adjust the strength of cyan, magenta, yellow, and black.	page 6-19
Sharpness	Adjusts the sharpness of image outlines.	page 6-21
Contrast	You can adjust the contrast between light and dark areas of the image.	page 6-21
Background Density Adj.	Removes dark background from originals, such as newspapers.	page 6-22
Prevent Bleed-through	Hides background colors and image bleed-through when scanning thin original.	page 6-23
Skip Blank Page	When there are blank pages in a scanned document, this function skips the blank pages and prints only pages that are not blank.	page 6-30
Saturation	Adjust the color saturation of the image.	page 6-22
Continuous Scan	Scans a large number of originals in separate batches and then produce as one job.	page 6-28
Job Finish Notice	Sends E-mail notice when a job is complete.	page 6-29
File Name Entry	Adds a file name.	page 6-29
Priority Override	Suspends the current job and gives a new job top priority.	page 6-30

Send

To configure the settings for functions, select [**Functions**].

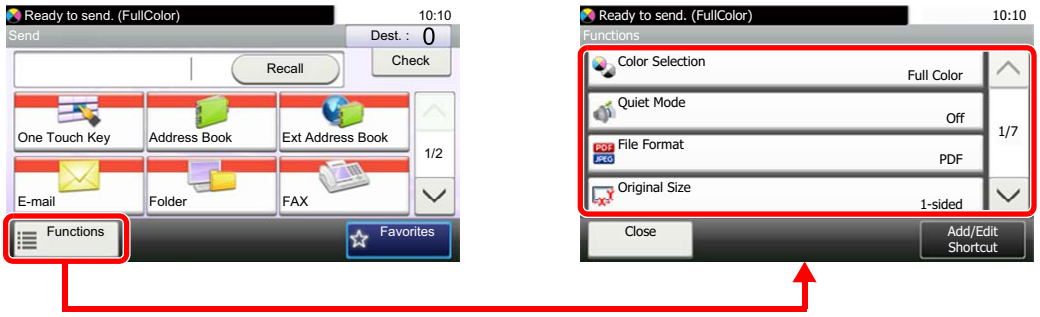

For details on each function, see the table below.

Functions	Description	Reference page
Color Selection	Select the color mode setting.	page 6-18
Quiet Mode	Lower print and scan speed for quiet processing.	page 6-30
File Format	Specify the image file format. Image quality level can also be adjusted.	page 6-33
Original Size	Specify the original size to be scanned.	page 6-9
Original Orientation	Select the orientation of the original document top edge to scan correct direction.	page 6-11
Mixed Size Originals	Scans all sheets in the document processor, even if they are of different sizes.	page 6-12
Duplex	Select the type and orientation of the binding based on the original.	page 6-31
Sending Size	Select size of image to be sent.	page 6-32
File Separation	Creates several files by dividing scanned original data page by page, and sends the files.	page 6-36
Scan Resolution	Select fineness of scanning resolution.	page 6-36
Density	Adjust density.	page 6-16
Original Image	Select original image type for best results.	page 6-16
Sharpness	Adjusts the sharpness of image outlines.	page 6-21
Contrast	You can adjust the contrast between light and dark areas of the image.	page 6-21
Background Density Adj.	Removes dark background from originals, such as newspapers.	page 6-22
Prevent Bleed-thru	Hides background colors and image bleed-through when scanning thin original.	page 6-23
Skip Blank Page	When there are blank pages in a scanned document, this function skips the blank pages and prints only pages that are not blank.	page 6-30
FAX TX Resolution	Select fineness of images when sending FAX.	Refer to the **FAX System 11 Operation Guide**.
Zoom	Adjust the zoom to reduce or enlarge the image.	page 6-23
Continuous Scan	Scans a large number of originals in separate batches and then produce as one job.	page 6-28
File Name Entry	Adds a file name.	page 6-29
E-mail Subject/Body	Adds subject and body when sending a document.	page 6-36

Functions	Description	Reference page
Job Finish Notice	Sends E-mail notice when a job is complete.	page 6-29
FTP Encrypted TX	Encrypts images when sending via FTP.	page 6-37
FAX Delayed Transmission	Set a send time.	Refer to the **FAX System 11 Operation Guide**.
FAX Direct Transmission	Sends FAX directly without reading original data into memory.	Refer to the **FAX System 11 Operation Guide**.
FAX Polling RX	Dial the destination and receive documents for Polling Transmission stored in the polling box.	Refer to the **FAX System 11 Operation Guide**.
FAX TX Report	Print a report of FAX transmission results.	Refer to the **FAX System 11 Operation Guide**.

Custom Box (Printing)

To configure the settings for functions, select the function key. By selecting [**Functions**], other selectable functions will be shown as a list.

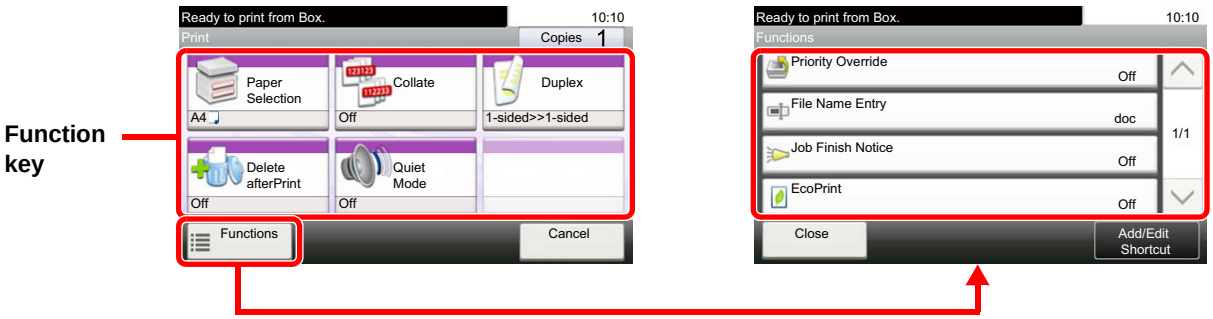

For details on each function, see the table below.

Function key	Description	Reference page
Paper Selection	Select the cassette or multi-purpose tray that contains the required paper size.	page 6-10
Collate/Offset	Offsets the output by page or set.	page 6-12
Duplex	Print a document on both sides of the paper.	page 6-28
Delete after Print	Automatically deletes a document from the box once printing is complete.	page 6-37
Quiet Mode	Lower print and scan speed for quiet processing.	page 6-30

Functions	Description	Reference page
Paper Output	Specify the output tray.	page 6-15
Staple	Staples printed documents.	page 6-13
Priority Override	Suspends the current job and gives a new job top priority.	page 6-30
File Name Entry	Adds a file name.	page 6-29
Job Finish Notice	Sends E-mail notice when a job is complete.	page 6-29
EcoPrint	EcoPrint saves toner when printing.	page 6-17

Removable Memory (Store File, Printing Documents)

To configure the settings for functions, select the function key. By selecting [Functions], other selectable functions will be shown as a list.

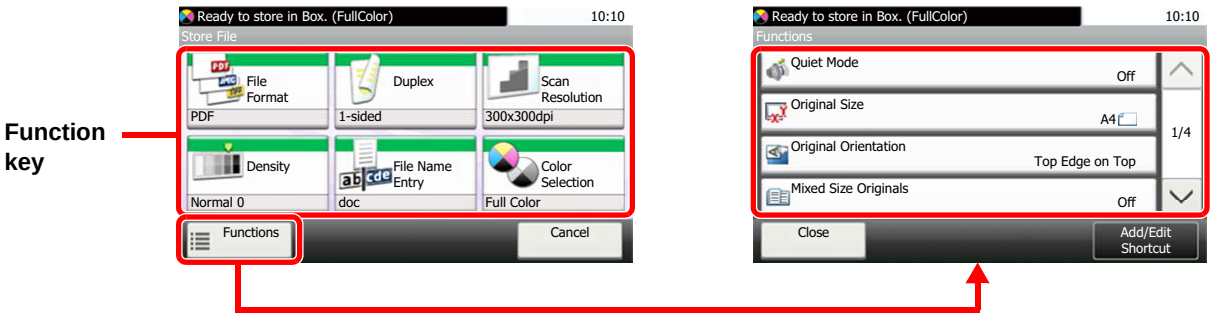

For details on each function, see the table below.

Store File

Function key	Description	Reference page
File Format	Specify the image file format. Image quality level can also be adjusted.	page 6-33
Duplex	Select the type and orientation of the binding based on the original.	page 6-31
Scan Resolution	Select fineness of scanning resolution.	page 6-36
Density	Adjust density.	page 6-16
File Name Entry	Adds a file name.	page 6-29
Color Selection	Select the color mode setting.	page 6-18

Functions	Description	Reference page
Quiet Mode	Lower print and scan speed for quiet processing.	page 6-30
Original Size	Specify the original size to be scanned.	page 6-9
Original Orientation	Select the orientation of the original document top edge to scan correct direction.	page 6-11
Mixed Size Originals	Scans all sheets in the document processor, even if they are of different sizes.	page 6-12
Storing Size	Select size of image to be stored.	page 6-38
Original Image	Select original image type for best results.	page 6-16
Sharpness	Adjusts the sharpness of image outlines.	page 6-21
Contrast	You can adjust the contrast between light and dark areas of the image.	page 6-21
Background Density Adj.	Removes dark background from originals, such as newspapers.	page 6-22
Prevent Bleed-through	Hides background colors and image bleed-through when scanning thin original.	page 6-23
Skip Blank Page	When there are blank pages in a scanned document, this function skips the blank pages and prints only pages that are not blank.	page 6-30
Zoom	Adjust the zoom to reduce or enlarge the image.	page 6-23
Continuous Scan	Scans a large number of originals in separate batches and then produce as one job.	page 6-28

Functions	Description	Reference page
Job Finish Notice	Sends E-mail notice when a job is complete.	page 6-29
File Separation	Creates several files by dividing scanned original data page by page, and sends the files.	page 6-36

Printing Documents

Function key	Description	Reference page
Paper Selection	Select the cassette or multi-purpose tray that contains the required paper size.	page 6-10
Collate	Offsets the output by page or set.	page 6-12
Duplex	Print a document on both sides of the paper.	page 6-28
Quiet Mode	Lower print and scan speed for quiet processing.	page 6-30
Color Selection	Select the color mode setting.	page 6-18

Functions	Description	Reference page
Paper Output	Specify the output tray.	page 6-15
Staple	Staples printed documents.	page 6-13
EcoPrint	EcoPrint saves toner when printing.	page 6-17
Job Finish Notice	Sends E-mail notice when a job is complete.	page 6-29
Priority Override	Suspends the current job and gives a new job top priority.	page 6-30
Encrypted PDF Password	Enter the preassigned password to print the PDF data.	page 6-38
JPEG/TIFF Print	Select the image size when printing JPEG or TIFF files.	page 6-39
XPS Fit to Page	Reduces or enlarges the image size to fit to the selected paper size when printing XPS file.	page 6-39

Functions

On pages that explain a convenient function, the modes in which that function can be used are indicated by icons.

Printing: 





Sending: 

Storing: 

Original Size







Specify the original size to be scanned.

Select [**Auto (for DP)**], [**Metric**], [**Inch**], or [**Others**] to select the original size.

Item	Value	Description
Auto (for DP)	—	Automatically detect the original size.
Inch	Letter, Legal, Statement, Executive, Oficio II	Select from the Inch series standard sizes.
Metric	A4, A5, A6, B5, B6, Folio, 216 × 340 mm	Select from the Metric standard sizes.
Others	16K, ISO B5, Envelope #10, Envelope #9, Envelope #6, Envelope Monarch, Envelope DL, Envelope C5, Hagaki (Cardstock), Oufuku Hagaki (Return postcard), Youkei 4, Youkei 2, Custom*1	Select from special standard sizes and custom sizes.

*1 For instructions on how to specify the custom original size, refer to the following:
Custom Original Size (page 8-11)

NOTE

Select whether to automatically detect originals of the document processor.

Auto Detect Original Size (DP) (page 8-11)

Be sure to always specify the original size when using custom size original.

Paper Selection

Copy Print from Box Print from USB

Select the cassette or multi-purpose tray that contains the required paper size.

Select from [1] (Cassette 1) to [4] (Cassette 4) to use the paper contained in that cassette.

If [**Auto**] is selected, the paper matching the size of the original is selected automatically.

NOTE

- Specify in advance the size and type of the paper loaded in the cassette.

Cassette/MP Tray Settings (page 8-8)

- Cassettes 2 to 4 are displayed when the optional paper feeder is installed.

To select [**MP tray**], select [**Paper Size**] and [**Media Type**], and specify the paper size and the media type. The available paper sizes and media types are shown in the table below.

Item		Value	Description
Paper Size	**Inch**	Letter*1, Legal*1, Statement*1, Executive, Oficio II	Select from the Inch series standard sizes.
	Metric	A4*1, A5*1, A6*1, B5*1, B6*1, Folio*1, 216 × 340 mm	Select from the Metric standard sizes.
	Others	16K, ISO B5, Envelope #10, Envelope #9, Envelope #6, Envelope Monarch, Envelope DL, Envelope C5, Hagaki (Cardstock), Oufuku Hagaki (Return postcard), Youkei 4, Youkei 2, Custom*2	Select from special standard sizes and custom sizes.
	Size Entry	Metric X: 148 to 356 mm (in 1 mm increments) Y: 70 to 216 mm (in 1 mm increments)	Enter the size not included in the standard size.*3 When you have selected [**Size Entry**], use [+]/[-] or the numeric keys to set the sizes of "X" (horizontal) and "Y" (vertical).
		Inch X: 5.83 to 14.02" (in 0.01" increments) Y: 2.76 to 8.50" (in 0.01" increments)	
Media type		Plain (60 to 105 g/m^2), Transparency, Rough, Vellum (60 to 105 g/m^2), Labels, Recycled, Preprinted*4, Bond, Cardstock, Color, Prepunched*4, Letterhead*4, Envelope, Thick (106 to 220 g/m^2), Coated, High Quality, Custom 1-8*4	

*1 Paper size is automatically detected in the cassette.

*2 For instructions on how to specify the custom paper size, refer to the following:

Custom Paper Size (page 8-13)

*3 The input units can be changed in System Menu. For details, refer to the following:

Measurement (page 8-20)

*4 For instructions on how to specify the custom paper types 1 to 8, refer to the following:

Media Type Setting (page 8-15)

To print on preprinted or prepunched paper or on letterhead, refer to the following:

Special Paper Action (page 8-14)

NOTE

- You can conveniently select in advance the size and type of paper that will be used often and set them as default.

Multi Purpose Tray (page 8-9)

- If the specified size of paper is not loaded in the paper source cassette or multi purpose tray, a confirmation screen appears. Load the required paper in the multi purpose tray and select [**Continue**] to start copying.

Original Orientation

Copy Send Scan to USB

Select the orientation of the original document top edge to scan correct direction.

To use any of the following functions, the document's original orientation must be set.

- Duplex
- Combine
- Duplex (2-sided Original)

Select original orientation from [**Top Edge on Top**] or [**Top Edge on Left**].

Item	Image
Top Edge on Top	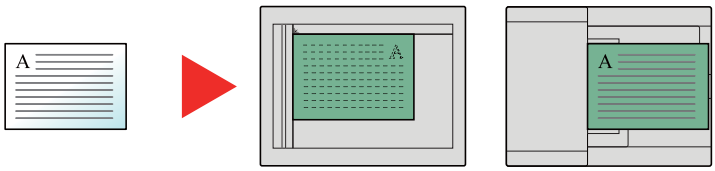 Original Original orientation
Top Edge on Left	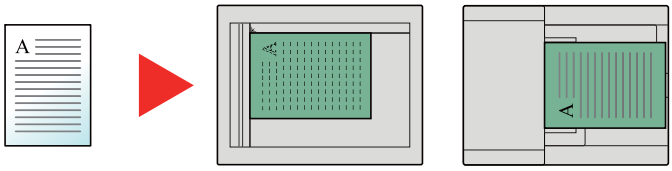 Original Original orientation

NOTE

The default setting for Original Orientation can be changed.

Original Orientation (page 8-16)

Mixed Size Originals

Copy Send Scan to USB

Scans all sheets in the document processor, even if they are of different sizes.

(**Value**: [**Off**] / [**On**])

Supported Combinations of Originals

Legal and Letter (Folio and A4)

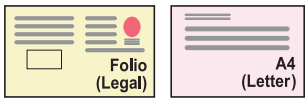

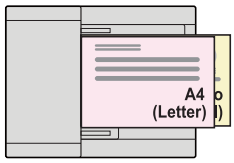

Collate/Offset

Copy Print from Box Print from USB

Offsets the output by page or set.

NOTE

This function requires the optional Sheet Finisher.

Innner Finisher (page 11-24)

Without Optional Sheet Finisher*

(**Value**: [**Off**] / [**On**])

* Collate Only

With Optional Sheet Finisher

(**Value**: [**Off**] / [**Collate Only**] / [**Offset Each Page**] / [**Offset Each Set**])

Item	Image	Description
Collate Only	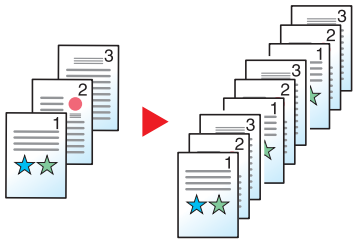	Scans multiple originals and delivers complete sets of copies as required according to page number.

Item	Image	Description
Offset Each Page	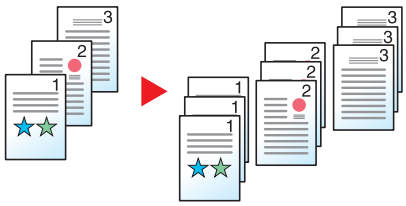	Printed copies are collated and output as individual pages separately.
Offset Each Set	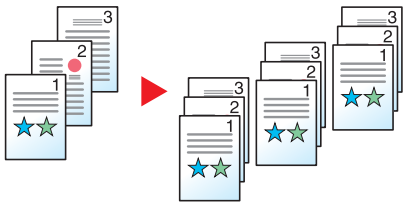	Printed copies are collated and output as individual set separately.

NOTE

The paper sizes supported in Offset are Legal, Oficio II, Letter, Folio, A4, 16K and 216×340mm.

Staple

Copy Print from Box Print from USB

Staples the finished documents. The staple position can be selected.

NOTE

This function requires the optional Sheet Finisher.

For details on paper sizes and numbers of sheets that can be stapled, refer to the following:

Innner Finisher (page 11-24)

Item	Value		Description
Staple	Off		
	1 staple		Select the staple position. For details on original orientation and staple position, refer to the following: Original Orientation and Staple Position (page 6-14)
	2 staple		
	Others	1 staple (Top Left)	
		1 staple (Top Right)	
		2 staples (Left)	
		2 staples (Top)	
		2 staples (Right)	
Original Orientation	Top Edge on Top, Top Edge on Left		Select the orientation of the original document top edge to scan correct direction. Select [**Original Orientation**] to choose orientation of the originals, either [**Top Edge on Top**] or [**Top Edge on Left**]. Then select [**OK**].

Original Orientation and Staple Position

Image		Original Orientation	
Original	Print results		
		Top Edge on Top	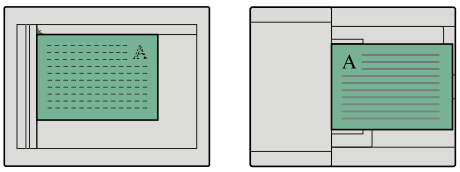
		Top Edge on Left	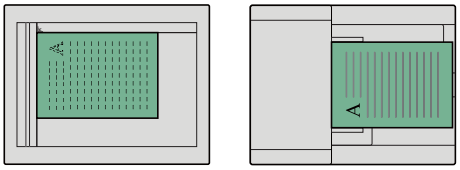

NOTE

Two position staple is not available for long edge paper orientation.
Two position staple is not available for B5 paper.

Mixed Size Stapling

Even with mixed paper sizes, if the sizes have the same width, the output can be stapled. The size of sheets that can be stapled together is Letter and Legal. Up to 30 sheets can be stapled.

NOTE

When performing Mixed Size Stapling, refer to the following:

Mixed Size Originals (page 6-12)

Paper Output

Copy Print from Box Print from USB

Specify the output tray.

NOTE

This function requires the optional Job Separator or Mailbox.

The default setting for Paper Output can be changed.

Paper Output (page 8-18)

With Optional Job Separator

Item	Description
Inner tray	Outputs to the Inner Tray of the machine.
Job Separator Tray	Delivery to the Inner Job Separator.

With Optional Mailbox

Item	Description
Inner tray	Outputs to the Inner Tray of the machine.
Tray A, Tray 1 to 5	Delivery to tray A, tray 1 to 5 (tray 1 is the uppermost tray) of the optional Mailbox. When [**Heavy 3**] (164 g/m^2 -) or higher is set in Paper Weight and Mailbox (Option) is set for the output destination, the output destination is automatically changed to the tray A.

Density

Copy Send Scan to USB

Adjust density.

Adjust density selecting [**-4**] (Lighter) to [**+4**] (Darker).



Original Image

Copy Send Scan to USB

Select original image type for best results.

Copying/Printing

Item			Description
Text+Photo[*1]			Best for mixed text and photo documents.
Photo			Best for photos taken with a camera.
Text			Best for documents that are mostly text.
Graphic/Map[*2]			Best for graphics and maps.
Printer Output[*2]			Best for documents printed on this machine originally.
Others	**Original Image**	**Text+Photo**	Select to bring out text and markings made with a highlighter pen. Reproduces the color of the highlighter pen to the extent possible.
		Photo	
		Text	
		Graphic/Map	
		Printer Output	
	Highlighter		

*1 If gray text is not printed completely using [**Text + Photo**], selecting [**Text**] may improve the result.

*2 This function is displayed while copying.

Sending/Storing

Item	Description
Text+Photo	Best for mixed text and photo documents.
Photo	Best for photos taken with a camera.
Text	Best for documents that are mostly text.
Light Text/Fine Line	Clearly reproduces faint characters written in pencil, etc., and thin lines on map originals or diagrams.
Text (for OCR)[*1]	Scanning produces an image that is suitable for OCR.

*1 This function is only available when "Color Selection" is set to [**Black & White**]. For details, refer to the following:
Color Selection (page 6-18)

EcoPrint

Copy | Print from Box | Print from USB

EcoPrint saves toner when printing.

Use this function for test prints or any other occasion when high quality print is not required.

(**Value**: [**Off**] / [**On**])

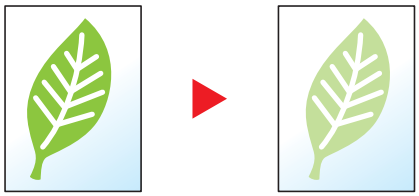

Color Selection



Select the color mode setting.

Copying

Item		Description
Auto Color		Automatically recognizes whether documents are color or black and white.
Full Color		Prints documents in full color.
Black & White		Prints documents in black and white.
Single Color	**Cyan**	Specify one of the colors and produce copies in that color regardless of original type.
	Magenta	
	Yellow	
	Red	
	Green	
	Blue	

Printing

Item	Description
Full Color	Prints documents in full color.
Black & White	Prints documents in black and white.

Sending/Storing

Item	Description
Auto (Color/Gray)	Automatically recognizes whether the document is color or black and white, and scan color documents in Full Color and black and white documents in Grayscale.
Auto (Color/B & W)	Automatically recognizes whether the document is color or black and white, and scan color documents in Full Color and black and white documents in Black and White.
Full Color	Scans the document in full color.
Grayscale	Scans the document in grayscale. Produces a smooth, detailed image.
Black & White	Scans the document in black and white.

Color Balance

Copy

Adjust the strength of cyan, magenta, yellow, and black.

Example:

Less Magenta **Original** **More Magenta**



Item		Description
Off		
On	**Cyan**	Select [〈] or [〉] on each side of the color (Cyan, Magenta, Yellow, Black) to adjust each color.
	Magenta	
	Yellow	
	Black	

NOTE

This feature is used with full color and auto color copying.

Hue Adjustment

Copy

Adjust the color (hue) of images.
Make adjustments such as adjusting red to a strong yellow-red or yellow to a strong green-yellow to make more creative copies.

Original



When adjusting yellow to more green, blue to more magenta (the ▼ part)

When adjusting yellowish-red to more yellow, bluish-cyan to more blue (the ▼ part)

Item	Description
Off	
All	Adjust hue for all colors. Select [<] or [>] to adjust the hue.
Individual	Select individual colors to adjust the hue. Select [**Red**], [**Yellow**], [**Green**], [**Cyan**], [**Blue**] or [**Magenta**] and then select [<] or [>] to adjust the hue.

NOTE

This feature is used with full color and auto color copying.

These adjustments are especially useful on rich color images.

Sharpness

Copy Send Scan to USB

Adjusts the sharpness of image outlines.

When copying penciled originals with rough or broken lines, clear copies can be taken by adjusting sharpness toward "Sharpen". When copying images made up of patterned dots such as magazine photos, in which moire*1 patterns appear, edge softening and weakening of the moire effect can be obtained by setting the sharpness toward "Blur".

Less Sharp **Original** **More Sharp**



Item	Description
[+1] to [+3] (Sharpen)	Emphasizes the image outline.
[-1] to [-3] (Blur)	Blurs the image outline. Can weaken a Moire*1 effect.

*1 Patterns that are created by irregular distribution of halftone dots.

Contrast

Copy Send Scan to USB

You can adjust the contrast between light and dark areas of the image.

Lower **Original** **Higher**



Item	Description
[+1] to [+4] (Higher)	Increases the sharpness of colors.
[-1] to [-4] (Lower)	Creates smoother colors.

Background Density Adj. (Background Density Adjustment)

Copy Send Scan to USB

Removes dark background from originals, such as newspapers.

This feature is used with full color and auto color. Background Density Adjustment is disabled if Auto Color detects black and white originals.

If the ground color is obtrusive, select [**Auto**]. If [**Auto**] does not remove the ground color, select [**Manual**] and adjust the density of the ground color.

Item	Description
Off	Does not adjust the ground color.
Auto	Automatically adjusts the background density based on the original.
Manual	Select [**1**] to [**5**] (Lighter - Darker) to adjust the background density manually.

Saturation

Copy

Adjust the color saturation of the image.

Grayish



Results in paler color.

Original



Vivid



Results in more vivid color.

NOTE

This feature is used with full color and auto color. Saturation is disabled if Auto Color detects black and white originals.

Item	Description
[-1] to [-3] (Grayish)	Results in paler color.
[+1] to [+3] (Vivid)	Results in more vivid color.

Prevent Bleed-through

Copy Send Scan to USB

Hides background colors and image bleed-through when scanning thin original.

(**Value**: [**Off**] / [**On**])

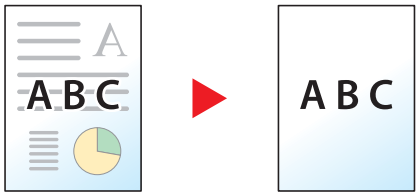

Zoom

Copy Send Scan to USB

Adjust the zoom to reduce or enlarge the image.

Copying

The following zoom options are available.

Auto

Adjusts the image to match the paper size.

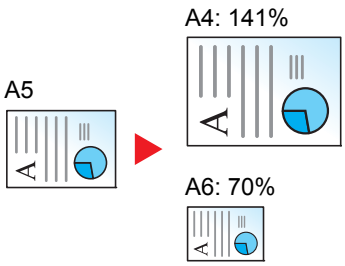

Standard Zoom

Reduces or enlarges at preset magnifications.

Model	Zoom Level (Original Copy)		Model	Zoom Level (Original Copy)	
Metric Models	400% Max.	90% Folio>>A4	Inch Models	400% Max.	78% Legal>>Letter
	200%	70%		200%	64% Letter>>Statement
	141% A5 >> A4	50%		129% Statement>>Letter	50%
	100%	25% Min.		100%	25% Min.

Others

Reduces or enlarges at magnifications other than the Standard Zoom.

Model	Zoom Level (Original Copy)		Model	Zoom Level (Original Copy)	
Metric Models	115% B5 >> A4	78% Legal>>Letter	Inch Models	141% A5 >> A4	86% A4 >> B5
	86% A4 >> B5	64% Letter>>Statement		115% B5 >> A4	70% A4 >> A5
	129% Statement>>Letter			90% Folio>>A4	

Zoom Entry

Manually reduces or enlarges the original image in 1% increments between 25% and 400%. Use the numeric keys or select [+] or [-] to enter the any magnification.

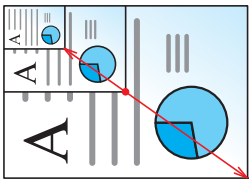

Sending/Storing

Item	Description
100%	Reproduces the original size.
Auto	Reduces or enlarges original to sending/storing size.

NOTE

To reduce or enlarge the image, select the paper size, sending size, or storing size.

Paper Selection (page 6-10)
Sending Size (page 6-32)
Storing Size (page 6-38)

Combine

Copy

Combines 2 or 4 original sheets into 1 printed page.

You can select the page layout and the type of boundary lines around the pages.

The following types of the boundary lines are available.

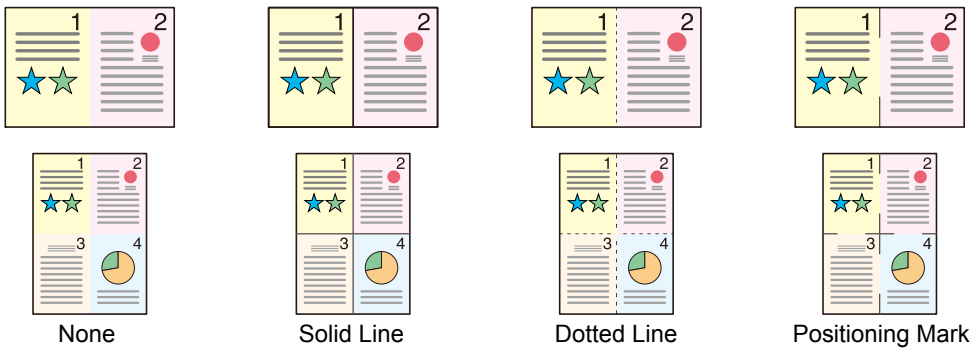

Item		Value	Description
Off		—	Disables the function.
2 in 1		—	Copy the original with the default setting. For the default settings, refer to the following: ➡ Function Defaults (page 8-16)
4 in 1		—	
Others	**Combine**	Off, 2 in 1 (L to R/T to B), 2 in 1 (R to L/B to T), 4 in 1 (Right then Down), 4 in 1 (Left then Down), 4 in 1 (Down then Right), 4 in 1 (Down then Left)	Select the page layout of scanned originals.
	Border Line	None, Solid Line, Dotted Line, Positioning Mark	Select the boundary line type.
	Original Orientation	Top Edge on Top, Top Edge on Left	Select the orientation of the original document top edge to scan correct direction.

Layout image

Item		Image
2 in 1	L to R/T to B	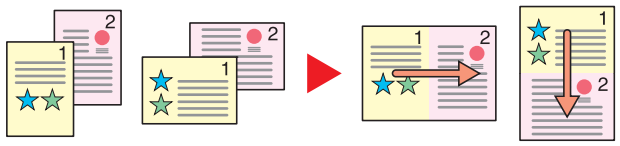
	R to L/B to T	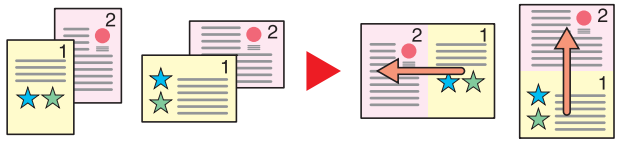
4 in 1	Right then Down	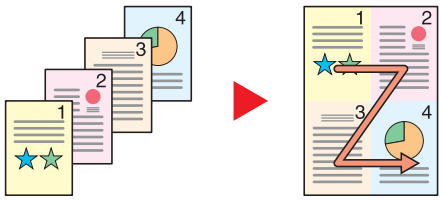
	Left then Down	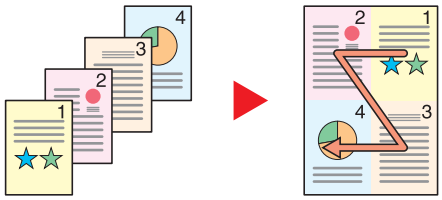
	Down then Right	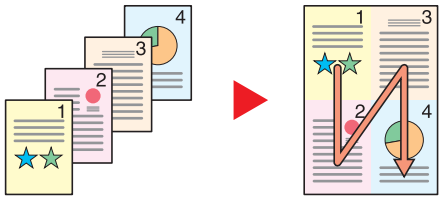
	Down then Left	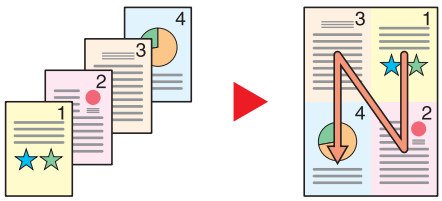

NOTE

- The paper sizes supported in Combine mode are A4, A5, B5, Folio, 216 × 340 mm, Letter, Legal, Statement, Oficio II, and 16K.
- When placing the original on the platen, be sure to copy the originals in page order.

Duplex

Copy | Print from Box | Print from USB

Produces two-sided copies. You can also create single-sided copies from two-sided originals.

The following modes are available.

One-sided to Two-sided

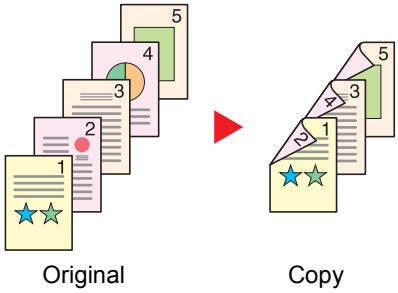

Produces two-sided copies from one-sided originals. In case of an odd number of originals, the back side of the last copy will be blank.

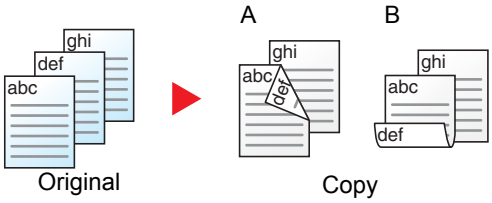

The following binding options are available.

A Original Left/Right to Binding Left/Right: Images on the second sides are not rotated.

B Original Left/Right to Binding Top: Images on the second sides are rotated 180 degrees. Copies can be bound on the top edge, facing the same orientation when turning the pages.

Two-sided to One-sided

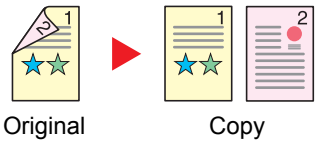

Copies each side of a two-sided original onto two individual sheets.

The following binding options are available.

- Binding Left/Right: Images on the second sides are not rotated.
- Binding Top: Images on the second sides are rotated 180 degrees.

Two-sided to Two-sided

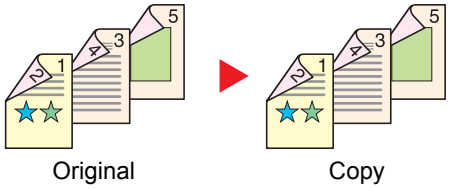

Produces two-sided copies from two-sided originals.

NOTE

The paper sizes supported in Two-sided to Two-sided mode are A4, B5, A5, Legal, Letter, Executive, Statement, Oficio II, 216 × 340 mm, Folio, ISO B5, and 16K.

Copying

Prints 1-sided originals to 2-sided, or 2-sided originals to 1-sided. Select the binding orientation for original and finished documents.

Item		Value	Description
1-sided>>1-sided		—	Disables the function.
1-sided>>2-sided		—	Copy the original with the default setting. For the default settings, refer to the following: ➡ Function Defaults (page 8-16)
2-sided>>1-sided		—	
2-sided>>2-sided		—	
Others	**Duplex**	1-sided>>1-sided, 1-sided>>2-sided, 2-sided>>1-sided, 2-sided>>2-sided	Select the desired duplex option.
	Binding in Original[*1]	Left/Right, Top	Select the binding orientation of originals.
	Binding in Finishing[*2]	Left/Right, Top	Select the binding orientation of copies.
	Original Orientation	Top Edge on Top, Top Edge on Left	Select the orientation of the original document top edge to scan correct direction.

*1 Displayed when [**2-sided>>1-sided**] or [**2-sided>>2-sided**] is selected for "Duplex".
*2 Displayed when [**1-sided>>2-sided**] or [**2-sided>>2-sided**] is selected for "Duplex".

When placing the original on the platen, consecutively replace each original and press the [**Start**] key.

After scanning all originals, select [**Finish Scan**] to start copying.

Printing

Print a document on both sides of the paper.

Item		Description
1-sided		Disables the function.
	**2-sided**	Prints a 2-sided document so that the sheets are aligned properly for binding on the left or right.
	**2-sided**	Prints a 2-sided document so that the sheets are aligned properly for binding on the top.

Continuous Scan

Copy Send Scan to USB

Scans a large number of originals in separate batches and then produce as one job.

Originals will be scanned continuously until you select [**Finish Scan**].

(**Value**: [**Off**] / [**On**])

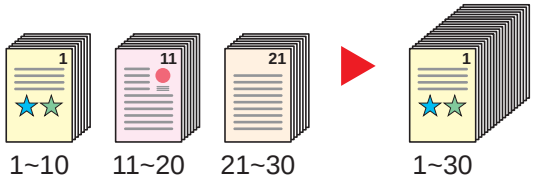

Job Finish Notice



Sends E-mail notice when a job is complete.

Users can be notified of the completion of a job while working at a remote desk, saving the time spent waiting beside the machine to finish.

NOTE

PC should be configured in advance so that E-mail can be used.

Command Center RX (page 2-46)

E-mail can be sent to a single destination.

Item	Description
Off	Disables the function.
On	Displays the destination list.
	Add a Destination To add a new destination, select [**Menu**] > [**Add**]. • **Address Book**: Select the notification destination from the address book and select [**OK**]. • **Ext. Address Book***1: Select the notification destination from the external address book. • **Address Entry**: Enter the e-mail address directly. Enter the address (up to 128 characters) and select [**OK**]. • **My Address***2: Uses the e-mail address of the logged in user.
	Check the Destination To display details for the destinations, select [ ].
	Delete the Destination To delete the selected destination, select [ ].

*1 For details on the External Address Book, refer to the following:
Command Center RX User Guide

*2 Displayed when user login administration is enabled.

File Name Entry



Adds a file name.

Additional information such as job number and date and time can also be set. You can check a job history or job status using the file name, date and time, or job number specified here.

Enter the file name (up to 32 characters), and select [**Next**].

To add date and time, select [**Date and Time**]. To add job number, select [**Job No.**]. To add both, select [**Job No. & Date and Time**] or [**Date and Time & Job No.**].

Priority Override

Copy Print from Box Print from USB

Suspends the current job and gives a new job top priority.

The suspended job resumes after the other job is finished.

(**Value**: [**Off**] / [**On**])

NOTE

- This function is not available if current job was an override.
- Priority override may not be available depending on the status of the current print job and memory usage.

Quiet Mode

Copy Print from Box Print from USB Send Scan to USB

Lower print and scan speed for quiet processing.

Select this mode when the running noise is uncomfortable.

It is possible to set the use of Quiet Mode for each function, such as copying and sending.

(**Value**: [**Off**] / [**On**])

NOTE

- The processing speed will be slower than normal when in Quiet Mode.
- This cannot be used when [**Prohibit**] is set for "Specify for Each Job".

Specify for Each Job (page 8-42)

Skip Blank Page

Copy Send Scan to USB

When there are blank pages in a scanned document, this function skips the blank pages and prints only pages that are not blank.

When set to [**High**], the level at which blank paper is recognized is higher.

The machine detects blank pages, saving unnecessary printing without the need to check for blank pages in the document.

Select [**Low**], [**Middle**] or [**High**] in [**On**].

NOTE

The originals with punched holes or originals printed on a colored substrate may not be recognized as blank pages.

Duplex (2-sided Original)

Send Scan to USB

Select the type and orientation of the binding based on the original.

Item		Value	Description
1-sided		—	Disables the function.
2-sided		—	Set when using a 2-sided sheet original that will be bound on the left or right.
Others	**Duplex**	1-sided, 2-sided (Binding Left/Right), 2-sided (Binding Top)	Select the binding orientation of originals.
	Original Orientation[*1]	Top Edge on Top, Top Edge on Left	Select the orientation of the original document top edge to scan correct direction.

*1 Displayed when [**2-sided (Binding Left/Right)**] or [**2-sided (Binding Top)**] is selected in "Duplex".

Sample image

Value		Image
2-sided	**Binding Left/ Right**	
	Binding Top	

Sending Size

Send

Select size of image to be sent.

Select [**Same as Original Size**], [**Metric**], [**Inch**], or [**Others**] to select the sending size.

Item	Value	Description
Same as Original Size	—	Automatically sends the same size as the original.
Metric	A4, A5, A6, B5, B6, Folio, 216 × 340 mm	Select from the Metric standard sizes.
Inch	Letter, Legal, Statement, Executive, Oficio II	Select from the Inch series standard sizes.
Others	16K, ISO B5, Envelope #10, Envelope #9, Envelope #6, Envelope Monarch, Envelope DL, Envelope C5, Hagaki (Cardstock), Oufukuhagaki (Return postcard), Youkei 4, Youkei 2	Select from special standard sizes and custom sizes.

Relationship between Original Size, Sending Size, and Zoom

Original Size (page 6-9), Sending Size, and Zoom (page 6-23) are related to each other. For details, see the table below.

Original size and sending size are	the same	different
Original Size (page 6-9)	Specify as necessary.	Specify as necessary.
Sending Size	Select [**Same as Original Size**].	Select the desired size.
Zoom (page 6-23)	Select [**100%**] (or [**Auto**]).	Select [**Auto**].

NOTE

When you specify the sending size that is different from the original size, and select the zoom of [**100%**], you can send the image as the actual size (No Zoom).

File Format

Send Scan to USB

Specify the image file format. Image quality level can also be adjusted.

Select the file format from [**PDF**], [**TIFF**], [**JPEG**], [**XPS**], [**OpenXPS**], and [**High Comp. PDF**].

When the color mode in scanning has been selected for Grayscale or Full Color, set the image quality.

If you selected [**PDF**] or [**High Comp. PDF**], you can specify encryption or PDF/A settings.

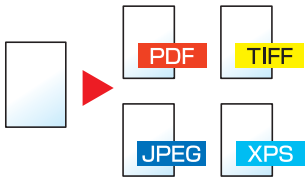

Item		Value	Description
PDF		—	Set the file format selected. The image quality and PDF/A settings will be the default settings. For the default settings, refer to the following: Function Defaults (page 8-16)
High Comp. PDF		—	
TIFF		—	
JPEG		—	
XPS		—	
OpenXPS		—	
Others	**File Format**	PDF, High Comp. PDF, TIFF, JPEG, XPS, OpenXPS	Select the image file format.
	Image Quality[*1]	Compression Ratio Priority, Standard, Quality Priority	Set the quality level for High Compression PDF.
	Image Quality[*2]	1 Low (High Comp.) to 5 High (Low Comp.)	Set the image quality.
	PDF/A[*3]	Off, PDF/A-1a, PDF/A-1b	Set PDF/A-1 format type.
	Encryption[*3]	—	You can use PDF encryption functions. PDF Encryption Functions (page 6-34)

*1 Displayed when [**High Comp. PDF**] is selected for "File Format".
*2 Displayed when something other than [**High Comp. PDF**] is selected for "File Format".
*3 Displayed when [**PDF**] or [**High Comp. PDF**] is selected for "File Format".

NOTE

If encryption is enabled, PDF/A settings cannot be specified.

PDF Encryption Functions

If you have selected PDF or High Comp. PDF for file format, you can restrict the access level for displaying, printing, and editing PDF's by assigning a secure password.

Select [**Others**], [**PDF**] or [**High Comp. PDF**] in [**File Format**], and select [**Encryption**].

Items that can be set vary depending on the setting selected in [**Compatibility**].

When [Acrobat 3.0 and later, Encryption Level: Middle(40-bit)] is selected

Item	Value	Description
Password to Open Document	Off, On	Enter the password to open the PDF file. Select [**On**], enter a password (up to 256 characters) and then select [**Next**]. Enter the password again for confirmation, and select [**OK**].
Password to Edit/Print Document	Off, On	Enter the password to edit the PDF file. Select [**On**], enter a password (up to 256 characters) and then select [**Next**]. Enter the password again for confirmation, and select [**OK**]. When you have entered the password to edit/print document, you can specifically limit the operation.
Printing Allowed	Not Allowed, Allowed	Restricts printing of the PDF file.
Changes Allowed	Not Allowed	Disables the change to the PDF file.
	Commenting	Can only add commenting.
	Page Layout except extracting Pages	Can change the page layout except extracting the pages of the PDF file.
	Any except extracting Pages	Can conduct all operations except extracting the pages of the PDF file.
Copying of Text/Images/ Others	Disable, Enable	Restricts the copying of text and objects on the PDF file.

When [Acrobat 5.0 and later, Encryption Level: High(128-bit)] is selected

Item		Value	Description
Password to Open Document		Off, On	Enter the password to open the PDF file. Select [**On**], enter a password (up to 256 characters) and then select [**Next**]. Enter the password again for confirmation, and select [**OK**].
Password to Edit/Print Document		Off, On	Enter the password to edit the PDF file. Select [**On**], enter a password (up to 256 characters) and then select [**Next**]. Enter the password again for confirmation, and select [**OK**]. When you have entered the password to edit/print document, you can specifically limit the operation.
	Printing Allowed	Not Allowed	Disables the printing of PDF file.
		Allowed (Low Resolution only)	Can print the PDF file only in low resolution.
		Allowed	Can print the PDF file in original resolution.
	Changes Allowed	Not Allowed	Disables the change to the PDF file.
		Inserting/Deleting/Rotating Pages	Can only insert, delete, and rotate the pages of the PDF file.
		Commenting	Can only add commenting.
		Any except extracting Pages	Can conduct all operations except extracting the pages of the PDF file.
	Copying of Text/Images/ Others	Disable, Enable	Restricts the copying of text and objects on the PDF file.

File Separation

Send Scan to USB

Creates several files by dividing scanned original data page by page, and sends the files.

(**Value**: [**Off**] / [**Each Page**])

Select [**Each Page**] to set File Separation.

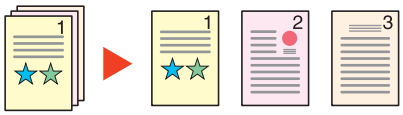

NOTE

A three-digit serial number such as "abc_001.pdf, abc_002.pdf..." is attached to the end of the file name.

Scan Resolution

Send Scan to USB

Select fineness of scanning resolution.

(**Value**: [**600 × 600dpi**] / [**400 × 400dpi Ultra**] / [**300 × 300dpi**] / [**200 × 400dpi Super**] / [**200 × 200dpi Fine**] / [**200 × 100dpi Normal**])

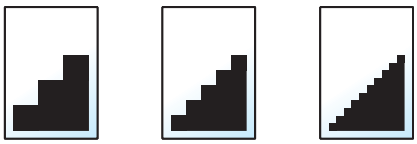

NOTE

The larger the number, the better the image resolution. However, better resolution also means larger file sizes and longer send times.

E-mail Subject/Body

Send

Adds subject and body when sending a document.

Select [**Subject**] / [**Body**] to enter the E-mail subject/body.

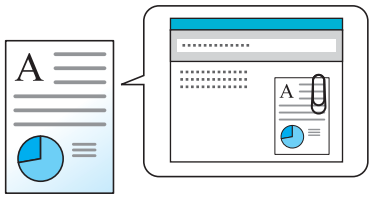

NOTE

The subject can include up to 60 characters, and the body can include up to 500 characters.

FTP Encrypted TX

Send

Encrypts images when sending via FTP.

Encryption secures the document transmission.

(**Value**: [**Off**] / [**On**])

NOTE

Click [**Security Settings**], and then [**Network Security**] in the Command Center RX. Be sure that "SSL" of Secure Protocol Settings is "On" and one or more effective encryption are selected in Client side settings.

Command Center RX User Guide

Delete after Print

Print from Box

Automatically deletes a document from the box once printing is complete.

(**Value**: [**Off**] / [**On**])

Storing Size

Scan to USB

Select size of image to be stored.

Select [**Same as Original Size**], [**Metric**], [**Inch**], or [**Others**] to select the storing size.

Item	Value	Description
Same as Original Size	—	Store an image the same size as the original.
Metric	A4, A5, A6, B5, B6, Folio, 216 × 340 mm	Select from the Metric standard sizes.
Inch	Letter, Legal, Statement, Executive, Oficio II	Select from the Inch series standard sizes.
Others	16K, ISO B5, Envelope #10, Envelope #9, Envelope #6, Envelope Monarch, Envelope DL, Envelope C5, Hagaki (Cardstock), Oufukuhagaki (Return postcard), Youkei 4, Youkei 2	Select from special standard sizes and custom sizes.

Relationship between Original Size, Storing Size, and Zoom

Original Size (page 6-9), Storing Size, and Zoom (page 6-23) are related to each other. For details, see the table below.

Original Size and the size you wish to store as are	the same	different
Original Size (page 6-9)	Specify as necessary.	Specify as necessary.
Storing Size	Select [**Same as Original Size**].	Select the desired size.
Zoom (page 6-23)	Select [**100%**] (or [**Auto**]).	Select [**Auto**].

NOTE

When you select Storing Size that is different from Original Size, and select the Zoom [**100%**], you can store the image as the actual size (No Zoom).

Encrypted PDF Password

Print from USB

Enter the preassigned password to print the PDF data.

Enter the Password, and select [**OK**].

NOTE

For details on entering the password, refer to the following:

Character Entry Method (page 11-8)

JPEG/TIFF Print

Print from USB

Select the image size when printing JPEG or TIFF files.

(**Value**: [**Paper Size**] / [**Image Resolution**] / [**Print Resolution**])

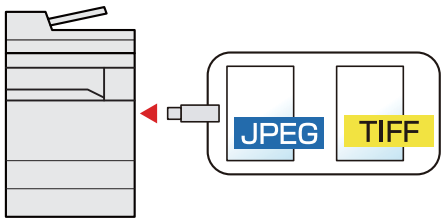

Item	Description
Paper Size	Fits the image size to the selected paper size.
Image Resolution	Prints at resolution of the actual image.
Print Resolution	Fits the image size to the print resolution.

XPS Fit to Page

Print from USB

Reduces or enlarges the image size to fit to the selected paper size when printing XPS file.

(**Value**: [**Off**] / [**On**])

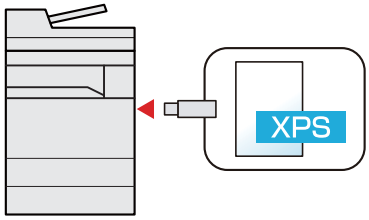

7 Status/Job Cancel

This chapter explains the following topics:

Checking Job Status 7-2
Details of the Status Screens 7-3
Checking Detailed Information of Jobs 7-7
Checking Job History 7-8
Checking the Detailed Information of Histories 7-9
Sending the Log History 7-9
Job Operation 7-10
Pause and Resumption of Jobs 7-10
Canceling of Jobs 7-10
Device/Communication 7-11
Checking the Remaining Amount of Toner and Paper (Paper/Supplies) 7-12

Checking Job Status

Check the status of jobs being processed or waiting to be printed.

Available Status Screens

The processing and waiting statuses of jobs are displayed as a list on the touch panel in four different screens - Printing Jobs, Sending Jobs, Storing Jobs, and Scheduled Jobs.

The following job statuses are available.

Status Display	Job status to be displayed
Print Job Status	• Copy • Printer • FAX reception • E-mail reception • Printing from Document Box • Printing data from removable memory • Application • Job Report/List
Send Job Status	• FAX transmission • E-mail • Folder transmission • Application • Multiple destination
Store Job Status	• Scan • FAX • Printer
Scheduled Job	• Sending Job FAX using Delayed transmission

Displaying Status Screens

1 Display the screen.

Select the [**Status/Job Cancel**] key.

2 Select the job you want to check.

Select either of [**Print Job Status**], [**Send Job Status**], [**Store Job Status**] or [**Scheduled Job**] to check the status.

➡ Print Job Status Screen (page 7-3)
Send Job Status Screen (page 7-4)
Store Job Status Screen (page 7-5)
Scheduled Job Status Screen (page 7-6)

Details of the Status Screens

NOTE

You can show the job statuses of all users, or only the statuses of your own jobs.

Display Status/Log (page 8-21)

This setting can also be changed from Command Center RX.

Command Center RX User Guide

Print Job Status Screen

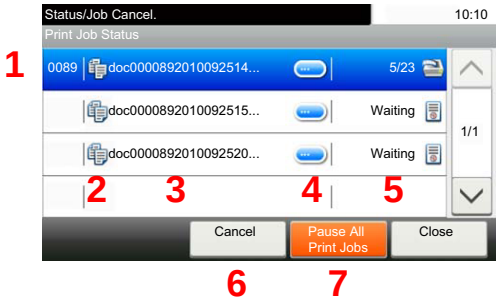

No.	Item	Description
1	Job No.	Acceptance No. of job
2	Type	Icons that indicate the job type Copy job Printer job Job from Document Box FAX reception E-mail reception Data from removable memory Application Report/List
3	Job Name	Job Name or file name
4	[ ]	Select this key for the job for which you wish to display detailed information. Checking Detailed Information of Jobs (page 7-7)
5	Status	Status of job (Number of copies printed)/(Total number of copies to be printed): Printing Processing: The status before starting to print. Waiting: Print Waiting Pause: Pausing print job or error Canceling: Canceling the job
6	[**Cancel**]	Select the job you want to cancel from the list, and select this key.
7	[**Pause All Print Jobs**]	Pauses all the printing jobs. By selecting this key again, the printing jobs will be resumed.

Send Job Status Screen

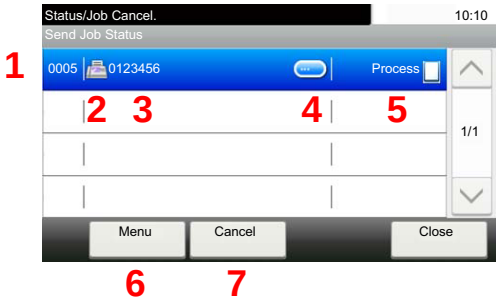

No.	Item	Description
1	Job No.	Acceptance No. of job
2	Type	Icons that indicate the job type Sending Job FAX Sending Job E-mail Sending Job Folder (SMB/FTP) Sending Job Application Multi Sending
3	Job Name	Job Name or file name
4	[ ]	Select this key for the job for which you wish to display detailed information. Checking Detailed Information of Jobs (page 7-7)
5	Status	Status of job Processing: The status before starting sending such as during scanning originals Sending: Sending Waiting: Waiting Sending Canceling: Canceling the job Pause: Pausing the job
6	[**Menu**]	Selecting this key displays [**Priority Override**]. This function allows you to give a particular fax job priority. Select the fax job you wish to send immediately > [**Menu**] > [**Priority Override**]
7	[**Cancel**]	Select the job you want to cancel from the list, and select this key.

Store Job Status Screen

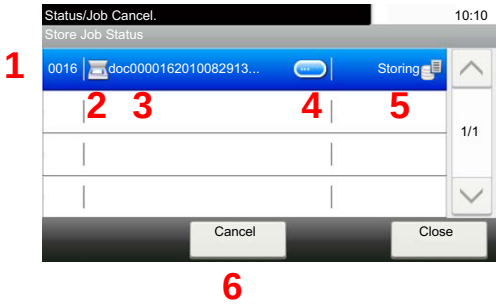

No.	Item	Description
1	Job No.	Acceptance No. of job
2	Type	Icons that indicate the job type Storing Job Scan Storing Job Printer Storing Job FAX
3	Job Name	Job name or file name is displayed.
4	[ ]	Select this key for the job for which you wish to display detailed information. Checking Detailed Information of Jobs (page 7-7)
5	Status	Status of job Processing: The status before starting to save such as during scanning originals Storing: Storing Data Canceling: Canceling the job Pause: Pausing the job
6	**[Cancel]**	Select the job you want to cancel from the list, and select this key.

Scheduled Job Status Screen

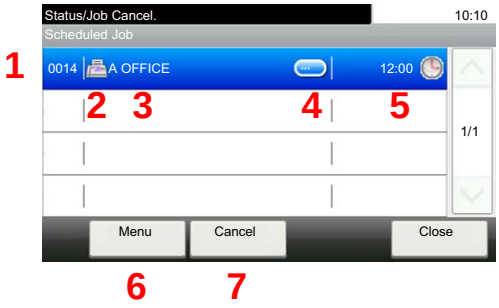

No.	Item	Description
1	Job No.	Acceptance No. of job
2	Type	Icons that indicate the job type Storing Job FAX
3	Destination	Destination (Either destination name, FAX number, or No. of broadcast items)
4	[ ]	Select this key for the job for which you wish to display detailed information. Checking Detailed Information of Jobs (page 7-7)
5	Start Time	Time to start the scheduled job
6	**[Menu]**	Selecting this key displays **[Start Now]**. Select the job you wish to send immediately > **[Menu]** > **[Start Now]**
7	**[Cancel]**	Select the job you want to cancel from the list, and select this key.

Checking Detailed Information of Jobs

Check the detailed information of each job.

NOTE

When you have logged in as a user, you can only check your own jobs. When you have logged in as administrator, you can check all jobs.

1 Display the screen.

Details of the Status Screens (page 7-3)

2 Check the information.

1 Select [...] for the job for which you wish to display detailed information.

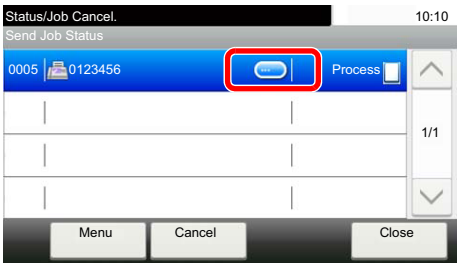

Detailed information of the selected job is displayed.

Use [∨] or [∧] to see the next or previous page of information. More detailed information can be checked if a white item is selected.

In Sending Jobs, you can check the destination by selecting [**Status/Destination**].

2 To exit from the detailed information, select [**End**].

Checking Job History

Check the history of completed jobs.

NOTE

- Job history is also available by Command Center RX or KYOCERA Net Viewer from the computer.

Command Center RX User Guide

KYOCERA Net Viewer User Guide

- You can show the job log of all users, or only your own job log.

Display Status/Log (page 8-21)

- This setting can also be changed from Command Center RX.

Command Center RX User Guide

Available Job History Screens

The job histories are displayed separately in four screens - Printing Jobs, Sending Jobs, Storing Jobs, and FAX Jobs. The following job histories are available.

Screen	Job histories to be displayed
Print Job Log	• Copy • Printer • FAX reception • E-mail reception • Printing from Document Box • Job Report/List • Printing data from removable memory • Application
Send Job Log	• FAX • E-mail • Folder • Application • Multiple destination
Store Job Log	• Scan • FAX • Printer
FAX Job Log	**FAX System 11 Operation Guide**

Displaying Job History Screen

1 Display the screen.

Select the [**Status/Job Cancel**] key.

2 Select the job you want to check.

Checking the Detailed Information of Histories

Check the detailed information of each history.

1 Display the screen.

2 Check the information.

1 Select [ ] for the job for which you wish to check details.

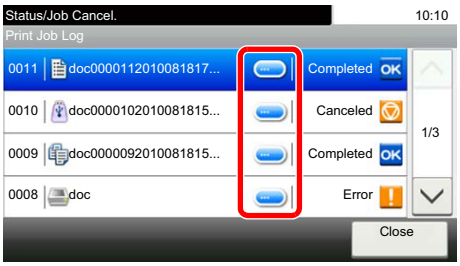

Detailed information of the selected job is displayed.

NOTE

To check the information of the next/previous page, select [∨] or [∧].

2 To exit from the detailed information, select [**Close**].

Sending the Log History

You can send the log history by E-mail. You can either send it manually as needed or have it sent automatically whenever a set number of jobs is reached.

Sending Log History (page 8-7)

Job Operation

Pause and Resumption of Jobs

Pause/resume all printing jobs in printing/waiting.

1 Display the screen.

Select the [**Status/Job Cancel**] key.

2 Select [Pause All Print Jobs] on the printing jobs status screen.

Printing is paused.

When resuming the printing of jobs that have been paused, select [**Resume All Print Jobs**].

Canceling of Jobs

A job in printing/waiting status can be canceled.

1 Display the screen.

Select the [**Status/Job Cancel**] key.

2 Select the job to be canceled from the list, and select [Cancel].

3 Select [Yes] in the confirmation screen.

Device/Communication

Configure the devices/lines installed or connected to this machine or check their status.

1 Display the screen.

1 Select the [**Status/Job Cancel**] key.

2 Select the device you wish to check.

The screen to check the status or configure the devices is displayed.

2 Check the status.

The items you can check are described below.

"Scanner"

The status of an original scanning or the error information (paper jam, opened cover, etc.) is displayed.

"Printer"

Error information such as paper jam, out of toner, or out of paper, and status such as waiting or printing are displayed.

"FAX"

- The information such as sending/receiving and dialing is displayed.
- Select [**Line Off**] to cancel a fax in sending/receiving.

FAX System 11 Operation Guide

"Removable Memory (USB Memory)"

- The usage, capacity and free space of the external media connected to this machine are displayed.
- Select [**Menu**] > [**Format**] to format external media.

IMPORTANT

When [Format] is selected, all data in the external media is erased.

- Select [**Remove**] to safely remove the external media.

"USB Keyboard"

The status of the optional USB Keyboard is displayed.

"Network Connection Status"

The network connection status appears.

"Option Network Connection Status"

The connection status of an optional network interface kit appears.

"Wireless Network"

The connection status of the Wireless Network Interface Kit is displayed.

"SSD"

The status of the optional SSD is displayed.

Checking the Remaining Amount of Toner and Paper (Paper/Supplies)

Check the remaining amount of toner, and paper on the touch panel.

1 Display the screen.

1 Select the [**Status/Job Cancel**] key.

2 Select the device you wish to check.

2 Check the status.

The items you can check are described below.

"Toner Status"

The amount of toner remaining is shown in levels. And you can check the status of waste toner box.

"Paper Status"

You can check the size, orientation, type, and remaining amount of paper in each paper source. The amount of paper remaining is shown in levels.

"Staple"

You can check the status of staples

8 Setup and Registration (System Menu)

This chapter explains the following topics:

System Menu 8-2
Operation Method 8-2
System Menu Settings 8-3
Language 8-5
Report 8-5
User Property 8-7
Cassette/MP Tray Settings 8-8
Common Settings 8-10
Home 8-22
Copy 8-22
Send 8-23
Document Box 8-24
FAX 8-24
Application 8-24
Internet 8-25
Address Book/One Touch 8-25
User Login/Job Accounting 8-26
Printer 8-26
System/Network 8-29
Date/Timer/Energy Saver 8-40
Adjustment/Maintenance 8-42

System Menu

Configure settings related to overall machine operation.

Operation Method

System Menu is operated as follows:

1 Display the screen.

Select the [**System Menu/Counter**] key.

2 Select a function.

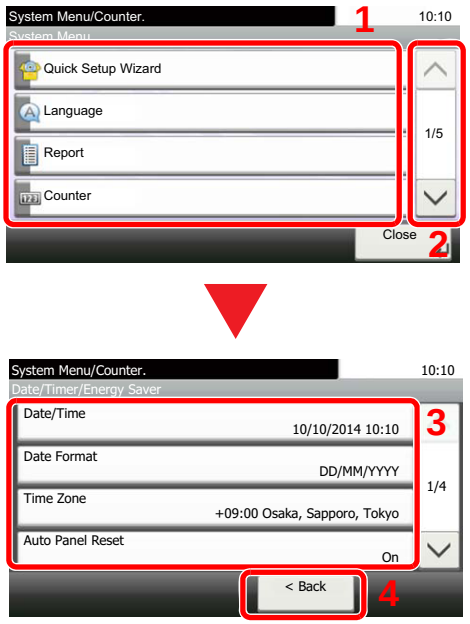

1 Displays the System Menu items.

2 Scrolls up and down when the list of values cannot be displayed in its entirety on a single screen.

3 Displays setting items.
Select the key of a function to display the setting screen.

4 Returns to the previous screen.

3 Configure the settings.

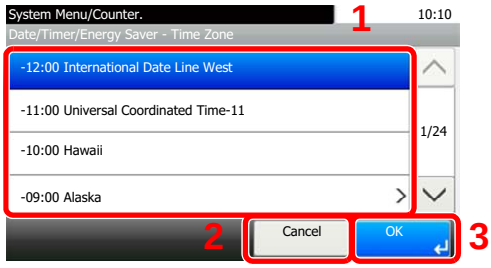

1 Selecting a value it to be accepted.

2 Returns to the original screen without making any changes.

3 Accepts the settings and exits.

NOTE

- In order to change settings that require administer privileges, you must log in with administrator privileges.
  The factory default login user name and login password are set as shown below.

  Login User Name: **3000**

  Login Password: **3000**

- If function default settings have been changed, the [**Reset**] key can be selected in each function screen to immediately change the settings.

Refer to System Menu Settings on the following page and configure as needed.

System Menu Settings

This section explains the functions that can be configured in System Menu. To configure the settings, select the item in System Menu and select the setting item. For details on each function, see the table below.

Item	Description	Reference Page
Quick Setup Wizard	The Quick Setup Wizard configures Fax, Network and Energy Saver settings.	page 2-28
Language	Select the language displayed on the touch panel.	page 8-5
Print Report	Configure settings for printing reports and histories.	page 8-5
Admin Report Settings		Refer to the **FAX System 11 Operation Guide**.
Result Report Settings		page 8-6
Sending Log History		page 8-7
Counter	This counts the number of pages printed or scanned.	page 2-43
User Property	Allows you to view information about logged in users and edit some of that information.	page 8-7
Cassette 1 (to 4)	Select type of paper in Cassette 1 (to 4).	page 8-8
Multi Purpose Tray	Select type of paper in multi purpose tray.	page 8-9
Default Screen	Select the screen appearing right after start-up (default screen).	page 8-10
Sound	Set options for buzzer sound during the machine operations.	page 8-10
Original Settings	Configures settings for originals.	page 8-11
Paper Settings	Configures settings for paper.	page 8-13
Function Defaults	Defaults are the values automatically set after the warm-up is completed or the [**Reset**] key is selected. Set the defaults for available settings such as copying and sending. Setting the frequently-used values as defaults makes subsequent jobs easier.	page 8-16
Preset Limit	Restrict the number of copies that can be made at one time.	page 8-18
Error Handling	Select whether to cancel or continue the job when error has occurred.	page 8-19
Paper Output	Select the output tray respectively for copy jobs, print jobs from Document Box, computers, and FAX RX data.	page 8-18
Color Toner Empty Action	Select whether printing is prohibited or the Print in Black and White setting is used for printing once the color toner runs out.	page 8-19
Measurement	Select inch or metric for the unit for paper dimensions.	page 8-20
Low Toner Alert Level	Set the amount of remaining toner to notify the administrator when to order a toner when the toner is running low.	page 8-20
Keyboard Layout	Change the layout of the touch panel keyboard used to enter characters.	page 8-20
USB Keyboard Type	Select the type of USB keyboard that you want to use.	page 8-20
Offset Documents by Job	Select whether to offset documents by Job.	page 8-20
Offset One Page Documents	Set whether one-page documents are sorted.	page 8-21
Format SSD	Format an optional SSD.	page 8-21
Format SD Card	Format an optional SD/SDHC memory card.	page 8-21
Display Status/Log	Set the display method of the Status/Log.	page 8-21
Function Key Usage	Configure settings for function key on the operation panel.	page 8-22

Item	Description	Reference Page
Home	Configure settings for Home screen.	page 8-22
Copy	Configures settings for copying functions.	page 8-22
Send	Configures settings for sending functions.	page 8-23
Document Box	Configures settings related to the Custom Box, Job Box, Sub Address Box and Polling Box.	page 8-24
FAX	Configures settings for fax functions. ➡ **FAX System 11 Operation Guide**	—
Application	Configure settings for Application.	page 8-24
Internet	Set the proxy for connection to the Internet from an application.	page 8-25
Address Book/One Touch	Configures Address Book and One Touch Key settings. Address Book: ➡ Adding a Destination (Address Book) (page 3-22) One Touch Key: ➡ Adding a Destination on One Touch Key (One Touch Key) (page 3-27)	page 8-25
User Login/Job Accounting	Configures settings related to machine management. User Login: ➡ Overview of User Login Administration (page 9-2) Job Accounting: ➡ Overview of Job Accounting (page 9-31)	—
Printer	Printing from computers, settings are generally made on the application software screen. However, the following settings are available for configuring the defaults to customize the machine.	page 8-26
Network	Configures network settings.	page 8-29
Optional Network	Configure settings for the optional network interface kit.	page 8-35
Wireless Network	Configure settings for the optional Wireless Network Interface Kit.	page 8-35
Network Interface (Send)	Specify the network interface card to be used for the send function, the network authentication and connecting to external address book.	page 8-36
Interface Block Setting	This allows you to protect this machine by blocking the interface with external devices such as USB hosts or optional interfaces.	page 8-37
Security Level	The Security Level setting is primarily a menu option used by service personnel for maintenance work. There is no need for customers to use this menu.	—
Restart	Restart the CPU without turning the power switch off. Use this to deal with any unstable operation by the machine. (Same as the computer restart.)	page 8-37
RAM Disk Setting	A RAM disk can be created and its size can be set.	page 8-38
Optional Memory	When optional memory is installed, select the memory allocation scheme based on the application in which you are using the equipment.	page 8-38
Data Security	Configure settings for data stored in the optional SSD and machine's memory.	page 8-39
Optional Function	You can use the optional applications installed on this machine.	page 8-39
Date/Timer/Energy Saver	Configures settings related to the date and time.	page 8-40
Adjustment/Maintenance	Adjust printing quality and conduct machine maintenance.	page 8-42

Language

[**System Menu/Counter**] key > [**Language**]

Item	Description
Language	Select the language displayed on the touch panel.

Report

Print reports to check the machine settings and status.

Default settings for printing the result reports can also be configured.

Report Print

[**System Menu/Counter**] key > [**Report**] > [**Report Print**]

Item	Description
Status Page	Prints the status page, allowing you to check the information including current settings, available memory space, and optional equipment installed. 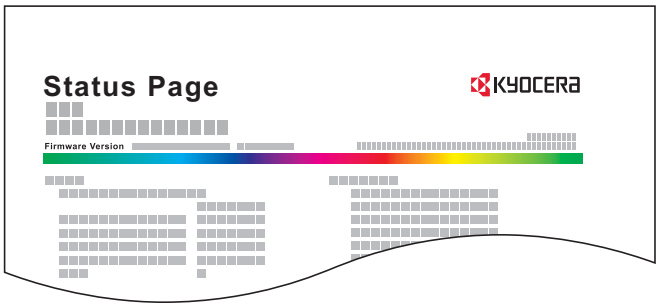
Font List	Prints the font list, allowing you to check the font samples installed in the machine. 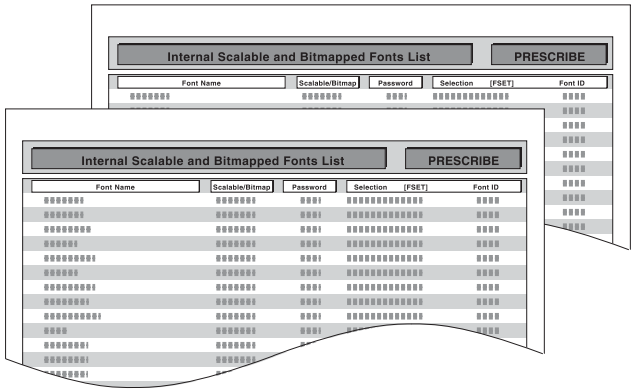
Network Status	Prints the network status, allowing you to check the information including network interface firmware version, network address and protocol. 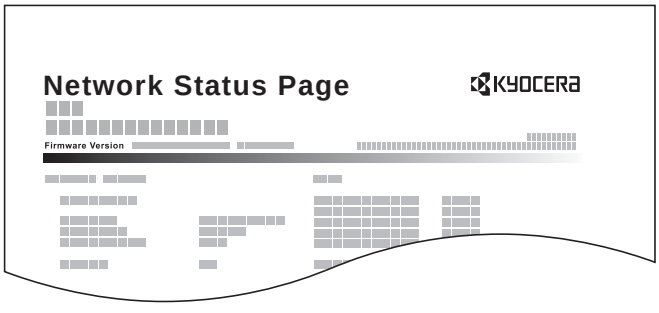

Item	Description
Service Status	Prints the service status. More detailed information is available than on the Status Page. Service personnel usually print the service status pages for maintenance purpose.
Accounting Report	Prints the accounting report, allowing you to check the accounts that have been registered on the machine.
Sub Address Box List **FAX List (Index)** **FAX List (No.)** **Outgoing FAX Report** **Incoming FAX Report**	Prints the report on the FAX function. ➔ **FAX System 11 Operation Guide** **NOTE** FAX functions are available only on products with the fax function installed.
Optional Network Status	Prints the optional network status, allowing you to check the information including optional network interface firmware version, network address and protocol. **NOTE** This function is displayed when the optional network interface kit or Wireless Network Interface Kit is installed.

Admin Report Settings

[**System Menu/Counter**] key > [**Report**] > [**Admin Report Settings**]

Configure settings for fax functions.

➔ **FAX System 11 Operation Guide**

Result Report Settings

[**System Menu/Counter**] key > [**Report**] > [**Result Report Settings**]

Item		Description
Send Result Report		Automatically print a report of transmission result when a transmission is complete.
	E-mail/Folder	Automatically print a report of transmission result when E-mail or SMB/FTP transmission is complete. **Value: Off, On, Error Only**
	FAX*1	➔ **FAX System 11 Operation Guide**
	Canceled before Sending*2	Print a send result report if the job is canceled before being sent. **Value: Off, On**
	Recipient Format*2	Select the Recipient Format for the send result report. **Value: Name or Destination, Name and Destination**
RX Result Report*1		➔ **FAX System 11 Operation Guide**
Job Finish Notice Setting		Attaches sent images to job finish notices. **Value: Do Not Attach Image, Attach Image**

*1 Displayed only when the optional FAX Kit is installed.
*2 When "E-mail/Folder" and "FAX" are set to [**Off**], this function will not be displayed.

Sending Log History

[**System Menu/Counter**] key > [**Report**] > [**Sending Log History**]

Item	Description
Sending Log History	You can also send the log history to the specified destinations manually.
Auto Sending	This function automatically sends the log history to the specified destinations whenever a set number of jobs has been logged. **Value: Off, On** **NOTE** If [**On**] is selected, specify the number of job histories. The setting range is 1 to 16.
Destination	Set the destination to which log histories are sent. Only E-mail address can be set.
Job Log Subject	Set the subject automatically entered when sending log histories by E-mail. **Value: Up to 60 characters**
Personal Information	Select whether to include personal information in the job log. **Value: Include, Exclude**

User Property

[**System Menu/Counter**] key > [**User Property**]

Allows you to view information about logged in users and edit some of that information.

Enabling User Login Administration (page 9-3)

Cassette/MP Tray Settings

Select paper size and media type for Cassettes and multi purpose tray.

Cassette 1 (to 4)

[**System Menu/Counter**] key > [**Cassette/MP Tray Settings**] > [**Cassette 1 (to 4)**]

Select paper size and media type for Cassettes 1 to 4.

Selection Item		Selectable Size/Type
Paper Size	**Auto**	Paper size is automatically detected and selected. **Values: Metric, Inch**
	Metric	Select from the Metric standard sizes. **Values: A4*1, A5*1, A6*1, B5*1, B6*1, Folio*1, 216 × 340 mm**
	Inch	Select from the Inch series standard sizes. **Values: Letter*1, Legal*1, Statement*1, Executive, Oficio II**
	Other	Select from special standard sizes and custom sizes. **Values: 16K, ISO B5, Envelope #10, Envelope #9, Envelope #6, Envelope Monarch, Envelope DL, Envelope C5, Youkei 4, Youkei 2, Custom*2**
Media type*3		Select the media type. **Values: Plain (60 - 105 g/m^2), Rough, Vellum (60 - 105 g/m^2), Recycled, Preprinted*4, Bond, Color, Prepunched*4, Letterhead*4, Envelope, Thick (106 - 163 g/m^2), High Quality, Custom 1 - 8**

*1 Paper size is automatically detected in the cassette.

*2 The custom paper sizes are set for each cassette.

➡ Custom Paper Size (page 8-13)

*3 To change to a media type other than "Plain".

➡ Media Type Setting (page 8-15)

When a paper weight that cannot be loaded in the cassette is set for a media type, that media type does not appear.

*4 To print on preprinted or prepunched paper or on letterhead.

➡ Special Paper Action (page 8-14)

Multi Purpose Tray

[**System Menu/Counter**] key > [**Cassette/MP Tray Settings**] > [**Multi Purpose Tray**]

Select paper size and media type for the multi purpose tray.

Item		Description
Paper Size	**Metric**	Select from the Metric standard sizes. **Values: A4, A5, A6, B5, B6, Folio, 216 × 340 mm**
	Inch	Select from the Inch series standard sizes. **Values: Letter, Legal, Statement, Executive, Oficio II**
	Other	Select from special standard sizes and custom sizes. **Values: 16K, ISO B5, Envelope #10, Envelope #9, Envelope #6, Envelope Monarch, Envelope DL, Envelope C5, Hagaki (Cardstock), Oufuku hagaki (Return postcard), Youkei 4, Youkei 2, Custom*1**
Media Type*2		Select the media type. **Values: Plain (60 to 105 g/m^2), Rough, Transparency, Vellum (60 to 105 g/m^2), Labels, Recycled, Preprinted*3, Bond, Cardstock, Color, Prepunched*3, Letterhead*3, Envelope, Thick (106 to 220 g/m^2), Coated, High Quality, Custom 1-8**

*1 For instructions on how to specify the custom paper size.
➡ Custom Paper Size (page 8-13)

*2 To change to a media type other than "Plain".
➡ Media Type Setting (page 8-15)

*3 To print on preprinted or prepunched paper or on letterhead.
➡ Special Paper Action (page 8-14)

Common Settings

Configures overall machine operation.

Default Screen

[**System Menu/Counter**] key > [**Common Settings**] > [**Default Screen**]

Item	Description
Default Screen	Select the screen appearing right after start-up (default screen). **Value: Home, Copy, Send, FAX*1, Custom Box, Job Box, Removable Memory, Sub Address Box*1, Polling Box*1, Favorites, Status, Application Name*2**

*1 Only on products with the fax function installed.
*2 The running application will be displayed.
Application (page 5-13)

Sound

[**System Menu/Counter**] key > [**Common Settings**] > [**Sound**]

Item		Description
Buzzer		Set options for buzzer sound during the machine operations.
	Volume	Set the buzzer volume level. **Value: 0 (Mute), 1 (Minimum), 2, 3 (Medium), 4, 5 (Maximum)**
	Key Confirmation	Emit a sound when the operation panel and touch panel keys are selected. **Value: Off, On**
	Job Finish	Emit a sound when a print job is normally completed. **Value: Off, On, FAX Reception Only*1**
	Ready	Emit a sound when the warm-up is completed. **Value: Off, On**
	Warning	Emit a sound when errors occur. **Value: Off, On**
	USB Keyboard	Emit a sound to confirm keypresses with a sound. **Value: Off, On**
FAX Speaker Volume*1		**FAX System 11 Operation Guide**
FAX Monitor Volume*1		**FAX System 11 Operation Guide**

*1 Displayed only when the optional FAX Kit is installed.

Original Settings

[**System Menu/Counter**] key > [**Common Settings**] > [**Original Settings**]

Configure settings for originals.

Item		Description
Custom Original Size		Set up frequently-used custom original size. The custom size option is displayed on the screen to select original size. **Value** **Metric** **X: 50 to 356 mm (in 1 mm increments)** **Y: 50 to 216 mm (in 1 mm increments)** **Inch** **X: 1.97 to 14.02" (in 0.01" increments)** **Y: 1.97 to 8.50" (in 0.01" increments)** **X=Length, Y=Width** Horizontal 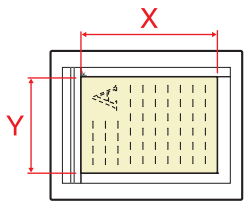
Auto Detect Original Size (DP)		Select whether to automatically detect originals of the document processor.
	Auto Detect	Select whether to enable automatic detection of original size. **Value: off, on**
	System of Units	Select inch or metric for the unit of original size detection. **Value: Metric, Inch** **NOTE** When [**Auto Detect**] is set to [**Off**], this function will not be displayed.
	Legal/OficioII/ 216 x 340 mm	As Legal, OficioII and 216 x 340 mm are similar in size, select either one of them for automatic detection. **Value: Legal, OficioII, 216 x 340 mm** **NOTE** When [**Auto Detect**] is set to [**Off**], this function will not be displayed. When [**System of Units**] is set to [**Metric**], this function will not be displayed.

Item	Description
Default Original Size (Platen)	Set the default original size. **Value** **Off** **Metric: A4, A5, A6, B5, B6, Folio, 216 × 340 mm** **Inch: Letter, Legal, Statement, Executive, Oficio II** **Others: 16K** **NOTE** When [**Auto Detect**] is set to [**Off**], this function will not be displayed.
Default Original Size	Set the default original size. **Value** **Metric: A4, A5, A6, B5, B6, Folio, 216×340mm** **Inch: Letter, Legal, Statement, Executive, OficioII** **Others: 16K** **NOTE** When [**Auto Detect**] is set to [**On**], this function will not be displayed.

Paper Settings

[**System Menu/Counter**] key > [**Common Settings**] > [**Paper Settings**]

Configure settings for paper.

Item	Description
Custom Paper Size	Set up frequently-used custom paper size. One custom paper size is set for each paper supply source. The custom size option is displayed on the screen to select paper size.
Cassette 1 Size	Register the custom paper size to be used in Cassette 1. **Value** **Metric** **X: 148 to 356 mm (in 1 mm increments)** **Y: 92 to 216 mm (in 1 mm increments)** **Inch** **X: 5.83 to 14.02" (in 0.01" increments)** **Y: 3.62 to 8.50" (in 0.01" increments)** **X=Length, Y=Width** Horizontal 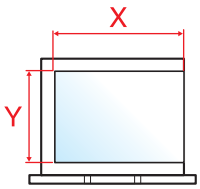
Cassette 2 (to 4) Size	Register the custom paper size to be used in Cassettes 2 to 4. **Value** **Metric** **X: 148 to 356 mm (in 1 mm increments)** **Y: 92 to 216 mm (in 1 mm increments)** **Inch** **X: 5.83 to 14.02" (in 0.01" increments)** **Y: 3.62 to 8.50" (in 0.01" increments)**
MP Tray Size	Register the custom paper size to be used in the multi purpose tray. **Value** **Metric** **X: 148 to 356 mm (in 1 mm increments)** **Y: 70 to 216 mm (in 1 mm increments)** **Inch** **X: 5.83 to 14.02" (in 0.01" increments)** **Y: 2.76 to 8.50" (in 0.01" increments)** **X=Length, Y=Width** Horizontal 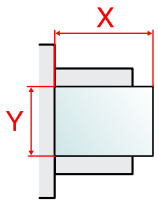 Vertical 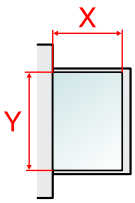

Item	Description
Media Type Setting	Select weight for each media type. For Custom 1-8, settings for duplex printing and media type name can be changed. Media Type Setting (page 8-15)
Default Paper Source	Select the default paper source from Cassette 1-4 and multi purpose tray. **Value: Cassette 1 to 4, Multi Purpose Tray** **NOTE** [**Cassette 2**] to [**Cassette 4**] are displayed when the following optional paper feeder is installed. [**Cassette 2**]: When a paper feeder (500-sheet) is installed. [**Cassette 3**]: When a paper feeder (500-sheet x 2) or large capacity paper feeder (2,000-sheet) is installed. [**Cassette 4**]: When a paper feeder (500-sheet x 2) is installed.
Paper Selection	Set the default paper selection. **Value** **Auto: Automatically select the cassette containing paper in the same size as originals.** **Default Paper Source: Select paper source set by "Default Paper Source".**
Media for Auto (Color) **Media for Auto (B&W)**	Select a default media type for auto paper selection when [**Auto**] is selected of Paper Selection. If [**Plain**] is selected, the paper source with plain paper loaded in the specific size is selected. Select [**All Media Types**] for the paper source with any kind of paper loaded in the specific size. **Value: All Media Types, Plain, Transparency, Rough, Vellum, Labels, Recycled, Preprinted, Bond, Cardstock, Color, Prepunched, Letterhead, Envelope, Thick, Coated, High Quality, Custom 1 to 8**
Special Paper Action	When printing on Prepunched, Preprint, and Letterhead, punch-holes might not be aligned or the print direction might be upside-down depending on how originals are set and the combination of copying functions. In such a case, select [**Adjust Print Direction**] to adjust the print direction. When paper orientation is not important, select [**Speed Priority**]. If [**Adjust Print Direction**] is selected, load paper according to the steps below. Example: copying on Letterhead 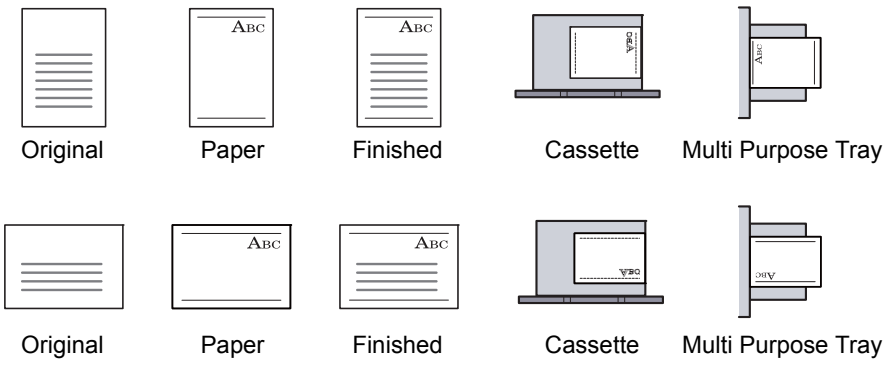 **Value: Adjust Print Direction, Speed Priority**

Media Type Setting

The following media type and paper weight combinations are available.

Paper Weight	Weight (g/m^2)	Paper Weight	Weight (g/m^2)
Light	52 g/m² to 59 g/m²	**Heavy 1**	106 g/m² to 128 g/m²
Normal 1	60 g/m² to 74 g/m²	**Heavy 2**	129 g/m² to 163 g/m²
Normal 2	75 g/m² to 90 g/m²	**Heavy 3**	164 g/m² to 220 g/m²
Normal 3	91 g/m² to 105 g/m²	**Extra Heavy**	Transparencies

Each media type's default weight is indicated.

Media Type	Default	Media Type	Default
Plain	Normal 2	**Color**	Normal 3
Rough	Normal 3	**Prepunched**	Normal 2
Vellum	Heavy 1	**Letterhead**	Normal 2
Labels	Heavy 2	**Envelope**	Heavy 2
Recycled	Normal 2	**Thick**	Heavy 2
Preprinted	Normal 2	**High Quality**	Normal 2
Bond	Normal 3	**Coated**	Heavy 1
Cardstock	Heavy 3	**Custom 1 - 8**	Normal 2

For Custom 1-8, settings for duplex printing and media type name can be changed.

Item		Description
Duplex Print	**Prohibit**	Duplex printing allowed.
	Permit	Duplex printing not allowed.
Name		Change names for Custom 1-8. Names should be not more than 16 characters. Selecting media type at multi purpose tray, the name after change will be displayed. Character Entry Method (page 11-8)

Function Defaults

[**System Menu/Counter**] key > [**Common Settings**] > [**Function Defaults**]

Item	Description
File Format	Select the default type of the files to be sent. **Value: PDF, High Comp. PDF, TIFF, JPEG, XPS, OpenXPS**
Original Orientation	Set the original orientation defaults. **Value: Top Edge on Top, Top Edge on Left**
Collate/Offset	Set the defaults for Collate. **Value** **Without optional Sheet Finisher: Off, On** **With optional Sheet Finisher: Off, Collate Only, Offset Each Page, Offset Each Set**
File Separation	Select the default file separation setting. **Value: Off, Each Page**
Scan Resolution	Select the default scanning resolution. **Value: 600×600dpi, 400×400dpi Ultra Fine, 300×300dpi, 200×400dpi Super Fine, 200×200dpi Fine, 200×100dpi Normal**
Color Selection (Copy)	Set the default copying color mode setting. **Value: Auto Color, Full Color, Black & White**
Color Select.(Send/Store)	Select the default color mode for scanning documents. **Value: Auto (Color/Gray), Auto (Color/B & W), Full Color, Grayscale, Black & White**
Original Image (Copy)	Set the default original document type for copying. **Value: Text+Photo, Photo, Text, Graphic/Map, Printer Output**
Original Image (Send/Store)	Set the default original document type for sending/storing. **Value: Text+Photo, Photo, Text, Text (for OCR), Light Text/Line** **NOTE** [Text (for OCR)] is only available when "Color Selection" is set to [Auto (Color/B & W)] or [Black & White].
Background Density Adj. (Copy)	Set the default Backgrnd Density (Copy). **Value: Off, Auto, Manual (Darker 5)**
Background Density Adj. (Send/Store)	Set the default Backgrnd Density (Send/Store). **Value: Off, Auto, Manual (Darker 5)**
EcoPrint	Select the EcoPrint default. **Value: Off, On**
Prevent Bleed-through (Copy)	Set the default value for preventing bleed-through (Copy). **Value: Off, On**
Prevent Bleed-through (Send/Store)	Set the default Prevent Bleed (Send/Store). **Value: Off, On**
Skip Blank Page (Copy)	Set the default Skip Blank Page (Copy) settings. **Value: Off, On**
Skip Blank Page (Send/Store)	Set the default Skip Blank Page (Send/Store) settings. **Value: Off, On**
FAX TX Resolution	**FAX System 11 Operation Guide**

Item		Description
Zoom		Select the enlarged/reduced default when paper size/sending size changed after the originals set. **Value: 100%, Auto**
Continuous Scan (Except FAX)		Set the continuous scan defaults. **Value: Off, On**
Continuous Scan (FAX)		**FAX System 11 Operation Guide**
File Name Entry		Set an automatically entered name (default) for jobs. Additional information such as Date and Time and Job No. can also be set. **Value** **File Name: Up to 32 characters can be entered.** **Additional Info: None, Date and Time, Job No., Job No. & Date and Time, Date and Time & Job No.**
E-mail Subject/Body		Set the subject and body automatically entered (default subject and body) when sending the scanned originals by E-mail. **Value** **Subject: Up to 60 characters can be entered.** **Body: Up to 500 characters can be entered.**
FTP Encrypted TX		Set the default value for document encryption during transmission. **Value: Off, On** **NOTE** This setting is displayed when the secure protocol "SSL" setting is [**On**].
JPEG/TIFF Print		Select the image size (resolution) when printing JPEG or TIFF file. **Value: Paper Size, Image Resolution, Print Resolution**
XPS Fit to Page		Set the default value for the XPS fit to page function. **Value: Off, On**
Detail Settings		—
	Image Quality	Set the default value for the image quality adjustment range when selecting the file format with which to send and store images. **Value: 1 Low (High Comp.), 2, 3, 4, 5 High (Low Comp.)**
	PDF/A	Set the default value for PDF/A when selecting the file format with which to send and store images. **Value: Off, PDF/A-1a, PDF/A-1b**
	High Comp. PDF	Select the default quality setting for high compressed PDF files. **Value: Compression Ratio Priority, Standard, Quality Priority**
	Blank Detection Level (Copy)	Select the default Blank Detection Level (Copy) settings. **Value: Low, Middle, High**
	Blank Detection Level (Send/Store)	Select the default Blank Detection Level (Send/Store) settings. **Value: Low, Middle, High**

Paper Output

[**System Menu/Counter**] key > [**Common Settings**] > [**Paper Output**]

Item	Description
Paper Output	Select the output tray respectively for copy jobs, print jobs from Document Box, computers, and FAX RX data. **Value:** **Inner Tray: Outputs to the Inner Tray of the machine** **Job Separator*1: Delivery to the Job Separator.** **Tray A*2: Delivery to tray A of the Mailbox.** **Tray 1 to 5: Delivery to trays 1 to 5 (tray 1 is the uppermost tray) of the optional Mailbox.** **NOTE** When [**Heavy 3**] (164 g/m^2 -) or higher is set in Paper Weight and Mailbox (Option) is set for the output destination, the output destination is automatically changed to a tray that can be used. FAX RX data output can be specified when the optional FAX Kit is installed.

*1 Displayed only when the optional Job Separator is installed.
*2 Displayed only when the optional Mailbox is installed.

Preset Limit

[**System Menu/Counter**] key > [**Common Settings**] > [**Preset Limit**]

Item	Description
Preset Limit	Restrict the number of copies that can be made at one time. **Value: 1 to 999 copies.**

Error Handling

[**System Menu/Counter**] key > [**Common Settings**] > [**Error Handling**]

Select whether to cancel or continue the job when error has occurred.

Item	Description
Duplexing Error	Set what to do when duplex printing is not possible for the selected paper sizes and media types. **Value** **1-sided: Printed in 1-sided** **Display Error: Message to cancel printing is displayed.**
Finishing Error	Set alternative actions when finishing (Staple/Punch/Offset/Fold/Auto Image Rotation) is not available for the selected paper size or media type. **Value** **Ignore: The setting is ignored and the job is printed.** **Display Error: Message to cancel printing is displayed.**
No Staple Error	Set what to do when staples run out during printing. **Value** **Ignore: Printing continues without stapling.** **Display Error: Message to cancel printing is displayed.** **NOTE** Requires the optional Sheet Finisher.
Stapling Limit Error	Set what to do when stapling capacity is exceeded during printing. **Value** **Ignore: Printing continues without finishing.** **Display Error: Message to cancel printing is displayed.** **NOTE** Requires the optional Sheet Finisher.
Paper Mismatch Error	Set what to do when the selected paper size or type does not match paper size or type loaded in the specified paper source while printing from the computer by specifying the cassette or multi-purpose tray. **Value** **Ignore: The setting is ignored and the job is printed.** **Display Error: Message to cancel printing is displayed.**
Inserted Paper Mismatch	Set what to do when it is detected that the cassette paper size setting does not match the actual paper size that is fed. **Value** **Ignore: The setting is ignored and the job is printed.** **Display Error: Message to cancel printing is displayed.**

Color Toner Empty Action

[**System Menu/Counter**] key > [**Common Settings**] > [**Color Toner Empty Action**]

Item	Description
Color Toner Empty Action	Select whether printing is prohibited or the Print in Black and White setting is used for printing once the color toner runs out. **Value: Stop printing, Print in Black & White**

Measurement

[**System Menu/Counter**] key > [**Common Settings**] > [**Measurement**]

Item	Description
Measurement	Select inch or metric for the unit for paper dimensions. **Value: mm, inch**

Low Toner Alert Level

[**System Menu/Counter**] key > [**Common Settings**] > [**Low Toner Alert Level**]

Item	Description
Low Toner Alert	Set the amount of remaining toner to notify the administrator when to order a toner when the toner is running low. This notification is used for event report, Status Monitor, SNMP Trap. **Value: Off, On** **NOTE** If [**On**] is selected, set the amount of remaining toner to alert. The setting range is 5 to 100% (in 1% increments).

Keyboard Layout

[**System Menu/Counter**] key > [**Common Settings**] > [**Keyboard Layout**]

Item	Description
Keyboard Layout	Change the layout of the touch panel keyboard used to enter characters. **Value: QWERTY, QWERTZ, AZERTY**

USB Keyboard Type

[**System Menu/Counter**] key > [**Common Settings**] > [**USB Keyboard Type**]

Item	Description
USB Keyboard Type	Select the type of USB keyboard that you want to use. **Value: US-English, US-English with Euro, French, German**

Offset Documents by Job

[**System Menu/Counter**] key > [**Common Settings**] > [**Offset Documents by Job**]

Item	Description
Offset Documents by Job	Select whether to offset documents by Job. **Value: Off, On** **NOTE** This function is displayed when an optional 1,000-Sheet Finisher is installed.

Offset One Page Documents

[**System Menu/Counter**] key > [**Common Settings**] > [**Offset One Page Documents**]

Item	Description
Offset One Page Documents	Set whether one-page documents are sorted. **Value: Off, On** **NOTE** This function is displayed when an optional 1,000-Sheet Finisher is installed.

Format SSD

[**System Menu/Counter**] key > [**Common Settings**] > [**Format SSD**]

Format an optional SSD.
When an optional SSD is inserted into the printer for the first time, it must be formatted before use.

IMPORTANT
Formatting will destroy any existing data on a storage device including a used SSD.

NOTE
This function will not be displayed when the optional Data Security Kit is installed.

Format SD Card

[**System Menu/Counter**] key > [**Common Settings**] > [**Format SD Card**]

Format an optional SD/SDHC memory card.
A new SD card must be formatted before it can be used in the machine.

IMPORTANT
- **Formatting will destroy any existing data on a storage device including a used SD card.**
- **If you have installed application, do not format the SD card to avoid the removal of the application in the SD card.**

Display Status/Log

[**System Menu/Counter**] key > [**Common Settings**] > [**Display Status/Log**]

Item		Description
Display Status/Log		Set the display method of the Status/Log.
	Display Jobs Detail Status	**Value: Show All, My Jobs Only, Hide All**
	Display Jobs Log	**Value: Show All, My Jobs Only, Hide All**
	Display FAX Log*1	**Value: Show All, Hide All**

*1 Displayed only when the optional FAX Kit is installed.

Function Key Usage

[**System Menu/Counter**] key > [**Common Settings**] > [**Function Key Usage**]

Item		Description
Function Key Usage		Select whether to enable the [**Copy**] Key, [**Send**] Key, and [**FAX**] Key on the operation panel.
	Copy Key	**Value: Disable, Enable**
	Send Key	**Value: Disable, Enable**
	FAX Key*1	**Value: Disable, Enable**

*1 Displayed only when the optional FAX Kit is installed.

Home

[**System Menu/Counter**] key > [**Home**]

Configure settings for Home screen.

Editing the Home Screen (page 2-13)

Copy

[**System Menu/Counter**] key > [**Copy**]

Configures settings for copying functions.

Item	Description
Auto Paper Selection	If [**Auto**] is selected for Paper Selection, set the paper size selection method when the zoom changes. **Value** **Most Suitable Size: Select paper based on the current zoom and the size of the original.** **Same as Original Size: Select paper that matches the size of the original, regardless the zoom.**
Auto % Priority	When a paper source of different size from the original is selected, select whether automatic zoom (reduce/zoom) is performed. **Value: Off, On**
Reserve Next Priority	Specify whether the default screen appears when a subsequent copy job is reserved while printing is in progress. To have the default screen appear, select [**On**]. **Value: Off, On**
DP Read Action	When the document processor is used, select the scanning operation for the document processor. **Value** **Speed Priority: Gives priority to scanning speed.** **Quality Priority: Gives priority to image quality at a slightly slower scan speed.**

Send

[**System Menu/Counter**] key > [**Send**]

Configures settings for sending functions.

Item		Description
Dest. Check before Send		When performing sending jobs, display the confirmation screen of destinations after pressing the [**Start**] key.*1 **Value: Off, On**
Entry Check for New Dest.		When adding new destination, display the entry check screen to check the entered destination.*1 **Value: Off, On**
Send and Forward		Set whether to send the original to another destination and store it when sending images.
	Forward	Set the rule to send the original. **Value: Off, On** **NOTE** When selecting [**On**], select rules to forward from [**FAX**]*2, [**E-mail**], [**Folder (SMB)**] and [**Folder (FTP)**].
	Destination	Set the destination to which the original is forwarded. One destination can be set. You can check and edit the set address. Follow the steps below to register the destination. • Address Book • Ext. Address Book • Address Entry (E-mail) • Address Entry (folder) Specifying Destination (page 5-35)
Color TIFF Compression		Select the compression method for TIFF images handled on this machine. **Value: TIFF V6, TTN2**
Default Screen		Use this procedure to set the default screen displayed when you select the [**Send**] key. **Value: Destination, Address Book, Ext. Address Book, One Touch**
New Destination Entry		Select whether to permit direct entry of destination.*1 **Value: Prohibit, Permit**
Recall Destination		Select whether to permit usage of [**Recall**] on the Send screen.*1 **Value: Prohibit, Permit**

*1 Also applies when sending the fax.

*2 Displayed only when the optional FAX Kit is installed.

Document Box

[**System Menu/Counter**] key > [**Document Box**]

Configures settings related to the Custom Box, Job Box, Sub Address Box and Polling Box.

Item		Description
Custom Box		Configure settings for Custom Box.
	Add/Edit Box	Creating a New Custom Box (page 5-43)
	Default Setting	Auto File Deletion Time Set the time to automatically delete stored documents.
Sub Address Box[*1]		**FAX System 11 Operation Guide**
Job Box		Configure settings for Job Box.
	Quick Copy Job Retention	To maintain free space on the box, you can set the maximum number of stored jobs. **Value: number between 0 and 300** **NOTE** When 0 is set, Quick Copy cannot be used.
	Deletion of Job Retention	This setting specifies that documents, such as Private Printing, Quick Copying, or Proof and Hold Printing, saved temporarily in the job box are automatically deleted after they have been saved for a set time. **Value: Off, 1 hour, 4 hours, 1 day, 1 week** **NOTE** This function is valid for documents saved after the function is set. Regardless of this function setting, temporary documents are deleted when the power switch is turned off.
	Storage Media	Select which storage media to use. **Value: SSD, SD Card** **NOTE** This setting is not displayed if the optional SSD or SD card is not installed.
Polling Box[*1]		**FAX System 11 Operation Guide**

*1 Only on products with the fax function installed.

FAX

[**System Menu/Counter**] key > [**FAX**]

Configure settings for FAX.

FAX System 11 Operation Guide

Application

[**System Menu/Counter**] key > [**Application**]

Configure settings for Application.

Item	Description
Application	You can install, activate, deactivate, and uninstall applications. Application (page 5-13)

Internet

[**System Menu/Counter**] key > [**Internet**]

Set the proxy for connection to the Internet from an application.

Item		Description
Proxy		Specify the proxy settings. **Value**: **Off, On**
	Use Same Proxy	Set whether or not the same proxy server is used for all protocols. If the same proxy server is not used, select [**Off**]. **Value**: **Off, On**
	HTTP Proxy Server	Set a proxy server (HTTP). **Value: (Enter the proxy address and port number.)**
	HTTPS Proxy Server	Set a proxy server (HTTPS). This setup is available when [Use Same Proxy] is [Off]. **Value: (Enter the proxy address and port number.)**
	No Proxy Domains	Set domains for which no proxy is used. **Value: (Enter the domain name.)**

Address Book/One Touch

Address Book

[**System Menu/Counter**] key > [**Address Book/One Touch**] > [**Address Book**]

Configure settings for address book.

Adding a Destination (Address Book) (page 3-22)

One Touch Key

[**System Menu/Counter**] key > [**Address Book/One Touch**] > [**One Touch Key**]

Configure settings for One Touch Key.

Adding a Destination on One Touch Key (One Touch Key) (page 3-27)

Address Book Defaults

[**System Menu/Counter**] key > [**Address Book/One Touch**] > [**Address Book Defaults**]

Item	Description
Sort	Select the default sort setting of the address for the address book. **Value: No., Name**
Address Book	Specify the default sort setting of the external address book.

Print list

[**System Menu/Counter**] key > [**Address Book/One Touch**] > [**Print list**]

FAX System 11 Operation Guide

User Login/Job Accounting

[**System Menu/Counter**] key > [**User Login/Job Accounting**]

Configure settings related to machine management.

Overview of User Login Administration (page 9-2)
Overview of Job Accounting (page 9-31)
Unknown ID Job (page 9-46)

Printer

[**System Menu/Counter**] key > [**Printer**]

Printing from computers, settings are generally made on the application software screen. However, the following settings are available for configuring the defaults to customize the machine.

Item	Description
Emulation	Select the emulation for operating this machine by commands oriented to other types of printers. **Value: PCL6, KPDL, KPDL (Auto)** **NOTE** When you have selected [**KPDL (Auto)**], set "Alt Emulation", too. When you have selected [**KPDL**] or [**KPDL (Auto)**], set "KPDL Error Report", too.
Alt Emulation	When you have selected [**KPDL (Auto)**] as emulation mode, you can switch between KPDL and another emulation mode (alternative emulation) automatically according to the data to print. **Value: PCL6**
KPDL Error Report	When an error has occurred during printing in KPDL emulation mode, set whether or not the error report is output. **Value: Off, On**
Color Setting	You can choose whether reports are printed in color or black and white. **Value: Color, Black & White**
EcoPrint	EcoPrint conserves toner when printing. This is recommended for test copies where faded printing is not a problem. **Value: Off, On**
Override A4/Letter	Select whether to treat A4 size and Letter, which are similar in size, as the same size when printing. **Value** **Off: A4 and Letter are not regarded as the same in size.** **On: A4 and Letter are regarded as the same in size. The machine will use whichever size is in the paper source.**
Duplex	Select binding orientation for duplex mode. **Value: 1-sided, 2-sided Bind LongEdge, 2-sided Bind ShortEdge**
Copies	Set the default number of copies, from 1 to 999. **Value: 1 to 999 copies**
Orientation	Set the default orientation, [**Portrait**] or [**Landscape**]. **Value: Portrait, Landscape**

Item	Description
Wide A4	Turn this to on to increase the maximum number of characters that can be printed in a line for an A4 page (78 characters at 10 pitch) and Letter size page (80 characters at 10 pitch). This setting is only effective in PCL6 emulation. **Value: Off, On**
Form Feed TimeOut	Receiving print data from the computer, the machine may sometimes wait if there is no information signaling that the last page does not have any more data to be printed. When the preset timeout passes, the machine automatically prints paper. The options are between 5 and 495 seconds. **Value: 5 to 495 seconds (in 5 second increments)**
LF Action	Set the line feed action when the machine receives the line feed code (character code 0AH). **Value: LF Only, LF and CR, Ignore LF**
CR Action	Set the character return action when the machine receives the character return code (character code 0DH). **Value: CR Only, LF and CR, Ignore CR**
Job Name	Set whether the job name set in the printer driver is displayed. **Value: Off, On** **NOTE** When selecting [**On**], select the job name to be displayed from [**Job Name**], [**Job No. & Job Name**], or [**Job Name & Job No.**].
User Name	Set whether the user name set in the printer driver is displayed. **Value: Off, On**
MP Tray Priority	If paper is set in the MP Tray then it is possible for priority to be given to that MP tray in the paper feed. **Value** **Off: The printer driver settings are followed.** **Auto Feed: If Auto is selected in the printer driver and there is paper in the MP tray then the paper feed will be from the MP tray.** **Always: If there is paper in the MP tray then the paper feed will be from the MP tray regardless of what is set in the printer driver.**
Paper Feed Mode	While printing from the computer, select how to feed paper when the paper source and type are specified. **Value** **Auto: Search the paper source that matches the selected paper size and type.** **Fixed: Print on paper loaded in the specified paper source.**

Item	Description
Auto cassette Change	Select the following actions when the paper runs out in the paper source while printing. **Value: Off, On** **NOTE** When selecting [**Off**], the machine displays "Add the following paper in cassette #." (# is a cassette number) or "Add the following paper in the multi purpose tray.", and stops printing. Load the paper according to the paper source displayed to resume printing. To print from the other paper cassette, select [**Paper Selection**]. Select the desired paper source. When selecting [**On**], the machine continues printing automatically when the other cassette contains the same paper as the currently-used cassette.
Gloss Mode	Gloss Mode increases the effect of glossiness in printing. However, printing takes longer time. **Value: Off, On** **IMPORTANT** **Gloss Mode is not available when [Labels] or [Transparency] is selected as the paper type setting.** Cassette/MP Tray Settings (page 8-8) **Depending on the paper used, printing in gloss mode may cause curl in paper. To reduce curl, try using thicker paper.**

System/Network

Configures machine system settings.

Network

[**System Menu/Counter**] key > [**System/Network**] > [**Network**]

Configures network settings.

Host Name

Item	Description
Host Name	Check the host name of the machine. Host name can be changed from Command Center RX. Changing Device Information (page 2-50)

TCP/IP Settings

Item		Description
TCP/IP		Set up TCP/IP to connect to the Windows network. **Value: Off, On**
IPv4 Settings		Set up TCP/IP (IPv4) to connect to the network. This setting is available when [**TCP/IP**] is set to [**On**].
	DHCP	Select whether or not to use the DHCP (IPv4) server. **Value: Off, On**
	Auto-IP	Select whether to use Auto-IP. **Value: Off, On**
	IP Address	Set the IP address. **Value: ###.###.###.###** **NOTE** When DHCP is set to [**On**], this function will be grayed out and the value cannot be entered.
	Subnet Mask	Set the IP subnet mask. **Value: ###.###.###.###** **NOTE** When DHCP is set to [**On**], this function will be grayed out and the value cannot be entered.
	Default Gateway	Set the IP gateway address. **Value: ###.###.###.###** **NOTE** When DHCP is set to [**On**], this function will be grayed out and the value cannot be entered.

IMPORTANT

After changing the setting, restart the network or turn the machine OFF and then ON.

Item		Description
IPv6 Settings		Set up TCP/IP (IPv6) to connect to the network. This setting is available when [**TCP/IP**] is [**On**].
	IPv6	Select whether to use IPv6. **Value: Off, On** **NOTE** Selecting [**On**] displays IP address in [**IP Address (Link Local)/Prefix Length**] after restarting the network.
	Manual Setting	Manually specify the IP address, prefix length, and gateway address of TCP/IP (IPv6). **Value** **IP Address (Manual): 128-bits address is expressed in eight groups consisting of four-digit hexadecimal digits. The groups are separated by colon (:).** **Prefix Length: 0 to 128** **Default Gateway: 128-bits address is expressed in eight groups consisting of four-digit hexadecimal digits. The groups are separated by colon (:).** **NOTE** This function is displayed when [**IPv6**] is set to [**On**]. To enter [**Default Gateway**], set [**RA (Stateless)**] to [**Off**].
	RA (Stateless)	Select whether to use RA (Stateless). **Value: Off, On** **NOTE** This function is displayed when [**IPv6**] is set to [**On**]. Selecting [**On**] displays IP address in [**IP Address (Stateless)/Prefix Length**] after restarting the network.
	DHCP	Select whether to use the DHCP (IPv6) server. **Value: Off, On** **NOTE** This function is displayed when [**IPv6**] is set to [**On**]. Selecting [**On**] displays IP address in [**IP Address (Stateful)/Prefix Length**] after restarting the network.
Bonjour		Select whether or not to use Bonjour. **Value: Off, On**

IMPORTANT

After changing the setting, restart the network or turn the machine OFF and then ON.

Item		Description
Protocol Detail		—
	NetBEUI	Selects whether or not to receive documents using NetBEUI.*1 **Value: Off, On**
	LPD	Select whether or not to receive documents using LPD.*1 **Value: Off, On**
	SMTP (E-mail TX)	Select whether or not to send e-mail using SMTP. **Value: Off, On**
	POP3 (E-mail RX)	Select whether or not to receive e-mail using POP3. **Value: Off, On**
	FTP Client (Transmission)	Select whether or not to send documents using FTP. To use the FTP Client, set the protocol to [**On**]. The default port number is 21. **Value: Off, On**
	FTP Server (Reception)	Select whether or not to receive documents using FTP.*1 **Value: Off, On**
	SMB Client (Transmission)	Select whether or not to send documents using SMB. To use the SMB Client, set the protocol to [**On**]. The default port number is 445. **Value: Off, On**
	LDAP	Select whether or not to use LDAP. **Value: Off, On**
	SNMP	Select whether or not to communicate using SNMP.*1 **Value: Off, On**
	SNMPv3	Select whether or not to communicate using SNMPv3.*1 **Value: Off, On**
	HTTP	Select whether or not to communicate using HTTP.*1 **Value: Off, On**
	HTTPS	Select whether or not to communicate using HTTPS.*1 *2 **Value: Off, On**
	IPP	Select whether or not to receive documents using IPP. To use the IPP protocol, set [**IPP**] to [**On**], and set [**SSL**] to [**Off**]. In addition, select [**Not Secure (IPP&IPPS)**] on IPP Security under Security Settings from the Command Center RX. The default port number is 631.*1 *2 **Value: Off, On**
	IPP over SSL	Select whether or not to use IPP over SSL. To use the IPP protocol, set [**IPP**] and [**SSL**] to [**On**]. The default port number is 443.*1 *2 **Value: Off, On** **NOTE** When selecting [**On**], it also requires a certificate for SSL. The default certificate is the self-certificate of the machine. **Command Center RX User Guide**
	RAW Port	Select whether or not to receive documents using RAW Port.*1 **Value: Off, On**

*1 The setting will be changed after restarting the device or the network for the machine.
*2 Set "SSL" to [**On**] in "Secure Protocol".
Secure Protocol (page 8-33)

Item			Description
	ThinPrint		Select whether to use ThinPrint. To use the ThinPrint protocol, set the protocol to [**On**]. The default port number is 4000.*1 *2 **Value: Off, On** **NOTE** This function is displayed only when the optional ThinPrint Option is activated.
		ThinPrintOver SSL	To use the ThinPrint over SSL protocol, set [**ThinPrintOverSSL**] and [**SSL**] to [**On**]. **Value: Off, On** **NOTE** When selecting [**On**], it also requires a certificate for SSL. The default certificate is the self-certificate of the machine. **Command Center RX User Guide**

*1 The setting will be changed after restarting the device or the network for the machine.
*2 Set "SSL" to [**On**] in "Secure Protocol".
Secure Protocol (page 8-33)

WSD Scan

Item	Description
WSD Scan	Select whether or not to use WSD Scan.*1 **Value: Off, On**

*1 The setting will be changed after restarting the device or the network for the machine.

WSD Print

Item	Description
WSD Print	Set whether to use our proprietary web services. WIA driver, TWAIN driver and Network FAX driver use this Enhanced WSD web service.*1 **Value: Off, On**

*1 The setting will be changed after restarting the device or the network for the machine.

Enhanced WSD

Item	Description
Enhanced WSD	Set whether to use our proprietary web services.*1 **Value: Off, On** **NOTE** Selecting [**Off**] will disable the functionality of WIA, TWAIN, and Network FAX driver.

*1 The setting will be changed after restarting the device or the network for the machine.

IMPORTANT
After changing the setting, restart the network or turn the machine OFF and then ON.

Enhanced WSD (SSL)

Item	Description
Enhanced WSD (SSL)	Set whether to use our proprietary web services over SSL.*1 *2 **Value: Off, On** **NOTE** Selecting [**Off**] will disable the functionality of WIA, TWAIN, and Network FAX driver.

*1 The setting will be changed after restarting the device or the network for the machine.
*2 Set "SSL" to [**On**] in "Secure Protocol".
Secure Protocol (page 8-33)

IPSec

Item	Description
IPSec	Make this setting when you use IPSec. **Value: Off, On**

Secure Protocol

Item	Description
SSL	Select whether or not to use SSL. **Value: Off, On**
IPP Security	Select the IPP security level. This setup is available when SSL is [**On**]. **Value: IPP/IPP over SSL, IPPoverSSL only**
HTTP Security	Select the HTTP security level. This setup is available when SSL is [**On**]. **Value: HTTP/HTTPS, HTTPS Only**
SMTP Security	Select the communication protocol according to the type of security employed by the SMTP server. This setup is available when SSL is [**On**]. **Value: Off, SSL/TLS, STARTTLS**
POP3 Security (User 1)	Select the communication protocol according to the type of security employed by the POP3 server. This setup is available when POP3 is [**On**]. **Value: Off, SSL/TLS, STARTTLS**
POP3 Security (User 2)	
POP3 Security (User 3)	

LAN Interface

Item	Description
LAN Interface	Specify the settings for the LAN interface to be used. **Value: Auto, 10Base-Half, 10Base-Full, 100Base-Half, 100Base-Full, 1000BASE-T**

IMPORTANT
After changing the setting, restart the network or turn the machine OFF and then ON.

Ping

Item	Description
Ping	Checks if communication with the destination by entering the host name or IP address of the destination is possible. **NOTE** If [**Network Interface (Send)**] is set to [**Optional NIC**], this item is not displayed.

Restart Network

Item	Description
Restart Network	Restarts the network.

Proxy

Item		Description
Proxy		Set the proxy for connection to the Internet from an application. **Value: Off, On**
	Use the Same Proxy Server for All Protocols	Set whether the same proxy server is used for all protocols. **Value: Off, On**
	Proxy Server (HTTP)	Set a proxy server (HTTP). **Value: (Enter the proxy address and port number.)**
	Proxy Server (HTTPS)	Set a proxy server (HTTPS). This setup is available when "Use the Same Proxy Server for All Protocols" is [**Off**]. **Value: (Enter the proxy address and port number.)**
	Do Not Use Proxy for Following Domains	Set domains for which no proxy is used. **Value: (Enter the domain name.)**

Optional Network

[**System Menu/Counter**] key > [**System/Network**] > [**Optional Network**]

Configure settings for the optional network interface kit.

NOTE

This menu is displayed when the optional network interface kit or Wireless Network Interface Kit is installed.

Basic

Item	Description
Host Name	Check the host name of the machine. Host name can be changed from Command Center RX. Changing Device Information (page 2-50)
TCP/IP Setting	For details on setting value. TCP/IP Settings (page 8-29) IPSec (page 8-33)
LAN Interface	Select the LAN Interface type.*1 **Value: Auto, 10Base-Half, 10Base-Full, 100Base-Half, 100Base-Full, 1000BASE-T** **NOTE** This function is displayed when the optional network interface kit is installed.
MAC Address Filter	Select whether to use MAC Address Filter. **Operation Guide** for the optional network interface kit **Value: Off, On**
Restart Network	Restarts the network card of the device.

*1 The setting will be changed after restarting the device or network.

Wireless Network

[**System Menu/Counter**] key > [**System/Network**] > [**Wireless Network**]

Configure settings for the optional Wireless Network Interface Kit.

Setup

NOTE

This function is displayed when the optional Wireless Network Interface Kit is installed.

Item		Description
Connection Status		When the optional Wireless Network Interface Kit is installed, you can check the wireless LAN status.
Quick Setup Wizard		If the machine will connect to an access point that supports the automatic wireless network setup, connection settings can be configured by Quick Setup.
	Available Network	Select access points to which the machine can be connected, Enter the Preshared Key and start a connection.
	Push Button Method	If the access point supports the push button method, wireless settings can be configured using the push button. This setting executes push button, and the connection is started by pressing the push button on the access point. **NOTE** The push button method supports only the WPS.
	PIN Code Method (Device)	Starts connection using the machine's PIN code. Enter the PIN code into the access point. The PIN code of the machine is automatically generated.
	PIN Code Method (Terminal)	Starts connection using the PIN code of the access point. Enter the PIN code of the access point.

Item		Description
Custom Setup		The detailed settings for wireless LAN can be changed.
	Network Name (SSID)	Set the SSID (Service Set Identifier) of the wireless LAN to which the machine connects. **NOTE** Up to 32 characters can be entered.
	Connection Mode	Set the connection mode. **Value: Ad Hoc, Infrastructure** **NOTE** **Ad Hoc**: Directly communicates with the device without going through an access point. This method cannot be used to connect to two or more devices. **Infrastructure**: Performs communication through an access point.
	Channel	Set channel. Use [-] / [+] or the numeric keys to enter a number. **Value: 1 to 11**
	Network Authentication	Select network authentication type. To select other options, open the device home page from a computer. **Value: Open, Shared, WPA-PSK*1, WPA2-PSK*1**
	Encryption	Select encryption method. If the option other than [**Disable**] is selected, enter the WEP key or the Preshared key. The setting values vary depending on the Network Authentication setting. Select [**Data Encryption**]. **When Network Authentication is set to [Open] or [Shared]** **Value: Disable, WEP** **When Network Authentication is set to [WPA-PSK] or [WPA2-PSK]** **Value: TKIP*2, AES, Auto*2, Preshared Key** **NOTE** If [**WEP**] is selected, enter the WEP key. Up to 26 characters can be entered. If [**TKIP**], [**AES**] or [**Auto**] is selected, enter the Preshared key. Enter the value in 8 to 64 characters.

*1 Not displayed if you selected [**Ad Hoc**] for "Connection Mode".
*2 Not displayed if you selected [**WPA2-PSK**] for "Network Authentication".

Network Interface (Send)

[**System Menu/Counter**] key > [**System/Network**] > [**Network Interface (Send)**]

NOTE
This function is displayed when the optional network interface kit or Wireless Network Interface Kit is installed.

Item	Description
Network Interface (Send)	Specify the network interface card to be used for the send function, the network authentication and connecting to external address book. **Value: Standard, Optional NIC**

Interface Block Setting

[**System Menu/Counter**] key > [**System/Network**] > [**Interface Block Setting**]

This allows you to protect this machine by blocking the interface with external devices such as USB hosts or optional interfaces.

Item	Description
USB Host	This locks and protects the USB port (USB host). **Value: Unblock, Block**
USB Device	This locks and protects the USB interface connector (USB Device). **Value: Unblock, Block**
USB Storage	This locks and protects the USB memory slot. **Value: Unblock, Block** **NOTE** This function is available when USB Host is set to [**Unblock**].
Optional Interface 1 **Optional Interface 2**	This locks and protects the optional interface slots. **Value: Unblock, Block** **NOTE** If the machine has two optional interface slots, you can set this feature for each slot.

IMPORTANT

After changing the setting, restart the network or turn the machine OFF and then ON.

Security Level

[**System Menu/Counter**] key > [**System/Network**] > [**Security Level**]

Item	Description
Security Level	Specify the security level. **Value** **Low:** **This mode is used during maintenance. Do not use normally.** **High:** **This is the security setting we recommend. Use this setting normally.** **Very High:** **In addition to [High] setting, this setting disables the machine settings to be changed from external command.**

Restart

[**System Menu/Counter**] key > [**System/Network**] > [**Restart**]

Item	Description
Restart	Restart the CPU without turning the power switch off. Use this to deal with any unstable operation by the machine. (Same as the computer restart.)

RAM Disk Setting

[**System Menu/Counter**] key > [**System/Network**] > [**RAM Disk Setting**]

NOTE

This function will not be displayed when the optional SSD is installed.

Item	Description
RAM Disk Setting	A RAM disk can be created and its size can be set. Creating a RAM disk makes it possible to print from a Job Box. **Value** **RAM Disk Setting: Off, On** **RAM Disk Size: The setting range varies depending on the amount of memory installed and the option memory usage setting.**

IMPORTANT

After changing the setting, restart the network or turn the machine OFF and then ON.

Optional Memory

[**System Menu/Counter**] key > [**System/Network**] > [**Optional Memory**]

Item	Description
Optional Memory	When optional memory is installed, select the memory allocation scheme based on the application in which you are using the equipment. **Value: Printer Priority, Normal, Copy Priority**

IMPORTANT

After changing the setting, restart the network or turn the machine OFF and then ON.

Data Security

[**System Menu/Counter**] key > [**System/Network**] > [**Data Security**]

Configure settings for data stored in the optional SSD and machine's memory.

Item	Description
SSD Initialization	Initialize data saved on an optional SSD. ➡ **Data Security Kit (E) Operation Guide** **NOTE** This function is displayed when the optional SSD is installed and the optional Data Security Kit is activated.
Data Sanitization	Return the following information registered in the machine to the factory defaults. • Address Book • Favorites • System settings • Fax transmission and reception / forwarding data • Transmission histories • Data saved in Custom Box • Optional applications **IMPORTANT** **Data saved in an application or SD card cannot be erased. To erase data on an SD card, you must format the SD card.** ➡ Format SD Card (page 8-21) **NOTE** Once in progress, the processing cannot canceled. Before executing this function, disconnect modular, network, and other cables. Do not turn off the power switch while sanitizing the data. If the power is turned off during data erasing, erasing will be executed automatically when the power is restored, however, complete erasure cannot be guaranteed.

Optional Function

[**System Menu/Counter**] key > [**System/Network**] > [**Optional Function**]

Item	Description
Optional Function	You can use the optional applications installed on this machine. ➡ Optional Applications (page 11-6)

Date/Timer/Energy Saver

[**System Menu/Counter**] key > [**Date/Timer/Energy Saver**]

Configures settings related to the date and time.

Item	Description
Date/Time	Set the date and time for the location where you use the machine. If you perform Send as E-mail, the date and time set here will be displayed on the header. **Value: Year (2000 to 2037), Month (1 to 12), Day (1 to 31), Hour (00 to 23), Minute (00 to 59), Second (00 to 59)** Setting Date and Time (page 2-23) **NOTE** If you change the date/time while using the trial version of an application, you will no longer be able to use the application.
Date Format	Select the display format of year, month, and date. The year is displayed in Western notation. **Value: Month/Day/Year, Day/Month/Year, Year/Month/Day**
Time Zone	Set the time difference from GMT. Choose the nearest listed location from the list. If you select a region that utilizes summer time, configure settings for summer time.
Auto Panel Reset	If no jobs are run for a certain period of time, automatically reset settings and return to the default setting. Select to use Auto Panel Reset or not. **Value: Off, On** **NOTE** The time allowed to elapse before the panel is reset is set with the following: Panel Reset Timer (page 8-40)
Panel Reset Timer	If you select [**On**] for Auto Panel Reset, set the amount of time to wait before Auto Panel Reset. **Value: 5 to 495 seconds (in 5 second increments)** **NOTE** This function is displayed when [**Auto Panel Reset**] is set to [**On**].
Low Power Timer	Set amount of time before entering the Low Power mode. **Value** **For Europe: 1 to 60 minutes (1 minute increments)** **Except for Europe: 1 to 240 minutes (1 minute increments)** Low Power Mode (page 2-26)

Item	Description
Sleep Rules (models for Europe)	Select whether to use the Sleep mode for the following functions individually: • Network • Card Reader*1 • FAX*2 • Application **Value: Off, On** **NOTE** If the sleep condition is not turned off, the ID card cannot be recognized.
Sleep Level (models except for Europe)	Select the sleep level. Set the Energy Saver mode to reduce power consumption even more than Quick Recovery mode. **Value: Quick Recovery, Energy Saver** **NOTE** This function will not be displayed when the optional network interface kit is installed.
Sleep Rules	Select whether to use the Energy Saver mode for the following functions individually: • Network • Card Reader*1 • FAX*2 • Application **Value: Off, On** **NOTE** When the machine has entered sleep mode with Energy Saver setting, the ID card cannot be recognized.
Sleep Timer	Set amount of time before entering Sleep. **Value** **For Europe: 1 to 60 minutes (1 minute increments)** **Except for Europe: 1 to 240 minutes (1 minute increments)**
Auto Error Clear	If an error occurs during processing, processing stops to wait for the next step to be taken by the user. In the Auto Error Clear mode, automatically clear the error after a set amount of time elapses. **Value: Off, On**
Error Clear Timer	If you select [**On**] for Auto Error Clear, set the amount of time to wait before automatically clearing errors. **Value: 5 to 495 seconds (in 5 second increments)** **NOTE** This function is displayed when [**Auto Error Clear**] is set to [**On**].
Interrupt Clear Timer	Set the period after which the machine reverts to Normal mode when it has been set to Interrupt Copy mode and then left unused. **Value: 5 to 495 seconds (in 5 second increments)**
Unusable Time*2	**FAX System 11 Operation Guide**.
Ping Timeout	Set the time until timeout occurs when [**Ping**] is executed in "System/Network". **Value: 1 to 30 seconds (in 1 second increments)**

*1 Displayed when the optional Card Authentication Kit is activated.
*2 Displayed only when the optional FAX Kit is installed.

Adjustment/Maintenance

[**System Menu/Counter**] key > [**Adjustment/Maintenance**]

Adjust printing quality and conduct machine maintenance.

Item		Description
Quiet Mode Settings		Lower print and scan speed for quiet processing.
	Quiet Mode	Set the Quiet Mode. Select this mode when the running noise is uncomfortable. **Value: Off, On**
	Specify for Each Job	It is possible to set the use of Quiet Mode for each job, such as copying and sending. Set whether or not to permit the setting for each job. **Value: Permit, Prohibit**
Density Adjustment		Adjust density.
	Copy	Adjust copy density. **Value: -3 (Lighter), -2, -1, 0 (Normal), +1, +2, +3 (Darker)**
	Send/Box	Adjust scan density when sending or storing the data in Document Box. **Value: -3 (Lighter), -2, -1, 0 (Normal), +1, +2, +3 (Darker)**
Contrast		You can increase or decrease the overall contrast.
	Copy	Increases or decreases the overall contrast of copies. **Value: -3 (Lower), -2, -1, 0 (Normal), +1, +2, +3 (Higher)**
	Send/Box	Increases or decreases the overall contrast when documents are sent or saved in a document box. **Value: -3 (Lower), -2, -1, 0 (Normal), +1, +2, +3 (Higher)**
Background Density Adj.		Darkens or lightens overall background density adjustment.
	Copy (Auto)	Darkens or lightens overall background density adjustment during copying. **Value: -3 (Lighter), -2, -1, 0 (Normal), +1, +2, +3 (Darker)**
	Send/Box (Auto)	Darkens or lightens overall background density when sending images or storing them in the Document Box. **Value: -3 (Lighter), -2, -1, 0 (Normal), +1, +2, +3 (Darker)**
Auto Color Correction		This setting allows you to adjust the detection level used by the machine to determine whether the original is color or black and white during Auto Color Mode. Setting a lower value will result in more originals being identified as color, while a larger value will tend to increase the number of originals being identified as black and white. **Value: 1 (Color), 2, 3, 4, 5 (B & W)**
Correcting Black Line		Correct fine lines (streaks caused by contamination), which may appear on the image, when the document processor is used. **Value** **Off: No correction performed. Select this when you want to reproduce fine lines in the original more clearly than with [On (Low)].** **On (Low): Correction performed.** **On (High): Select this item if a streak remains after using [On (Low)]. The reproduction of fine lines on the original may become lighter than when using On (Low).**
Display Brightness		Set the brightness of the touch panel. **Value: 1 (Darker), 2, 3, 4, 5 (Lighter)**
Color Registration		When first installing the machine or moving it to a new location, color drift during printing may occur. Use this function to correct the color position of each of cyan, magenta and yellow to resolve color drift. Color Registration Procedure (page 10-30)

Item	Description
Calibration Cycle	Set the calibration cycle. **Value:** **Auto: Automatically sets the cycle for calibration.** **Short:: Priority is given to image quality.** **Standard: Balances image quality and print speed.** **Long: Priority is given to print speed.**
Tone Curve Adjustment	After prolonged use, or from the effects of surrounding temperature or humidity, the printed output tone may differ from the original. Perform this function to ensure consistency with the original tone. Tone Curve Adjustment (page 10-35)
Drum Refresh	Remove image blur and white dots from the printout. It takes about 3 minutes. The time required may vary depending on the operating environment and this process may take time. Drum Refresh (page 10-36) **NOTE** Drum Refresh cannot be performed while printing. Execute Drum Refresh after the printing is done.
Calibration	Adjust color drift or hue of printed image in the most appropriate color. Calibration (page 10-37)
Laser Scanner Cleaning	Remove vertical lines from the printout. Laser Scanner Cleaning (page 10-37)
Service Setting	Settings for machine maintenance and inspection. This menu is primarily used by service technicians to perform maintenance.

9 User Authentication and Accounting (User Login, Job Accounting)

This chapter explains the following topics:

Overview of User Login Administration 9-2
Enabling User Login Administration 9-3
Setting User Login Administration 9-4
Authentication Security 9-4
Adding a User (Local User List) 9-5
Changing User Properties 9-8
User Login Administration for Printing 9-12
Managing the Users to Scan Using TWAIN 9-13
Managing the Users to Scan Using WIA 9-14
Managing the Users that Send Faxes from a PC 9-15
Local Authorization 9-16
Group Authorization Settings 9-17
Guest Authorization Set. 9-20
Obtain NW User Property 9-23
Simple Login Settings 9-25
ID Card Settings 9-28
PIN Login Settings 9-29
Using User Login Administration 9-30
Login/Logout 9-30
Overview of Job Accounting 9-31
Enabling Job Accounting 9-32
Job Accounting Access 9-33
Setting an Account 9-34
Adding an Account 9-34
Restricting the Use of the Machine 9-35
Editing an Account 9-36
Deleting an Account 9-37
Job Accounting for Printing 9-38
Job Accounting for Scan Using TWAIN 9-39
Job Accounting for Scan Using WIA 9-40
Job Accounting for the FAX Transmitted from a Computer 9-41
Configuring Job Accounting 9-42
Default Setting 9-42
Counting the Number of Pages Printed 9-43
Print Accounting Report 9-44
Using Job Accounting 9-45
Login/Logout 9-45
Unknown ID Job 9-46

Overview of User Login Administration

User login administration specifies how the user access is administered on this machine. Enter a correct login user name and password for user authentication to login.

1 Enable User Login Administration (page 9-3)

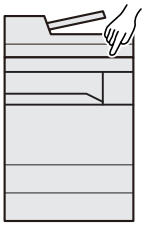

2 Set the user (page 9-5)

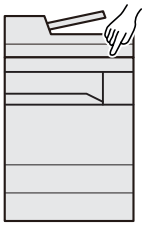

3 Enter the login user name and password and execute the job (page 9-30)

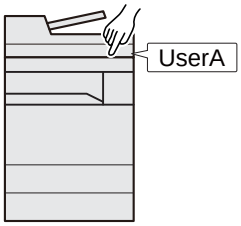

Access are in three levels - "User", "Administrator", and "Machine Administrator". The security levels can be modified only by the "Machine Administrator".

Managing the Job Account from PC

In addition to the above settings, the following are necessary to manage the job account from PC.

To Manage the Users to Print from PCs

Printer driver settings are necessary to manage the users that print on the machine from PCs.

1 Set the User Login Administration on the printer driver (page 9-12)

2 Print

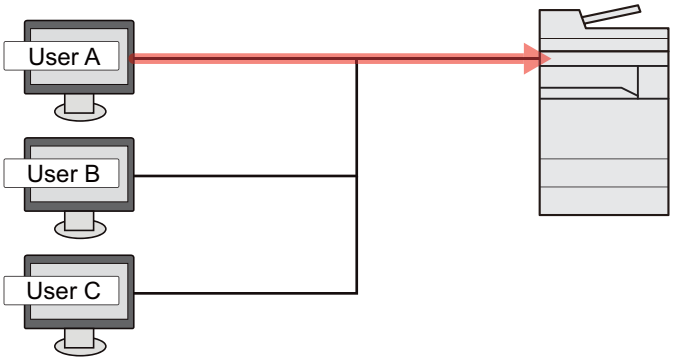

Managing the Users to Use TWAIN for Scanning

TWAIN driver settings on the PC are necessary to manage the users that use TWAIN for scanning.

Managing the Users to Scan Using TWAIN (page 9-13)

Managing the Users to Use WIA for Scanning

WIA driver settings on the PC are necessary to manage the users that use WIA for scanning.

Managing the Users to Scan Using WIA (page 9-14)

Managing the Users to Send Faxes from a PC

FAX driver settings on the PC are necessary to manage the users that send faxes from a PC.

Managing the Users that Send Faxes from a PC (page 9-15)

The optional FAX Kit is required in order to make use of fax functionality.

Enabling User Login Administration

This enables user login administration. Select one of the following authentication methods:

Item	Descriptions
Local Authentication	User authentication based on user properties on the local user list stored in the machine.
Network Authentication	User authentication based on Authentication Server. Use a user property stored in Authentication Server to access the network authentication login page.

1 Display the screen.

1 [**System Menu/Counter**] key > [**User Login/Job Accounting**]

NOTE

If the user authentication screen appears, enter your login user name and login password and select [**Login**]. For this, you need to login with administrator privileges. The factory default login user name and login password are set as shown below.

Login User Name: **3000**

Login Password: **3000**

2 [**User Login Setting**] > [**User Login**]

2 Configure the settings.

1 Select [**Local Authentication**] or [**Network Authentication**].

Select [**Off**] to disable user login administration.

If you select [**Network Authentication**], enter the host name (64 characters or less) and domain name (256 characters or less) for the Authentication Server. Select [**NTLM**], [**Kerberos**] or [**Ext.**] as the server type.

When selecting [**Ext.**] as the server type, enter the port number.

NOTE

- Selecting [**Domain**] displays the domain registration list.
- Enter the domain name. Up to 10 domain names can be registered.

2 "Do you want to add a new function to the home screen?" screen appears.To display a new function on the Home screen, select [**Yes**] and specify the position in which you want to display the icon of registered function.

Available Functions to Display on Desktop (page 2-14)

NOTE

If the login user name and password are rejected, check the following settings.

- Network Authentication setting of the machine
- User property of the Authentication Server
- Date and time setting of the machine and the Authentication Server

If you cannot login because of the setting of the machine, login with any administrator registered in the local user list and correct the settings.

Setting User Login Administration

This registers, alters and deletes users and configures the settings for User Login Administration.

Authentication Security

If user authentication is enabled, configure the user authentication settings.

User Account Lockout Setting

You can prohibit the use of a user account if an incorrect password is entered repeatedly to login with that account.

1 Display the screen.

1 [**System Menu/Counter**] key > [**User Login/Job Accounting**]

NOTE

If the user authentication screen appears, enter your login user name and login password and select [**Login**]. For this, you need to login with administrator privileges. The factory default login user name and login password are set as shown below.

Login User Name: **3000**

Login Password: **3000**

2 [**User Login Setting**] > [**User Account Lockout Settings**]

2 Configure the settings.

The following settings can be selected.

Item	Descriptions
Lockout	Select whether or not account lockout policy is enabled. **Value: Off, On**
Lockout Policy	Specify the conditions and the extent to which the account lockout is applied. **Value** **Number of Retries until Locked:** **Specify how many login retries are allowed until the account is locked out. (1 to 10 times)** **Lockout Duration:** **Specify how long the account is to be locked out until it is unlocked. (1 to 60 minutes)** **Lockout Target** **Specify the extent to which the account lockout is applied. You can select from [All] or [Remote Login Only]. Remote Login Only locks out all operations from outside the operation panel.**
Locked out Users List	Displays a list of locked out users. You can unlock a user by selecting the user in the list, and selecting [**Unlock**]. **NOTE** This function is displayed when account lockout policy is enabled.

Adding a User (Local User List)

This adds a new user. You can add up to 100 users (including the default login user name).

NOTE

By default, one of each default user with machine administrator rights and administrator privileges is already stored. Each user's properties are:

Machine Administrator

User Name: DeviceAdmin

Login User Name: 3000

Login Password: 3000

Access Level: Machine Administrator

Administrator

User Name: Admin

Login User Name: Admin

Login Password: Admin

Access Level: Administrator

* Upper case and lower case letters are distinguished (case sensitive).

It is recommended to periodically change the user name, login user name and login password regularly for your security.

1 Display the screen.

1 [**System Menu/Counter**] key > [**User Login/Job Accounting**]

NOTE

If the user authentication screen appears, enter your login user name and login password and select [**Login**]. For this, you need to login with administrator privileges. The factory default login user name and login password are set as shown below.

Login User Name: 3000

Login Password: 3000

2 [**User Login Setting**] > [**Local User List**] > [➕]

2 Enter the user information.

Select [**Next**].

The table below explains the user information to be registered.

Item	Descriptions
User Name	Enter the name displayed on the user list (up to 32 characters).
Login User Name	Enter the login user name to login (up to 64 characters). The same login user name cannot be registered.
Access Level	Select "Administrator" or "User" for user access privileges.

NOTE

For details on entering characters, refer to the following:

Character Entry Method (page 11-8)

3 Check the user information.

Change or add information as needed.

Item	Descriptions
User Name[*1]	Enter the name displayed on the user list (up to 32 characters).
Login User Name[*1]	Enter the login user name to login (up to 64 characters). The same login user name cannot be registered.
Login Password	Enter the password to login (up to 64 characters). Reenter the same password for confirmation and select the [**OK**] key.
Account Name	Add an account where the user belongs. The user, who registered his/her account name, can login without entering the account ID. Overview of Job Accounting (page 9-31) **NOTE** Select [**Menu**] > [**Search (Name)**] or [**Search (ID)**] to search by account name or account ID. Select [**Menu**] > [**Sort (Name)**] or [**Sort (ID)**] to sort the account list.
E-mail Address	The user can register his/her E-mail address. The registered address will be automatically selected for subsequent operations that need any E-mail function.
Access Level[*1]	Select "Administrator" or "User" for user access privileges.
ID Card Information	Register ID card information. Place the ID card on the ID card reader, and select [**Read**]. **NOTE** This function is displayed when the optional ID Card Authentication Kit is activated. Optional Applications (page 11-6)

*1 Mandatory at user registration.

Item	Descriptions
My Panel	You can register the language selection, initial screen, and shortcut settings for each user. Settings registered here can be applied simply by logging in.
Local Authorization[*1]	Set usage authority for each user. The following restriction items are available: **Printer:** Select whether or not use of the print function of the printer is prohibited. **Printer (Full Color):** Select whether or not to reject usage of full-color print functions for the printer. **Copy:** Select whether or not use of the copy print function is prohibited. **Copy (Full Color):** Select whether or not to reject usage of full-color print functions for copies. **Copy (Single Color):** Select whether or not to reject usage of single-color print functions for copies. **Duplex Restriction:** Select whether only duplex printing is allowed. **Combine Restrict.:** Specify whether only Combine is allowed. **EcoPrint Restriction:** Specify whether only EcoPrint is allowed. **Send:** Select whether or not use of the send function is prohibited. **FAX Transmission**[*2]**:** Select whether or not use of the fax send function is prohibited. **Storing in Box:** Select whether or not use of the box store function is prohibited. **Storing in Memory:** Select whether or not use of the removable memory store function is prohibited.

*1 Displayed when Local Authorization is enabled.
Local Authorization (page 9-16)
*2 Displayed only when the optional FAX Kit is installed.

NOTE
For details on entering characters, refer to the following:

Character Entry Method (page 11-8)

4 Select [Save].

A new user is added on the local user list.

NOTE
If simple login is enabled, a confirmation screen appears when new registration is finished asking if you will configure simple login settings. To configure simple login settings, select [**Yes**]. If you select [**No**], you will return to the user list screen.

For the procedure for configuring simple login settings, refer to the following:

Simple Login Settings (page 9-25)

Changing User Properties

User properties can be changed. Types of user properties that could be changed may be different depending on user access privilege.

NOTE

To change the user information of the machine administrator, you must log in with machine administrator authority. You can only view user information if you log in as a regular user.

The factory default login user name and login password are set as shown below.

Login User Name: **3000**

Login Password: **3000**

For a user with administrator rights who logs in

User properties can be changed and users can be deleted. The items, which can be added, are all able to be changed.

1 Display the screen.

1 [**System Menu/Counter**] key > [**User Login/Job Accounting**]

NOTE

If the user authentication screen appears, enter your login user name and login password and select [**Login**]. For this, you need to login with administrator privileges. The factory default login user name and login password are set as shown below.

Login User Name: **3000**

Login Password: **3000**

2 **[User Login Setting]** > **[Local User List]**

2 Change the user properties.

Changing user properties

1 Select [ ] for the user to edit.

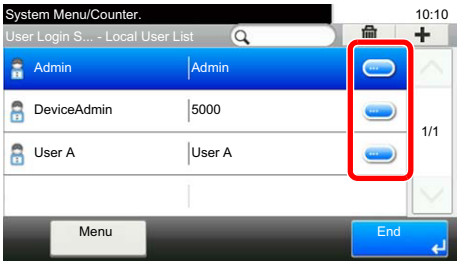

NOTE

- To sort the user list, select [**Menu**] > [**Sort (User Name)**] and [**Sort (Login User Name)**].
- To search by name or login user name, select [**Menu**] > [**Search (User Name)**] or [**Search (Login User Name)**].

2 Refer to step 3 of "Adding a User (Local User List)" to change a user property.

Adding a User (Local User List) (page 9-5)

3 [**Save**] > [**Yes**]

The user information is changed.

Deleting a user

1 Select the user to delete.

2 [ ] > [**Yes**]

The selected user will be deleted.

> **NOTE**
> The default user with machine administrator rights cannot be deleted.

To change the user information of logged in user (User Property)

These users can partially change their own user properties including user name, login password, E-mail address, and Simple Login.

Although "Login User Name", "Access Level", or "Account Name" cannot be changed, the users can check the present status.

1 Display the screen.

[**System Menu/Counter**] key > [**User Property**]

2 Change the user properties.

1 Refer to step 3 of "Adding a User (Local User List)" to change a user property.

Adding a User (Local User List) (page 9-5)

Item	Description
User Name	Changes the name shown on the user list. Up to 32 characters can be entered.
Login User Name	Displays the login user name that is entered at login.
Login Password	Changes the password that is entered at login. Up to 64 characters can be entered.
Access Level	Displays the user's access level.
Account Name	Displays the account where the user belongs.
E-mail Address	Changes the user's e-mail address. Up to 128 characters can be entered. If you log in as a user and [**New Destination Entry**] is set to [**Prohibit**], you can only check the e-mail address.
Authorization Rules	Displays the usage restriction that is set for the logged in user. **NOTE** [**Job Accounting**] shows the account name set for the logged in user and the usage restrictions that are set for that account. This function appears when job accounting is set to [**On**]. For information on job accounting, refer to the following: Job Accounting Access (page 9-33)
ID Card Information	Displays the ID card information of the logged in user. **NOTE** This function is displayed when the optional ID Card Authentication Kit is activated. Optional Applications (page 11-6) This function does not appear when the server type is set to [**Ext.**] in Network Authentication, and logged in with the user account certificated in the server specified as the [**Ext.**] server type.

Item	Description
Simple Login	When simple login is enabled, changes associated settings. **NOTE** This function does not appear when Simple Login is set to [**Off**] or the user is not registered in Simple Login.
My Panel	Register the language, default screen and shortcut for each user. Once registered, the setting will be applied simply by login. Network users are not displayed.

2 Select [**Save**].

The user information is changed.

User Login Administration for Printing

It is possible to manage the users that print on this machine from a PC.

Setting Printer Driver

To manage the users that print on this machine from a PC, the following settings are necessary in the printer driver.

1 Display the screen.

1 Click [**Start**] button on the Windows, and then click [**Devices and Printers**].

> **NOTE**
> In Windows 8, select [**Settings**] in charms on Desktop, and select [**Control Panel**], and then [**Devices and Printers**].

2 Right-click the printer driver icon of the machine, and click the [**Printer properties**] menu of the printer driver.

3 Click [**Administrator**] on the [**Device Settings**] tab.

2 Configure the settings.

1 Select [**User Login**] on the [**User Login**] tab.

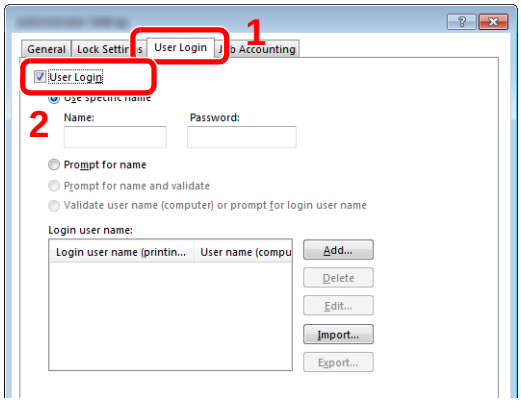

2 Set the User Login Administration.

[**Use specific name**]: This option can be used to specify a user name and password to use the same User login for every print job. If this option is selected, the user does not have to type the name and password for each print job.

[**Prompt for name**]: A screen for entering the user name and password will be displayed when attempting a printing. The user name and password must be entered each time a printing is attempted.

[**Prompt for name and validate**]: A screen for entering the user name and password will be displayed when attempting a printing. The user name and password stored in the Login user name list needs to be entered. The user name and password must be entered each time a printing is attempted.

[**Validate user name (computer) or prompt for login user name**]: When printing, the Windows user name is searched in the "Login user names" and printing is possible if the name is registered. If the name is not registered, the printing will be canceled for users with only user authority. If the user has administrator privileges, the screen to enter the user name and password will appear.

3 Click [**OK**].

NOTE

For other settings of job accounting, refer to the following:

Printer Driver User Guide

Managing the Users to Scan Using TWAIN

It is possible to manage the users that scan using TWAIN.

Setting TWAIN Driver

To manage the users that scan using TWAIN, the following settings are necessary in the TWAIN driver.

1 Display the screen.

1 Select [**Start**] button on the Windows, [**All Programs**], [**Kyocera**] and then [**TWAIN Driver Setting**].

TWAIN Driver screen appears.

NOTE

In Windows 8, select [**Search**] in charms, [**Apps**], and then [**TWAIN Driver Setting**].

2 Select the machine,and click [**Edit**].

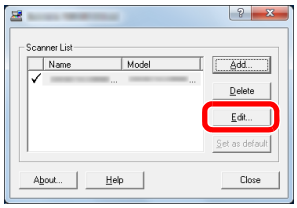

2 Configure the settings.

1 Click [**User Authentication Settings**].

2 Select the checkbox beside [**Authentication**], and enter Login User Name and Password.



3 Click [**OK**].

Managing the Users to Scan Using WIA

It is possible to manage the users that scan using WIA.

Setting WIA Driver

To manage the users that scan using WIA, the following settings are necessary in the WIA driver.

1 Display the screen.

1 Click [**Start**] button on the Windows and enter [**Scanner**] in [**Program and File Search**]. Click [**View scanners and cameras**] in the search list then the Scanners and Cameras screen appears.

> **NOTE**
> In Windows 8, click [**Search**] in charms, and then [**Settings**], and enter "Scanner" in the search box. Click [**View scanners and cameras**] in the search list then the Scanners and Cameras screen appears.

2 Select the same name as this machine from WIA Drivers, and press [**Properties**].

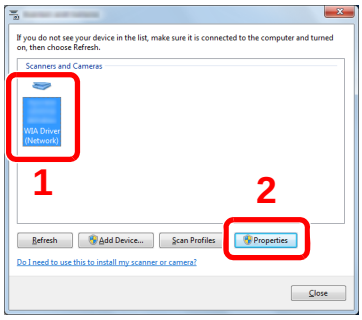

2 Configure the settings.

1 Select the checkbox beside [**Authentication**] on the [**Settings**] tab, and enter Login User Name and Password.

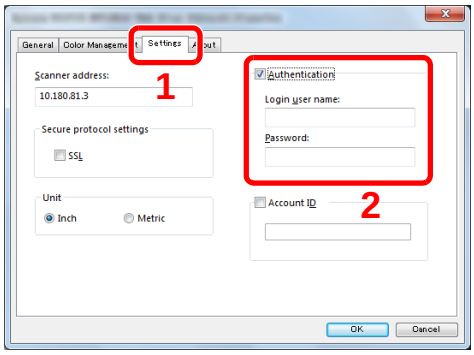

2 Click [**OK**].

Managing the Users that Send Faxes from a PC

It is possible to manage the users that send faxes from a PC.

Setting FAX Driver

To manage the users that send faxes from a PC, the following settings are necessary in the FAX driver.

1 Display the screen.

1 Click [**Start**] button on the Windows, and then click [**Devices and Printers**].

> **NOTE**
> In Windows 8, select [**Settings**] in charms on Desktop, and select [**Control Panel**], and then [**Devices and Printers**].

2 Right-click the printer driver icon of the machine, and click the [**Printer properties**] menu of the printer driver.

3 Click [**FAX TX Setting**] on the [**Printing Preferences**] window.

2 Configure the settings.

1 Select [**User Login**] on the [**Authentication**] tab.

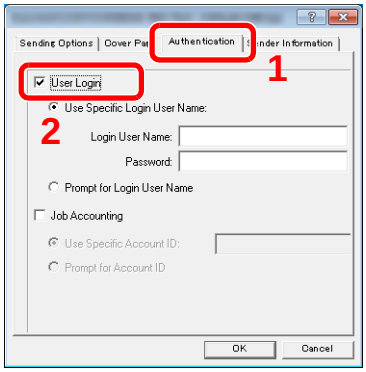

2 Set the User Login Administration.

[**Use Specific Login User Name**]: This option can be used to specify a user name and password to use the same User login for every FAX job. If this option is selected, the user does not have to type the name and password for each FAX job.

[**Prompt for Login User Name**]: A screen for entering the user name and password will be displayed when attempting a transmission. The user name and password must be entered each time a transmission is attempted.

3 Click [**OK**].

Local Authorization

Select whether or not to use Local Authorization.

NOTE

When using Local Authorization, the user authentication type must be set to [**Local Authentication**].

Enabling User Login Administration (page 9-3)

1 Display the screen.

1 [**System Menu/Counter**] key > [**User Login/Job Accounting**]

NOTE

If the user authentication screen appears, enter your login user name and login password and select [**Login**]. For this, you need to login with administrator privileges. The factory default login user name and login password are set as shown below.

Login User Name: **3000**

Login Password: **3000**

2 [**User Login Setting**] > [**Local User Authorization**]

2 Select [Off] or [On].

Group Authorization Settings

Set restrictions of the machine usage by each individual group registered in the authentication server.

NOTE

To use the group authorization settings, [**Network Authentication**] must be selected for the authentication method in "Enabling User Login Administration". Select "On" for "LDAP" in "Protocol Detail".

Enabling User Login Administration (page 9-3)
Protocol Detail (page 8-31)

Group Authorization

Use the group authorization.

1 Display the screen.

1 [**System Menu/Counter**] key > [**User Login/Job Accounting**]

NOTE

If the user authentication screen appears, enter your login user name and login password and select [**Login**]. For this, you need to login with administrator privileges. The factory default login user name and login password are set as shown below.

Login User Name: **3000**

Login Password: **3000**

2 [**User Login Setting**] > [**Group Authorization Set.**] > [**Group Authorization**]

2 Select [On].

Group List (Up to 20)

Register the groups that are restricted the machine usage. Other users and groups belong to "Others".

The table below explains the group information to be registered.

Item	Descriptions
Group ID[*1]	Enter the ID displayed on the group list (between 1 and 4294967295).
Group Name	Enter the name displayed on the group list (up to 32 characters).
Access Level	Select [**Administrator**] or [**User**] for group access privileges.
Printer	Select whether or not to reject usage of print functions for the printer.
Printer (Full Color)	Select whether or not to reject usage of color print functions for the printer.
Copy	Select whether or not to reject usage of copy functions.
Copy (Full Color)	Select whether or not to reject usage of only full-color print functions for copies.
Copy (Color)	Select whether or not to reject usage of only color print functions for copies.
Duplex Restriction	Select whether only duplex printing is allowed.
Combine Restrict.	Specify whether only Combine is allowed.
EcoPrint Restriction	Specify whether only EcoPrint is allowed.
Send	Select whether or not to reject usage of the send functions.
FAX Transmission[*2]	Select whether or not to reject usage of the FAX transmissions.
Storing in Box	Select whether or not to reject usage of storing in the document boxes.
Storing in Memory	Select whether or not to reject usage of storing in the removable memory.

*1 For "Group ID", specify PrimaryGroupID assigned by Active Directory of Windows. If you are using Windows Server 2008, check Attribute Editor tab of user properties. If you are using Windows Server 2000/2003, check ADSIEdit. ADSIEdit is a support tool included on the installation DVD for Windows Server OS (under \SUPPORT\TOOLS).

*2 Displayed only when the optional FAX Kit is installed.

1 Display the screen.

1 [**System Menu/Counter**] key > [**User Login/Job Accounting**]

NOTE

If the user authentication screen appears, enter your login user name and login password and select [**Login**]. For this, you need to login with administrator privileges. The factory default login user name and login password are set as shown below.

Login User Name: **3000**

Login Password: **3000**

2 [**User Login Setting**] > [**Group Authorization**] > [**Group List**] > [➕]



2 Configure the settings.

1 Enter the group ID > [**Next**]

2 Enter the group name > [**Next**]

NOTE

For details on entering characters, refer to the following:

Character Entry Method (page 11-8)

3 Select the group access privileges > [**Next**]

4 Check the settings and change or add information as needed.

3 Register the group.

Select [**Save**].

A new group is added on the group list.

Guest Authorization Set.

When User Login Administration is enabled, set the functions that guest users who cannot log in to the machine are allowed to use.

NOTE

To use Guest Authorization Set., User Login Administration must be enabled in "Enabling User Login Administration".

Enabling User Login Administration (page 9-3)

Enabling Guest Authorization

Enable the guest authorization.

1 Display the screen.

1 [**System Menu/Counter**] key > [**User Login/Job Accounting**]

NOTE

If the user authentication screen appears, enter your login user name and login password and select [**Login**]. For this, you need to login with administrator privileges. The factory default login user name and login password are set as shown below.

Login User Name: **3000**

Login Password: **3000**

2 [**User Login Setting**] > [**Guest Authorization Set.**] > [**Guest Authorization**]

2 Select [On].

NOTE

If the guest authorization setting is enabled, the [**Authentication/Logout**] key must be selected when logging in.

In the guest user default settings, only monochrome copying can be used. If you wish to use a different function, log in as a user who can use that function, or change the settings in the guest properties.

Configuring Guest Property

Register guest user information and functions that are restricted.

The table below explains the user information to be registered.

Item	Descriptions
User Name	Enter the name displayed on the user list (up to 32 characters). The default setting is "Guest User".
Access Level	The authority of the user appears. This cannot be changed.
Account Name	Add an account where the user belongs. If the user does not belong to any account, select [**Other**].
Authorization Rules	Set usage authority for each user. The items you can restrict the access level with are as follows. **Printer:** Select whether or not use of the print function of the printer is prohibited. **Printer (Full Color):** Select whether or not use of the print function (color) of the printer is prohibited. **Copy:** Select whether or not use of the copy print function is prohibited. **Copy (Full Color):** Select whether or not use of the copy print function (full color) is prohibited. **Copy (Single Color):** Select whether or not use of the copy print function (single color) is prohibited. **Duplex Restriction:** Select whether only duplex printing is allowed. **Combine Restrict.:** Specify whether only Combine is allowed. **EcoPrint Restriction:** Specify whether only EcoPrint is allowed. **Send:** Select whether or not use of the send function is prohibited. **FAX TX Restriction*1:** Select whether or not use of the fax send function is prohibited. **Storing in Box:** Select whether or not use of the box store function is prohibited. **Storing in Memory:** Select whether or not use of the removable memory store function is prohibited.

*1 Displayed only when the optional FAX Kit is installed.

1 Display the screen.

1 [**System Menu/Counter**] key > [**User Login/Job Accounting**]

> **NOTE**
>
> If the user authentication screen appears, enter your login user name and login password and select [**Login**]. For this, you need to login with administrator privileges. The factory default login user name and login password are set as shown below.
>
> **Login User Name:** **3000**
>
> **Login Password:** **3000**

2 [**User Login Setting**] > [**Guest Authorization Set.**] > [**Guest Property**]

2 Configure the settings.

Check the settings and change or add information as needed.

3 Register the group.

Select [**Save**].

Obtain NW User Property

Set the required information to obtain the network user property from the LDAP server. The user name and E-mail address obtained with this setting is shown in the user information, the status confirmation screen, and the header of E-mail.

NOTE

To obtain the network user property from the LDAP server, [**Network Authentication**] must be selected for the authentication method in "Enabling User Login Administration". Select "On" for "LDAP" in "Protocol Detail".

Enabling User Login Administration (page 9-3)
Protocol Detail (page 8-31)

The table below explains the required information to be registered.

Item	Descriptions
Server Name[*1]	Enter the LDAP server name or the IP address (up to 64 characters). If a server name is not entered, user information will be acquired from the server set for Network Authentication.
Port	Port number for LDAP server. The default port number is 389.
Name 1[*2]	Enter the LDAP Attribute to obtain the user name to be displayed from the LDAP server (up to 32 characters).
Name 2[*3]	Enter the LDAP Attribute to obtain the user name to be displayed from the LDAP server (up to 32 characters).
E-mail Address[*4]	Enter the LDAP Attribute to obtain the E-mail address from the LDAP server (up to 32 characters).
Authentic at Type[*5]	Set the authentication method. Select [**Simple**] or [**SASL**]. After changing the setting, restart the system or turn the power off and then on.
Search Timeout	Set the amount of time to wait before time-out in seconds (from 5 to 255 seconds).

*1 If using Active Directory of Windows, the server name may be the same as the server name entered in the network authentication.
*2 If using Active Directory of Windows, displayName of Attribute may be used as "Name 1".
*3 "Name 2" can be left out. When you assign displayName in "Name 1" and department in "Name 2", and if the value of displayName is "Mike Smith" and the value of department is "Sales" in Active Directory of Windows, the user name appears as "Mike Smith Sales".
*4 If using Active Directory of Windows, mail of Attribute may be used as E-mail Address.
*5 Appears when the server type is set to "Kerberos" in "Network Authentication".

1 Display the screen.

1 [**System Menu/Counter**] key > [**User Login/Job Accounting**]

NOTE

If the user authentication screen appears, enter your login user name and login password and select [**Login**]. For this, you need to login with administrator privileges. The factory default login user name and login password are set as shown below.

Login User Name: **3000**

Login Password: **3000**

2 [**User Login Setting**] > [**Obtain NW User Property**] > [**On**]

2 Configure the settings.

1 [**Server Name**] > Enter the LDAP server name or the IP address > [**OK**]

2 [**Port**] > Enter the LDAP port number > [**OK**]

3 [**Name 1**] > Enter the LDAP Attribute to obtain the user name to be displayed > [**OK**]

4 Similar to steps 3, set [**Name 2**].

5 If you set the server type to "Kerberos", select [**Authentication Type**] and set the authentication method.

6 [**E-mail Address**] > Enter the LDAP Attribute to obtain the E-mail address > [**OK**]

7 Select [**Search Timeout**] to set the amount of time to wait before time-out.

8 Select [**+**], [**-**] or the numeric keys to enter the time > [**OK**] > [**OK**]

Simple Login Settings

The simple login function allows users to log in simply by selecting a user name. Users must be registered in advance to use this functionality.

NOTE

- For user registration, refer to the following:

Adding a User (Local User List) (page 9-5)

- To use Simple Login, User Login Administration must be enabled in "Enabling User Login Administration".

Enabling User Login Administration (page 9-3)

- When the guest authorization setting is enabled, the Simple Login screen is not displayed.

Enabling Simple Login

Select whether or not simple login is enabled.

1 Display the screen.

1 [**System Menu/Counter**] key > [**User Login/Job Accounting**]

NOTE

If the user authentication screen appears, enter your login user name and login password and select [**Login**]. For this, you need to login with administrator privileges. The factory default login user name and login password are set as shown below.

Login User Name: **3000**

Login Password: **3000**

2 [**User Login Setting**] > [**Simple Login Settings**] > [**Simple Login**]

2 Select [On] or [Off].

Simple Login Setup

Register users to use simple login. You can add up to 20 users.

1 Display the screen.

1 [**System Menu/Counter**] key > [**User Login/Job Accounting**]

NOTE

If the user authentication screen appears, enter your login user name and login password and select [**Login**]. For this, you need to login with administrator privileges. The factory default login user name and login password are set as shown below.

Login User Name: **3000**

Login Password: **3000**

2 [**User Login Setting**] > [**Simple Login Settings**] > [**Simple Login Setup**]

2 Enter the user information.

1 Select the key to which you want to register a user.

2 Select [+].

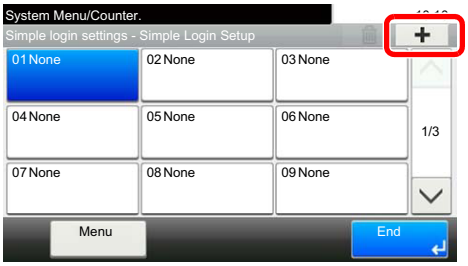

3 To specify the user from local users, select [**Local User**]. To specify from network users, select [**Network User**].

The procedure differs depending on the transmission method selected.

Specifying the user from local users

Select the user to be set for simple login.

NOTE

- To sort the user list, select [**Menu**] > [**Sort (Name)**] and [**Sort (Login User Name)**].
- To search by name or login user name, select [**Menu**] > [**Search (Name)**] or [**Search (Login User Name)**].

Specifying the user from network users

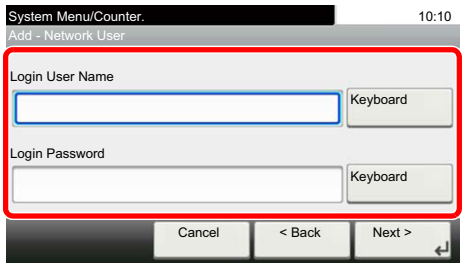

Select [**Keyboard**] for "Login User Name" and "Login Password", enter the information of the user to be registered, and select [**OK**].

If you are specifying a user for whom a domain is set in network authentication, select the "Domain" and select the domain where the user is registered.

Select [**Next**].

NOTE

For details on entering characters, refer to the following:

Character Entry Method (page 11-8)

4 Enter the user name to be displayed, and select [**OK**].

NOTE

For details on entering characters, refer to the following:

Character Entry Method (page 11-8)

5 [**Password Login**] > [**On**] or [**Off**] > [**Icon**]

6 Select the user icon to be displayed and select [**OK**].

3 Register the user.

Select [**Save**].

ID Card Settings

If ID card authentication is enabled, select the authentication type.

NOTE

This functions appears when the Card Authentication kit is activated.

Optional Applications (page 11-6)

1 Display the screen.

1 [**System Menu/Counter**] key > [**User Login/Job Accounting**]

NOTE

If the user authentication screen appears, enter your login user name and login password and select [**Login**]. For this, you need to login with administrator privileges. The factory default login user name and login password are set as shown below.

Login User Name: **3000**

Login Password: **3000**

2 [**User Login Setting**] > [**ID Card Settings**]

2 Configure the settings.

The following settings can be selected.

Item	Descriptions
Keyboard Login	When ID card authentication is enabled, select whether or not login by keyboard is allowed. **Value: Permit, Prohibit**
Additional Authentication*1	Select whether or not to require password entry after authenticating by ID card. **Value: Off, Use Password**

*1 This function does not appear when the server type is set to [**NTLM**] or [**Kerberos**] in "Network Authentication".

PIN Login Settings

This sets whether or not to login using PIN.

NOTE

This setting is only displayed when [**Network Authentication**] must be selected for the authentication method and the server type is set to [**Ext.**] in "Network Authentication".

Optional Applications (page 11-6)

1 Display the screen.

1 [**System Menu/Counter**] key > [**User Login/Job Accounting**]

NOTE

If the user authentication screen appears, enter your login user name and login password and select [**Login**]. For this, you need to login with administrator privileges. The factory default login user name and login password are set as shown below.

Login User Name: **3000**

Login Password: **3000**

2 Selet [**PIN Login**].

2 Configure the settings

1 Select [**Off**] or [**On**].

2 Select [**OK**].

Using User Login Administration

This section explains procedures while setting job accounting.

Login/Logout

If user login administration is enabled, the login user name and login password entry screen appears each time you use this machine.
Use the procedure below to login and logout.

Login

If the login user name entry screen appears during operations, log in by referring to the following:

Login (page 2-21)

Logout

When the operations are complete, select the [**Authentication/Logout**] key to return to the login user name and login password entry screen.

Overview of Job Accounting

Job accounting manages the copy/print/scan/FAX count accumulated by individual accounts by assigning an ID to each account.

1 Enable job accounting. (page 9-32)

2 Setting an account. (page 9-34)

3 Enter the assigned account ID when performing the job. (page 9-30)

4 Count the number of pages copied, printed, scanned and faxed.

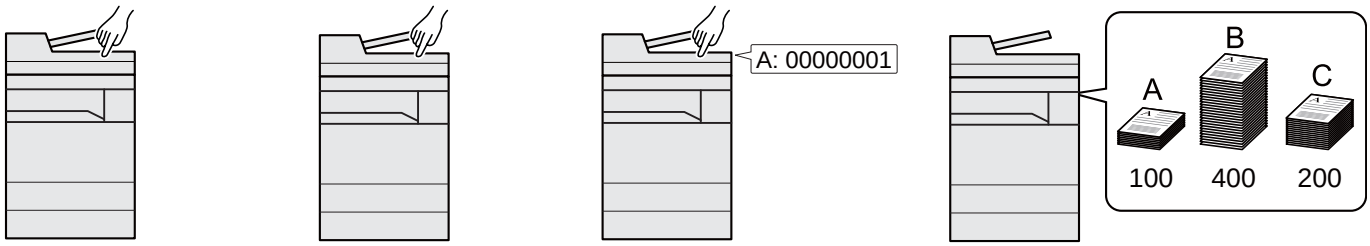

To Manage the Number of Sheets Used on Jobs Printed from a PC

To manage the number of jobs to be printed from the PC on the network, you need to configure settings by using the printer driver on the PC.

1 Set Job Accounting for the PC on the network by using the printer driver. (page 9-38)

2 Execute printing.

3 Count the number of pages printed.

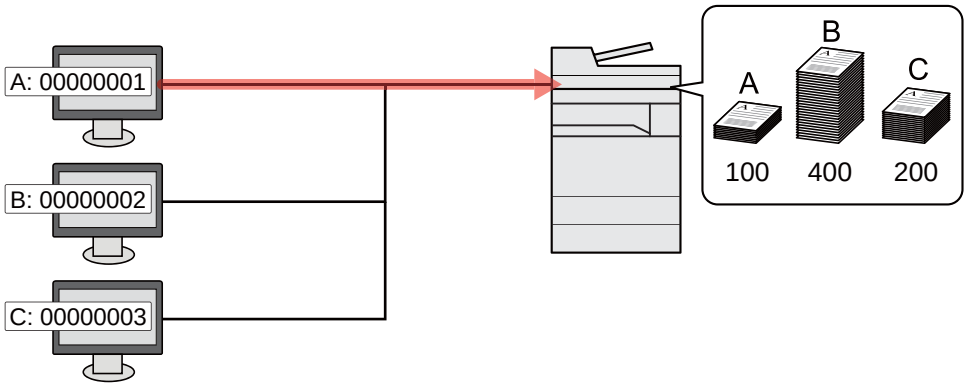

Managing the Scan Job Account by Using TWAIN

To manage the scan job account by using TWAIN, you need to configure the TWAIN driver settings on the computer connected to the machine.

Job Accounting for Scan Using TWAIN (page 9-39)

Managing the Scan Job Account by Using WIA

To manage the scan job account by using WIA, you need to configure the WIA driver settings on the computer connected to the machine.

Job Accounting for Scan Using WIA (page 9-40)

Managing the FAX Job Transmitted from a PC

To manage the number of FAX jobs transmitted from the PC, you need to configure the settings by using the FAX Driver on the PC.

Job Accounting for the FAX Transmitted from a Computer (page 9-41)

The optional FAX Kit is required in order to make use of fax functionality.

Enabling Job Accounting

Enable job accounting. Use the procedure below.

1 Display the screen.

1 [**System Menu/Counter**] key > [**User Login/Job Accounting**]

> **NOTE**
>
> If the user authentication screen appears, enter your login user name and login password and select [**Login**]. For this, you need to login with administrator privileges. The factory default login user name and login password are set as shown below.
>
> **Login User Name:** **3000**
>
> **Login Password:** **3000**

2 [**Job Accounting Settings**] > [**Job Accounting**]

2 Select [On].

> **NOTE**
>
> - To disable job accounting, select [**Off**].
> - When the display returns to System Menu default screen, logout is automatically executed and the screen to enter the Account ID appears. To continue the operation, enter the Account ID.

Job Accounting Access

Set the job accounting access.

1 Display the screen.

1 [**System Menu/Counter**] key > [**User Login/Job Accounting**]

> **NOTE**
>
> If the user authentication screen appears, enter your login user name and login password and select [**Login**]. For this, you need to login with administrator privileges. The factory default login user name and login password are set as shown below.
>
> **Login User Name:** **3000**
>
> **Login Password:** **3000**

2 [**Job Accounting Settings**] > [**Job Accounting Access**]

2 Configure the settings.

Select [**Local**] or [**Network**].

Setting an Account

You can add, change and delete an account and set the restriction for each account.

Adding an Account

Up to 100 individual accounts can be added. The following entries are required.

Item	Descriptions
Account Name	Enter the account name (up to 32 characters).
Account ID	Enter the account ID as many as eight digits (between 0 and 99999999).
Restriction	This prohibits printing/scanning or restricts the number of sheets to load. ➡ Restricting the Use of the Machine (page 9-35)

1 Display the screen.

1 [**System Menu/Counter**] key > [**User Login/Job Accounting**]

> **NOTE**
> If the user authentication screen appears, enter your login user name and login password and select [**Login**]. For this, you need to login with administrator privileges. The factory default login user name and login password are set as shown below.
> **Login User Name:** **3000**
> **Login Password:** **3000**

2 [**Job Accounting Settings**] > [**Accounting List**] > [➕]

2 Enter the account information.

1 Enter the account name > [**Next**]

> **NOTE**
> For details on entering characters, refer to the following:
> ➡ Character Entry Method (page 11-8)

2 Enter the account ID > [**Next**]

> **NOTE**
> Any "Account ID" that has already registered cannot be used. Enter any other account ID.

3 Activate or deactivate restriction.

➡ Restricting the Use of the Machine (page 9-35)

4 Select [**Save**].

A new account is added on the Account List.

Restricting the Use of the Machine

This section explains how to restrict the use of the machine by account or the number of sheets available.

The items that can be restricted differ depending on whether "Individual" or "Total" is selected for "Copy/Print Count".

Copy/Print Count (page 9-42)

Restriction Items

"Individual" selected for Copy/Printer Count"Split" selected for Copy/Printer Count

Item	Descriptions
Copy (Total)	Limits the number of sheets used for copying.
Copy (Full Color)	Limits the number of pages used for full-color copying.
Copy (Single Color)	Limits the number of pages used for single-color copying.
Printer (Total)	Limits the number of sheets used for printing.
Printer (Full Color)	Limits the number of pages used for color printing.
Scan (Others)	Limits the number of sheets scanned (excludes copying).
FAX Transmission*1	Limits the number of sheets sent by fax. This is displayed only on products with the fax function installed.

*1 Displayed only when the optional FAX Kit is installed.

"Total" selected for Copy/Printer Count

Item	Descriptions
Print (Total)	Limits the total number of sheets used for copying and printing.
Print (Full Color)	Limits the number of pages used for full-color printing.
Print (Single Color)	Limits the number of pages used for single-color printing.
Scan (Others)	Limits the number of sheets scanned (excludes copying).
FAX Transmission*1	Limits the number of sheets sent by fax. This is displayed only on products with the fax function installed.

*1 Displayed only when the optional FAX Kit is installed.

Applying Restriction

Restriction can be applied in the following modes:

Item	Descriptions
Off	No restriction is applied.
Counter Limit	Restricts the print counter in one-page increments up to 9,999,999 copies.
Reject Usage	Restriction is applied.

Editing an Account

This changes the registered account information.

1 Display the screen.

1 [**System Menu/Counter**] key > [**User Login/Job Accounting**]

> **NOTE**
>
> If the user authentication screen appears, enter your login user name and login password and select [**Login**]. For this, you need to login with administrator privileges. The factory default login user name and login password are set as shown below.
>
> **Login User Name:** **3000**
>
> **Login Password:** **3000**

2 [**Job Accounting Settings**] > [**Accounting List**]

2 Edit an account.

1 Select [ ] for the account name you wish to edit.

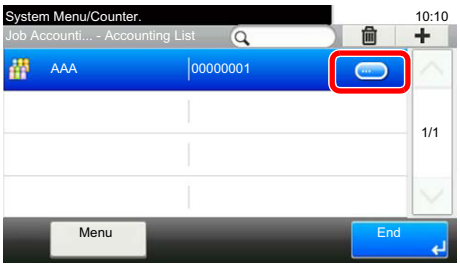

> **NOTE**
>
> - To search by name or login user name, select [**Menu**] > [**Search (Name)**] or [**Search (ID)**].
> - To sort the user list, select [**Menu**] > [**Sort (Name)**] and [**Sort (ID)**].

2 Select the account information to be changed and change the account information.

3 [**Save**] > [**Yes**]

The account information is changed.

Deleting an Account

This deletes the account.

1 Display the screen.

1 [**System Menu/Counter**] key > [**User Login/Job Accounting**]

> **NOTE**
>
> If the user authentication screen appears, enter your login user name and login password and select [**Login**]. For this, you need to login with administrator privileges. The factory default login user name and login password are set as shown below.
>
> **Login User Name:** **3000**
>
> **Login Password:** **3000**

2 [**Job Accounting Settings**] > [**Accounting List**]

2 Delete an account.

1 Select the account name you wish to delete.

2 [ ] > [**Yes**]

The account is deleted.

Job Accounting for Printing

The number of jobs to be printed from the computer can be managed by Job Accounting.

Setting Printer Driver

To manage the number of jobs to be printed from the PC on the network, you need configure the following settings by using the printer driver on the PC.

1 Display the screen.

1 Click [**Start**] button on the Windows, and then click [**Devices and Printers**].

NOTE
In Windows 8, select [**Settings**] in charms on Desktop, and select [**Control Panel**], and then [**Devices and Printers**].

2 Right-click the printer driver icon of the machine, and click the [**Printer properties**] menu of the printer driver.

3 Click [**Administrator**] on the [**Device Settings**] tab.

2 Configure the settings.

1 Select [**Job accounting**] on the [**Job Accounting**] tab.

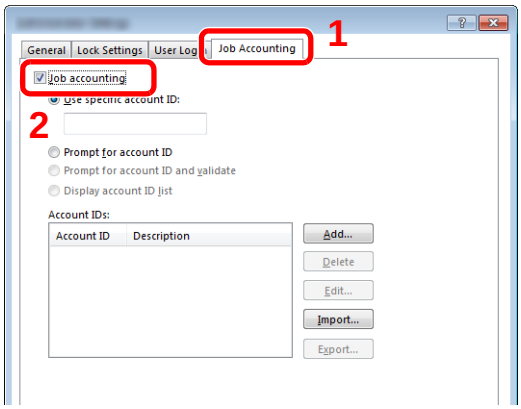

2 Set the Account ID.

[**Use specific account ID**]: Enter the Account ID. Printing will be performed using the entered Account ID. If this option is selected, the user does not have to enter the Account ID for each print job.

[**Prompt for account ID**]: A screen for entering the Account ID will be displayed when attempting a printing. The Account ID must be entered each time a printing is attempted.

[**Prompt for account ID and validate**]: A screen for entering the Account ID will be displayed when attempting a printing. The Account ID stored in the Account ID list needs to be entered. The Account ID must be entered each time a printing is attempted.

[**Display account ID list**]: The Account ID list is displayed when printing. The Account ID to be used needs to be selected from the list.

3 Click [**OK**].

NOTE
For other settings of job accounting, refer to the following:

Printer Driver User Guide

Job Accounting for Scan Using TWAIN

The number of jobs scanned by using TWAIN can be managed by Job Accounting.

Setting TWAIN Driver

To manage the number of jobs scanned by using TWAIN, you need to configure the following settings by using the TWAIN Driver on the computer.

1 Display the screen.

1 Select [**Start**] button on the Windows, [**All Programs**], [**Kyocera**] and then [**TWAIN Driver Setting**].

TWAIN Driver screen appears.

NOTE

In Windows 8, select [**Search**] in charms, [**Apps**], and then [**TWAIN Driver Setting**].

2 Select the machine, click [**Edit**].

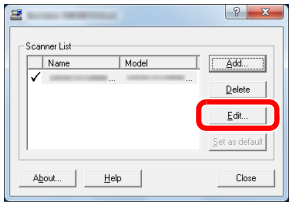

2 Configure the settings.

1 Click [**User Authentication Settings**].

2 Select the checkbox beside [**Account**], and enter the account ID.

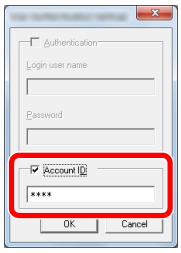

3 Click [**OK**].

Job Accounting for Scan Using WIA

The number of jobs scanned by using WIA can be managed by Job Accounting.

Setting WIA Driver

To manage the number of jobs scanned by using WIA, you need to configure the following settings by using the WIA Driver on the computer.

1 Display the screen.

1 Click [**Start**] button on the Windows and enter [**Scanner**] in [**Program and File Search**]. Click [**View scanners and cameras**] in the search list then the Scanners and Cameras screen appears.

> **NOTE**
> In Windows 8, click [**Search**] in charms, and then [**Settings**], and enter "Scanner" in the search box. Click [**View scanners and cameras**] in the search list then the Scanners and Cameras screen appears.

2 Select the same name as this machine from WIA Drivers, and press [**Properties**].

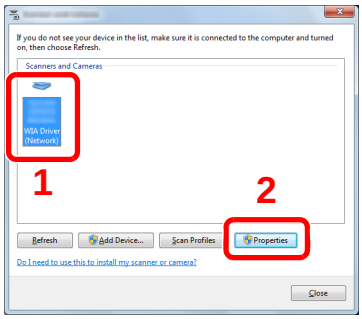

2 Configure WIA Driver.

1 Select the checkbox beside [**Account ID**] on the [**Settings**] tab, and enter the Account ID.

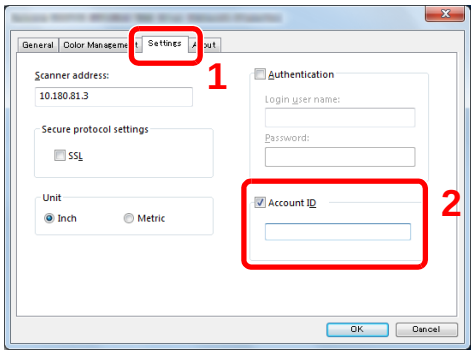

2 Click [**OK**].

Job Accounting for the FAX Transmitted from a Computer

The number of FAX jobs transmitted from the computer can be managed by Job Accounting.

NOTE

FAX functions are available only on products with the fax function installed.

Setting FAX Driver

To manage the number of FAX jobs transmitted from the computer, you need to configure the following settings by using the FAX Driver on the computer.

1 Display the screen.

1 Click [**Start**] button on the Windows, and then click [**Devices and Printers**].

NOTE

In Windows 8, select [**Settings**] in charms on Desktop, and select [**Control Panel**], and then [**Devices and Printers**].

2 Right click the name of the machine to be used as the FAX Driver and select [**Printing preferences**] from the resulting pull-down menu.

3 Click [**FAX TX Setting**] in the [**Printing Preferences**] window.

2 Configure the settings.

1 Select [**Job Accounting**] on the [**Authentication**] tab.

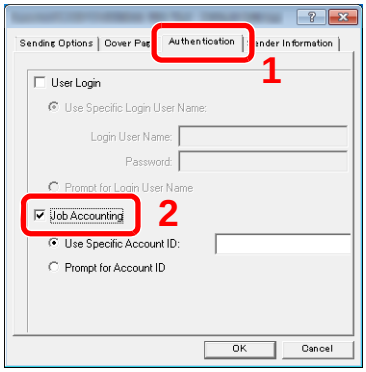

2 Set the Job Accounting.

[**Use Specific Account ID**]: This option can be used to specify an account ID to use the same Account ID for every FAX job. If this option is selected, the user does not have to enter the Account ID for each FAX job.

[**Prompt for Account ID**]: A screen for entering the Account ID will be displayed when attempting a transmission. The Account ID must be entered each time a transmission is attempted.

3 Click [**OK**].

Configuring Job Accounting

Default Setting

Set the defaults for job accounting. To configure the settings, select the item in Default Setting and select the setting item.

[**System Menu/Counter**] key > [**User Login/Job Accounting**] > [**Job Accounting Settings**] > [**Default Setting**]

For details on each function, see the table below.

Item	Description
Apply Limit	This specifies how the machine behaves when the counter has reached the limit of restriction. The table below describes the action taken. **Value** **Immediately: Job stops when the counter reaches its limit. The next job will be prohibited in sending or in storing in the box.** **Subsequently: Printing/scanning of the job continues but the subsequent job will be rejected.** **Alert Only: Job continues while displaying an alert message.**
Copy/Print Count	You can select how the copying and printing page counts are shown - either the total of both or each of copying and printing individually (Split). The selection may influence restriction on the count and count method. **Value: Total, Individual** ➡ Restricting the Use of the Machine (page 9-35) Print Accounting Report (page 9-44)
Default Counter Limit	When you add a new account, you can change the default restrictions on the number of sheets used. You can set any number from 1 to 9,999,999. The items that can be set differ depending on whether [**Individual**] or [**Total**] is selected for [**Copy/Print Count**]. ➡ Copy/Print Count (page 9-42)
[Individual] selected for Copy/Printer Count	
Copy (Total)	Sets the default restriction on the number of sheets used for copying.
Copy (Full Color)	Sets the default restriction on the number of sheets used for full-color copying.
Copy (Single Color)	Sets the default restriction on the number of sheets used for single-color copying.
Printer (Total)	Sets the default restriction on the number of sheets used for printing.
Printer (Full Color)	Sets the default restriction on the number of sheets used for color printing.
Scan (Others)	Sets the default restriction on the number of sheets used for scanning (excludes copying).
FAX Transmission*1	Sets the default restriction on the number of sheets used for sending faxes.
[Total] selected for Copy/Printer Count	
Print (Total)	Sets the default restriction on the total number of sheets used for copying and printing.
Print (Full Color)	Sets the default restriction on the number of sheets used for full-color printing.
Print (Single Color)	Sets the default restriction on the number of sheets used for single-color printing.
Scan (Others)	Sets the default restriction on the number of sheets used for scanning (excludes copying).
FAX Transmission*1	Sets the default restriction on the number of sheets used for sending faxes.

*1 Displayed only when the optional FAX Kit is installed.

Counting the Number of Pages Printed

This counts the number of pages printed. Counts are classified into Total Job Accounting and Each Job Accounting. A new count can also be started after resetting the count data which was stored for a certain period of time.

[**System Menu/Counter**] key > [**User Login/Job Accounting**] > [**Job Accounting Settings**] > [**Total Accounting**] or [**Each Job Account**]

Total Accounting

This counts the number of pages for all accounts and resets the counts for those accounts together at the same time.

Each Job Account

This counts the number of pages for each account and resets the counts by account. When checking Each Job Accounting, select the account for which you want to check the count.

Types of the counts are as follows.

Item		Descriptions
Printed Pages		Displays the number of pages copied and printed, and the total number of pages used. You can also use [**FAX**]*1, [**by Duplex**] and [**by Combine**] to check the number of pages used.
	Copy (B & W)	Displays the number of pages used for black and white copying.
	Copy (Full Color)	Displays the number of pages used for full-color copying.
	Copy (Single Color)	Displays the number of pages used for single-color copying.
	Copy (Total)	Displays the number of pages copied.
	Printer (B & W)	Displays the number of pages used for black and white printing.
	Printer (Full Color)	Displays the number of pages used for color printing.
	Printer (Total)	Displays the number of pages printed.
	Copy/Printer (B/W)	Displays the total number of pages used for black-and-white copying and printing.
	Copy/Print. (Color)	Displays the total number of pages used for full-color copying and printing.
	Copy/Print. (Total)	Displays the total number of pages used for copying and printing.
	FAX	Displays the number of pages received.
	Total	Displays the total number of pages used.
	by Duplex	Displays the number of pages printed in [**1-sided**] mode, [**2-sided**] mode, and the total pages in both modes.
	by Combine	Displays the number of pages printed in [**None**] (no Combine) mode, [**2 in 1**] mode, [**4 in 1**] mode, and the total pages in both modes.
Scanned Pages		Displays the number of pages scanned for copying, faxing and other functions, as well as the total number of pages scanned.
FAX TX Pages		Displays the number of pages faxed.
FAX TX Time		Displays the total duration of FAX transmissions.
Counter Reset		Resets the counter. Select [**Yes**] in the confirmation screen.

*1 Displayed only when the optional FAX Kit is installed.

Print Accounting Report

The total pages counted of all relevant accounts can be printed as an accounting report.

Reports have different formats depending on how the count of copiers and printers is administered.

When "Individual" is selected for Managing the Copy/Printer Count.

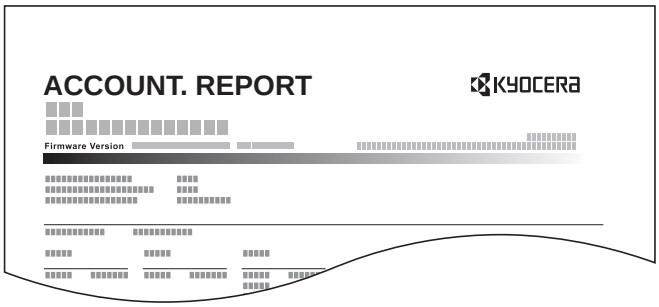

Use the procedure below to print a job accounting report.

1 Prepare paper.

Check that A4 or Letter paper is loaded in the cassette.

2 Display the screen.

[**System Menu/Counter**] key > [**User Login/Job Accounting**] > [**Job Accounting Settings**]

NOTE

If the user authentication screen appears, enter your login user name and login password and select [**Login**]. For this, you need to login with administrator privileges. The factory default login user name and login password are set as shown below.

Login User Name: **3000**

Login Password: **3000**

3 Print the report.

[**Print Accounting Report**] > [**Yes**]

Accounting report is printed.

Using Job Accounting

This section explains procedures while setting job accounting.

Login/Logout

If job accounting is enabled, an account ID entry screen appears each time you use this machine.

Use the procedure below to login and logout.

Login

1 In the account ID entry screen, enter the account ID using the numeric keys and select [**Login**].

NOTE

- If you entered a wrong character, select the [**Clear**] key and enter the account ID again.
- If the entered account ID does not match the registered ID, a warning beep will sound and login will fail. Enter the correct account ID.
- By selecting [**Check Counter**], you can refer to the number of pages printed and the number of pages scanned.

When the screen to enter the login user name and password appears

If user login administration is enabled, the screen to enter the login user name and password appears. Enter a login user name and password to login. If the user has already registered the account information, the account ID entry would be skipped.

Adding a User (Local User List) (page 9-5)

2 Proceed to complete the rest of the steps.

Logout

When the operations are complete, select the [**Authentication/Logout**] key to return to the account ID entry screen.

Unknown ID Job

This specifies the behavior for handling the jobs sent with unknown or unsent login user names or User ID. If the User Login is set to invalid and Job Accounting is set to valid, follow the procedure when the Account ID is unknown.

The setting items are as follows.

Item	Descriptions
Permit	The job is permitted to be printed.
Reject	The job is rejected (not printed).

1 Display the screen.

1 [**System Menu/Counter**] key > [**User Login/Job Accounting**]

> **NOTE**
>
> If the user authentication screen appears, enter your login user name and login password and select [**Login**]. For this, you need to login with administrator privileges. The factory default login user name and login password are set as shown below.
>
> **Login User Name:** **3000**
>
> **Login Password:** **3000**

2 Select [**Unknown ID Job**].

2 Configure the settings.

Select [**Permit**] or [**Reject**].

10 Troubleshooting

This chapter explains the following topics:

Regular Maintenance 10-2
Cleaning 10-2
Cleaning Glass Platen 10-2
Cleaning inside of the Document Processor 10-2
Cleaning Slit Grass 10-3
Replace the toner container 10-4
Replace the Waste Toner Box 10-7
Loading Paper 10-10
Replacing Staples 10-11
Troubleshooting 10-13
Solving Malfunctions 10-13
Machine Operation Trouble 10-13
Printed Image Trouble 10-16
Color printing trouble 10-19
Responding to Messages 10-20
Adjustment/Maintenance 10-30
Overview of Adjustment/Maintenance 10-30
Color Registration Procedure 10-30
Tone Curve Adjustment 10-35
Drum Refresh 10-36
Calibration 10-37
Laser Scanner Cleaning 10-37
Clearing Paper Jams 10-38
Jam Location Indicators 10-38
Remove any jammed paper in Cassette 1 and 2 10-40
Remove any jammed paper in Cassette 3 (500-sheet x 2) 10-41
Remove any jammed paper in Cassette 3 (2000-sheet x 1) 10-43
Remove any jammed paper in Cassette 4 (500-sheet x 2) 10-45
Remove any jammed paper in the Multi Purpose Tray 10-47
Remove any jammed paper in Right Cover 1 10-48
Remove any jammed paper in Right Cover 2 10-51
Remove any jammed paper in Right Cover 3 (500-sheet x 2) 10-52
Remove any jammed paper in Right Cover 3 (2000-sheet x 1) 10-53
Remove any jammed paper in the Bridge Unit 10-54
Remove any jammed paper in the Mailbox 10-55
Remove any jammed paper in the Inner Finisher 10-56
Remove any jammed paper in the Document Processor 10-57
Clearing a Staple Jam 10-59
Clearing a staple jam 10-59

Regular Maintenance

Cleaning

Clean the machine regularly to ensure optimum printing quality.

CAUTION

For safety, always unplug the power cord before cleaning the machine.

Cleaning Glass Platen

Wipe the inside of the document processor and the glass platen with a soft cloth dampened with alcohol or mild detergent.

IMPORTANT

Do not use thinner or other organic solvents.

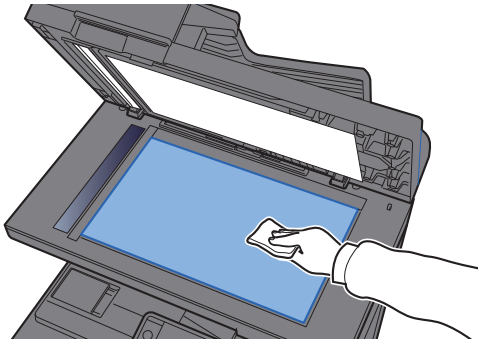

Cleaning inside of the Document Processor

Wipe the inside of the document processor with a soft cloth dampened with alcohol or mild detergent.

IMPORTANT

Do not use thinner or other organic solvents.

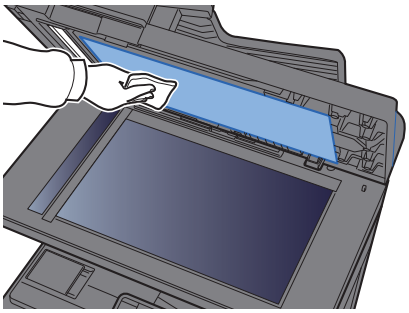

Cleaning Slit Grass

When using the document processor, clean the slit glass surface and the reading guide with the dry cloth.

IMPORTANT

Do not use water, soap or solvents for cleaning.

NOTE

Dirt on the slit glass or the reading guide may cause black streaks to appear in the output.

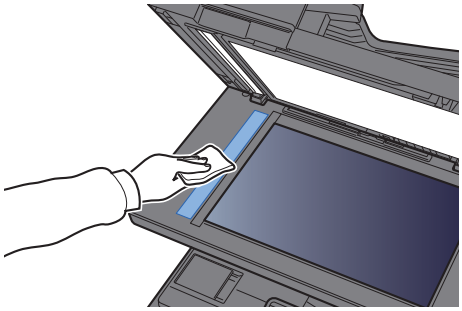

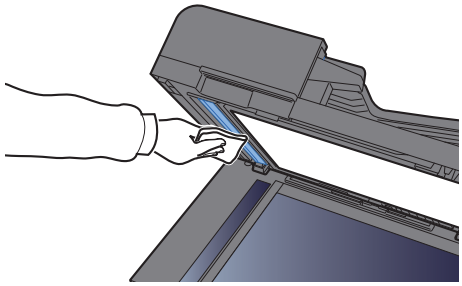

Replace the toner container

When toner runs out, the following messages will be displayed "Toner [C][M][Y][K] are empty." Make sure you have a new toner container available for replacement.

When toner runs low, "Toner is low. [C][M][Y][K] (Replace when empty.)" appears in the touch panel. Make sure you have a new toner container available for replacement.

NOTE

- For the toner container, always use a genuine toner container. Using a toner container that is not genuine may cause image defects and product failure.
- The memory chip in the toner container of this product stores information necessary for improving customer convenience, operation of the recycling system for used toner containers, and planning and development of new products. The stored information does not include information that makes it possible to identify individuals, and is only used anonymously for the above purposes.

CAUTION

Do not attempt to incinerate parts which contain toner. Dangerous sparks may cause burns.

Installation procedures of the toner container is same for every color. Here, we'll explain the yellow toner container, as an example.

1 Open the front cover.

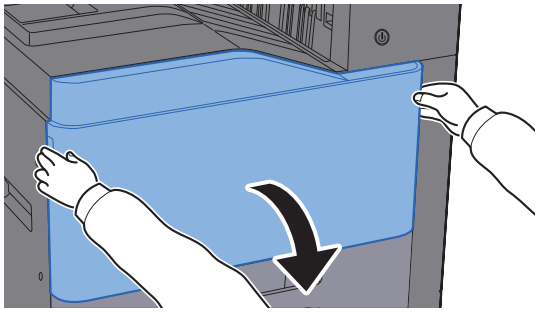

2 Unlock the toner container.

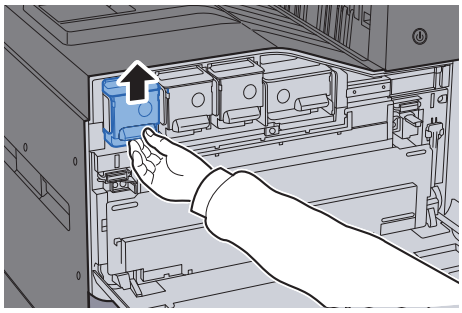

3 Remove the toner container.

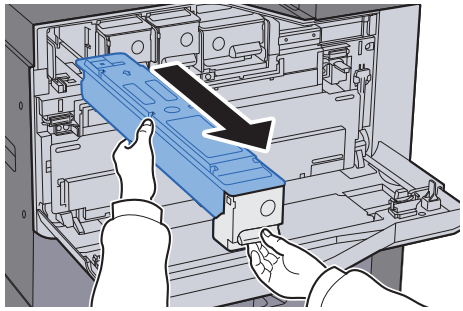

4 Put used toner container into the plastic waste bag.

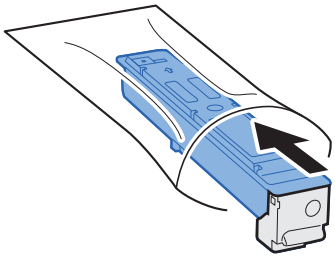

5 Remove the new toner container from the box.

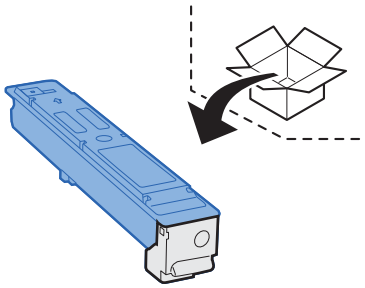

IMPORTANT

Do not touch the points shown below.

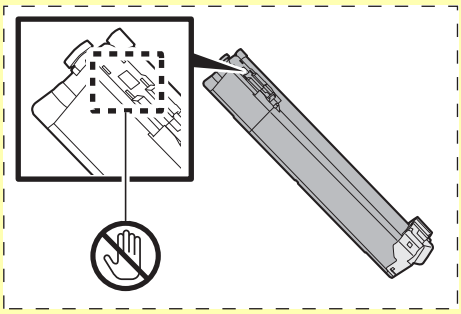

6 Tap the toner container.

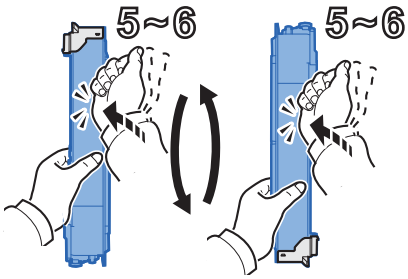

7 Shake the toner container.

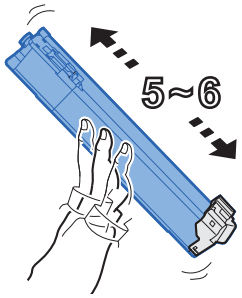

8 Install the toner container.

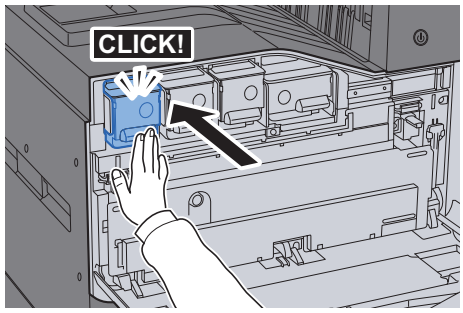

9 Close the front cover.

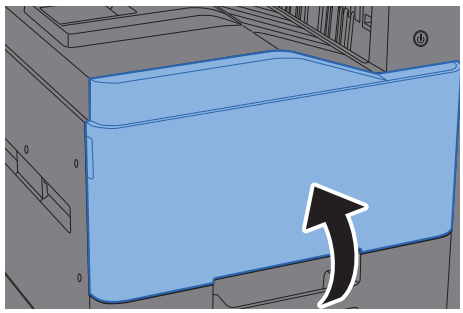

NOTE

- If the front cover does not close, check that the new toner container is installed correctly.
- Return the exhausted toner container to your dealer or service representative. The collected toner container will be recycled or disposed in accordance with the relevant regulations.

Replace the Waste Toner Box

When the touch panel shows "Replace the waste toner box.", immediately replace the waste toner box.

CAUTION

Do not attempt to incinerate parts which contain toner. Dangerous sparks may cause burns.

1 Open the front cover.

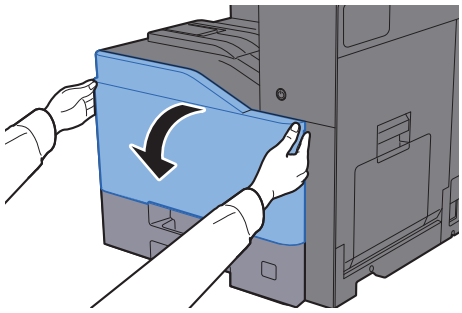

2 Remove the Waste Toner Box and put it on the flat surface.

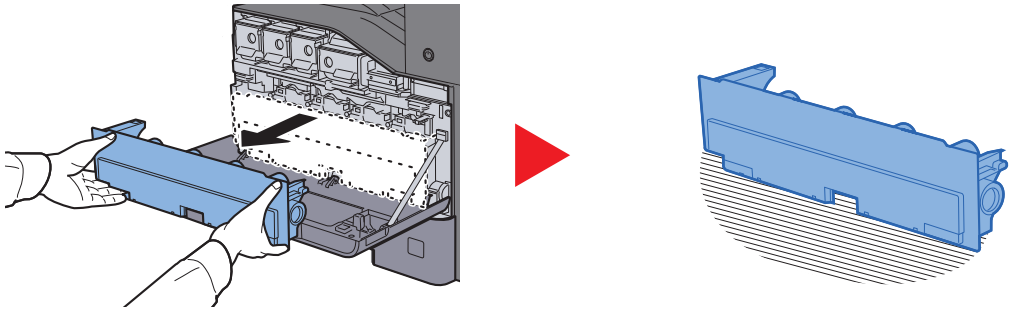

3 Unpack the caps inside the carton box.

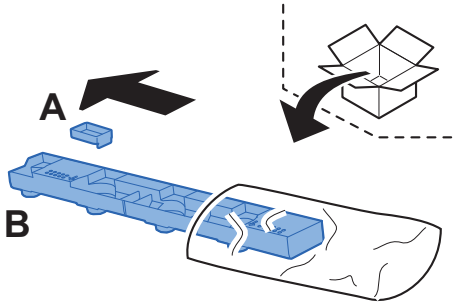

4 Change the direction of the used Waste Toner Box as shown below.

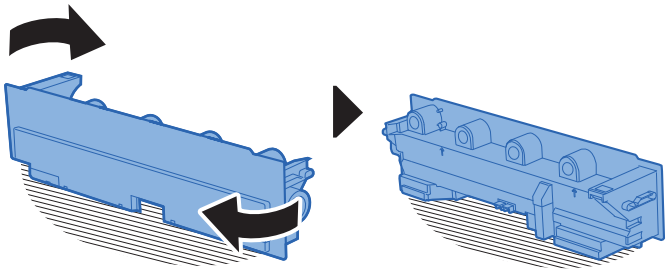

5 Attach the Cap A.

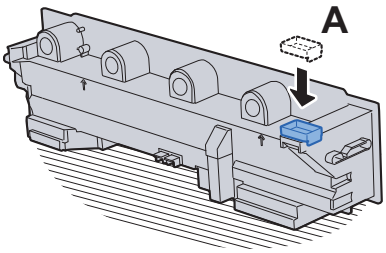

6 Change the direction of the used Waste Toner Box as shown below.

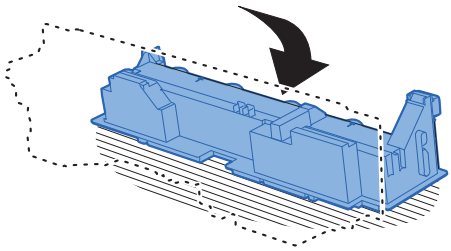

7 Attach the Cap B.

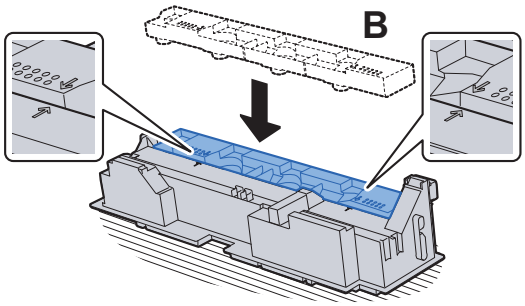

8 Put the used Waste Toner Box into the plastic waste bag.

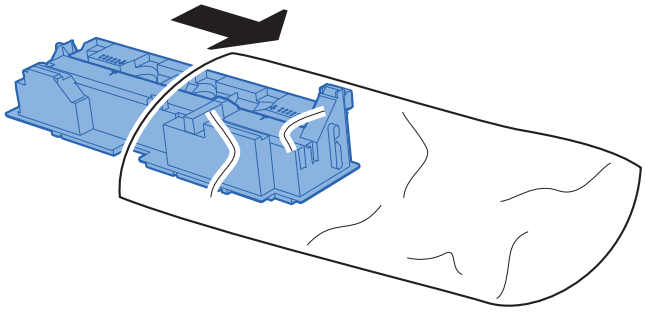

9 Unpack the new Waste Toner Box.

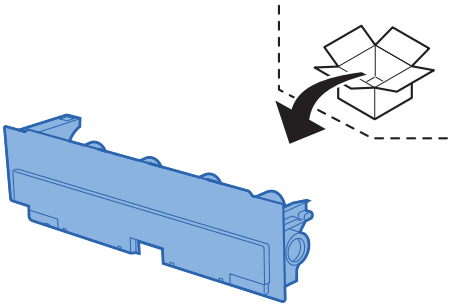

10 Install the new Waste Toner Box.

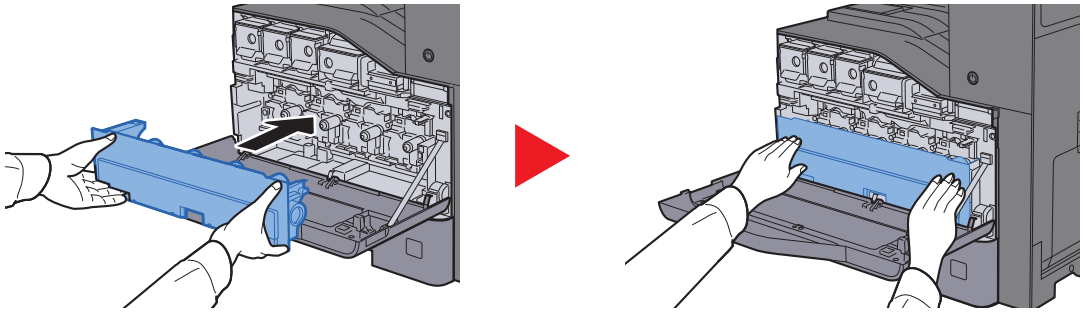

11 Close the front cover.

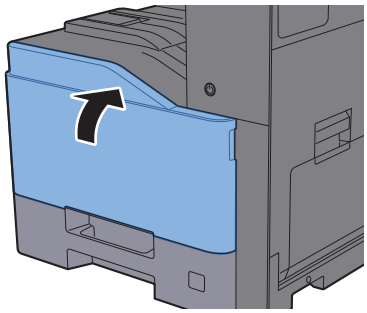

NOTE

Return the exhausted waste toner box to your dealer or service representative. The collected waste toner box will be recycled or disposed in accordance with the relevant regulations.

Loading Paper

When Cassette # runs out of paper, the following messages will be displayed.

"Add the following paper in cassette #."

"Add the following paper in the multi purpose tray."

Loading in the Cassettes (page 3-4)

Loading Paper in the Multi Purpose Tray (page 5-5)

Replacing Staples

When the touch panel shows "Staple is empty.", the staple cartridge holder need to be replenished with staples.

NOTE

If the Staple Unit runs out of staples, contact your dealer or service representative.

1 Open the inner finisher unit.

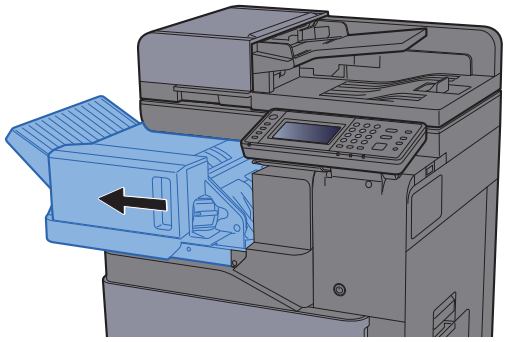

2 Remove the Staple Cartridge Holder.

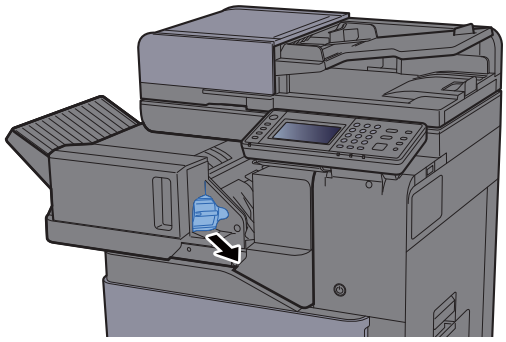

3 Replace the staples.

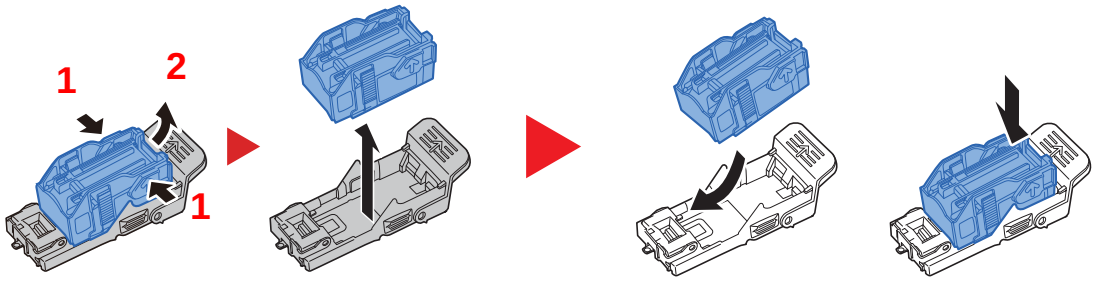

4 Install the Staple Cartridge Holder.

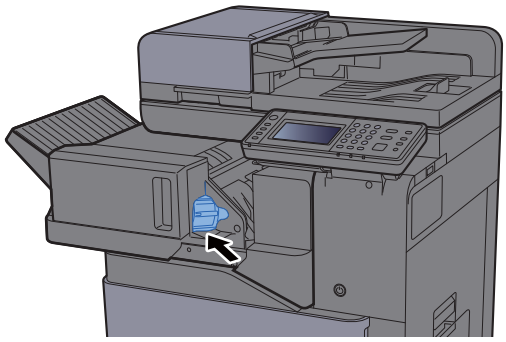

5 Return the unit to the original position.

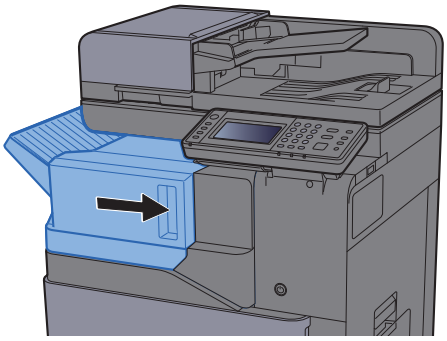

Troubleshooting

Solving Malfunctions

The table below provides general guidelines for problem solving.

If a problem occurs with your machine, look into the checkpoints and perform procedures indicated on the following pages. If the problem persists, contact your Service Representative.

NOTE

When contacting us, the serial number will be necessary.
To check the serial number, refer to the following:

Display for Device Information (page 2-16)
Machine Operation Trouble (page 10-13)

Machine Operation Trouble

When the following machine operation troubles occur, implement appropriate procedures.

Symptom	Checkpoints	Corrective Actions	Reference Page
An application does not start.	Is the Auto Panel Reset time short?	Set the Auto Panel Reset time to 30 seconds or more.	page 8-40
The screen does not respond when the power switch is turned on.	Check the power cord.	Connect both ends of the power cord securely.	page 2-8
Pressing the [**Start**] key does not produce copies.	Is there a message on the screen?	Determine the appropriate response to the message and respond accordingly.	page 10-20
	Is the machine in Sleep mode?	Select any key on the operation panel to recover the machine from Sleep mode.	page 2-26
Blank sheets are ejected. 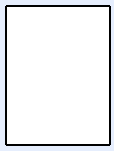	Are the originals loaded correctly?	When placing originals on the platen, place them face-down and align them with the original size indicator plates.	page 5-2
		When placing originals in the document processor, place them face-up.	page 5-3
	—	Check that the settings of the application software.	—
Paper often jams.	Is the paper loaded correctly?	Load the paper correctly.	page 3-4
	—	Turn the orientation 180 degrees around in which the paper is positioned.	page 3-4
	Is the paper of the supported type? Is it in good condition?	Remove the paper, turn it over, and reload it.	page 3-4
	Is the paper curled, folded or wrinkled?	Replace the paper with new paper.	page 3-4
	Are there any loose scraps or jammed paper in the machine?	Remove any jammed paper.	page 10-38

Symptom	Checkpoints	Corrective Actions	Reference Page
2 or more sheets are overlaps when ejected. (multi feed) 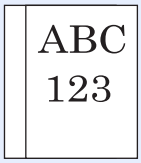	—	Load the paper correctly.	page 3-2
Printouts are wrinkled. 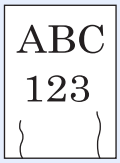	Is the paper loaded correctly?	Load the paper correctly.	page 3-4
	—	Turn the orientation 180 degrees around in which the paper is positioned.	page 3-2
	Is the paper damp?	Replace the paper with new paper.	page 3-4
Printouts are curled. 	—	Turn the orientation 180 degrees around in which the paper is positioned.	page 3-2
	Is the paper damp?	Replace the paper with new paper.	page 3-4
Cannot print.	Is the machine plugged in?	Plug the power cord into an AC outlet.	—
	Is the machine powered on?	Turn on the power switch.	page 2-9
	Are the USB cable and network cable connected?	Connect the correct USB cable and network cable securely.	page 2-7
	Is the print job paused?	Resume printing.	page 7-10
Cannot print with USB memory. USB memory not recognized.	Is the USB host blocked?	Select [**Unblock**] in the USB host settings.	page 8-37
	—	Check that the USB memory is securely plugged into the machine.	—
While "Auto-IP" is set to [**On**], the IP address is not assigned automatically.	Is a value other than "0.0.0.0" entered for the IP address of TCP/IP(v4)?	Enter "0.0.0.0" for the IP address of TCP/IP(v4).	page 2-24

Symptom	Checkpoints	Corrective Actions	Reference Page
Cannot send via SMB.	Is the network cable connected?	Connect the correct network cable securely.	page 2-7
	Have the network settings for the equipment been configured properly?	Configure the TCP/IP settings properly.	page 8-29
	Have the folder sharing settings been configured properly?	Check sharing settings and access privileges under the folder properties.	page 3-14
	Has the SMB protocol been set to [**On**]?	Set the SMB protocol setting to [**On**].	page 8-31
	Has [**Host Name**] been entered properly? *1	Check the name of the computer to which data is being sent.	page 5-22
	Has [**Path**] been entered properly?	Check the share name for the shared folder.	page 5-22
	Has [**Login User Name**] been entered properly? *1 *2	Check the domain name and login user name.	page 5-22
	Has the same domain name been used for [**Host Name**] and [**Login User Name**]?	Delete the domain name and backslash ("/") from [**Login User Name**].	page 5-22
	Has [**Login Password**] been entered properly?	Check the login password.	page 5-22
	Have exceptions for Windows Firewall been configured properly?	Configure exceptions for Windows Firewall properly.	page 3-18
	Do the time settings for the equipment, domain server, and data destination computer differ?	Set the equipment, domain server, and data destination computer to the same time.	—
	Is the screen displaying Send error?	Refer to Responding to Send Error.	page 10-27
Cannot send via the e-mail.	Is the E-mail send size limit set in the SMTP server registered on the machine?	Check the limit value is entered to "E-mail Size Limit" of [**E-mail**] setting in Command Center RX and change the value as necessary.	page 2-52
The machine is emitting steam in the area around the paper ejection slot.	Check the room temperature to see if it is low, or if damp paper was used.	Depending on the printing environment and the paper's condition, the heat generated during printing will cause the moisture in the paper to evaporate, and the steam emitted may look like smoke. This is not a problem, and you can continue printing. If the steam concerns you, raise the room temperature, or replace the paper with a newer, dryer paper.	—

*1 You can also enter a full computer name as the host name (for example, pc001.abcdnet.com).
*2 You can also enter login user names in the following formats:
Domain_name/user_name (for example, abcdnet/james.smith)
User_name@domain_name (for example, james.smith@abcdnet)

Printed Image Trouble

When the following printed image trouble occurs, implement appropriate procedures.

Symptom	Checkpoints	Corrective Actions	Reference Page
Printouts are totally too light. 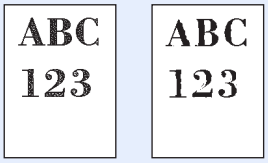	Is the paper damp?	Replace the paper with new paper.	page 3-2
	Have you changed the density?	Select appropriate density level.	page 6-16 page 8-42
	Is the toner distributed evenly within the toner container?	Shake the toner container from side to side several times.	page 10-4
	Is EcoPrint mode enabled?	Disable [**EcoPrint**] mode.	page 8-16
	—	Select the [**System Menu/Counter**] key > [**Adjustment/Maintenance**] > [**Service Setting**] > [**DEV-CLN**] Run [**DEV-CLN**].	—
	—	Run [**Laser Scanner Cleaning**].	page 10-37
	—	Make sure the paper type setting is correct for the paper being used.	page 8-15
Printouts are too dark even though the background of the scanned original is white. 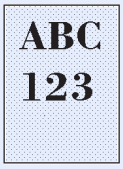	Have you changed the density?	Select appropriate density level.	page 6-16 page 8-42
	—	Run [**Calibration**].	page 10-37
Copies have a moire pattern (dots grouped together in patterns and not aligned uniformly). 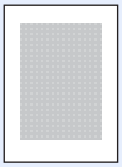	Is the original a printed photograph?	Set the original image to [**Photo**].	page 6-16
Texts are not clearly printed. 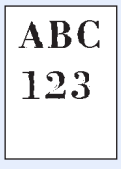	Did you choose appropriate image quality for the original?	Select appropriate image quality.	page 6-16

Symptom	Checkpoints	Corrective Actions	Reference Page
Black or color dots appear on the white background when white original is scanned. 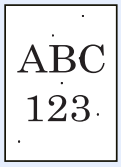	Is the original holder or the glass platen dirty?	Clean the original holder or the glass platen.	page 10-2
Printouts are fuzzy. 	Is the machine being used in conditions of very humid, or humidity or temperature rapidly changes?	Use in an environment that has suitable humidity.	—
	—	Run [**Drum Refresh**]	page 10-36
Images are skewed. 	Are the originals placed correctly?	When placing originals on the platen, align them with the original size indicator plates.	page 5-2
		When placing originals in the document processor, align the original width guides securely before placing the originals.	page 5-3
	Is the paper loaded correctly?	Check the position of the paper width guides.	page 3-4
Irregular horizontal lines appear in the image. 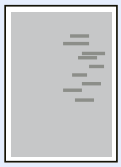	—	Select the [**System Menu/Counter**] key > [**Adjustment/Maintenance**] > [**Service Setting**] > [**MC**] and increase the adjustment value. Increase the adjustment value 1 level at a time from the current value. If there is no improvement after the value is increased by 1 level, increase by 1 level again. If there is still no improvement, return the setting to the original value.	—
The altitude is 1000 m or higher and irregular horizontal white lines appear in the image. 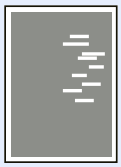	—	Select the [**System Menu/Counter**] key > [**Adjustment/Maintenance**] > [**Service Setting**] > [**Altitude Adjustment**], and set to an elevation one level higher than the current setting.	—
The altitude is 1000 m or higher and dots appear in the image. 	—	Select the [**System Menu/Counter**] key > [**Adjustment/Maintenance**] > [**Service Setting**] > [**Altitude Adjustment**], and set to an elevation one level higher than the current setting.	—

Symptom	Checkpoints	Corrective Actions	Reference Page
Printouts have vertical lines. 	Is the slit glass dirty?	Clean the slit glass.	page 10-3
	—	Run [**Laser Scanner Cleaning**].	page 10-37
Dirt on the top edge or back of the paper. 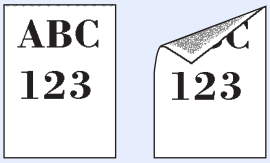	Is the interior of the machine dirty?	Open the right cover. If the machine interior is dirty with toner, clean it using soft, dry, lint-free cloth.	—
Part of the image is periodically faint or shows white lines. 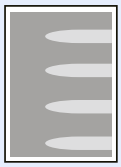	—	Open and then close the right cover.	—
	—	Select the [**System Menu/Counter**] key > [**Adjustment/Maintenance**] > [**Service Setting**] > [**MC**] and decrease the adjustment value. Decrease the adjustment value 1 level at a time from the current value. If there is no improvement after the value is decreased by 1 level, decrease by 1 level again. If there is still no improvement, return the setting to the original value.	—
	—	Run [**Drum Refresh**].	page 10-36
	—	Select the [**System Menu/Counter**] key > [**Adjustment/Maintenance**] > [**Service Setting**] > [**DEV-CLN**] Run [**DEV-CLN**].	—
Print on the back of the sheet is visible on the front. 	—	Set [**Prevent Bleed-through**] to [**On**].	page 6-23 page 8-16
The previous image remains and lightly printed. 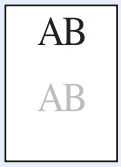	—	Select the [**System Menu/Counter**] key > [**Adjustment/Maintenance**] > [**Service Setting**] > [**MC**] and increase the adjustment value. Increase the adjustment value 1 level at a time from the current value. If there is no improvement after the value is increased by 1 level, increase by 1 level again. If there is still no improvement, return the setting to the original value.	—

Color printing trouble

When the following color printing trouble occurs, implement appropriate procedures.

Symptom	Checkpoints	Corrective Actions	Reference Page
Skewed-color printout. 	—	Run [**Calibration**].	page 10-37
	—	Run [**Color Registration**].	page 10-30
Colors appear different than you anticipated.	Did you choose appropriate image quality for the original?	Select appropriate image quality.	page 6-16
	Have you loaded color copy paper into the paper tray?	Load color copy paper into the paper tray.	—
	—	Run [**Calibration**].	page 10-37
	—	Run [**Tone Curve Adjustment**]	page 10-35
	—	**When making copies** Adjust the color balance.	page 6-19
	—	**When printing from a computer** Adjust the color using the printer driver.	—
Perform Tone Curve Adjustment in the System Menu. is displayed.	Over long periods of use, the effects of the ambient temperature and humidity can cause color output hues to vary slightly.	Run [**Tone Curve Adjustment**]	page 10-35
The color toner is empty.	Do you want to continue printing in black and white?	If the black toner is remained, the machine continues printing in black and white by selecting [**Print in Black and White**] of [**Color Toner Empty Action**].	page 8-19

Responding to Messages

If the touch panel or the computer displays any of these messages, follow the corresponding procedure.

NOTE

When contacting us, the serial number will be necessary. To check the serial number, refer to the following:

Display for Device Information (page 2-16)
Loading Paper in the Multi Purpose Tray (page 5-5)

Message	Checkpoints	Corrective Actions	Reference Page
A			
Acceptable staple count exceeded.	Is the acceptable staple count exceeded?	Select [**Continue**] to print without stapling. Select [**Cancel**] to cancel the job.	—
Activation error.	—	Turn the power switch off and on. If the error exists, contact administrator.	page 2-9
Add the following paper in cassette #.	Is the indicated cassette out of paper?	Load paper. Select [**Paper Selection**] to select the other paper source. Select [**Continue**] to print on the paper in the currently selected paper source.	page 3-2
Add the following paper in the multi purpose tray.	Does the selected paper size matches the paper size loaded in the specified paper source?	Select [**Continue**] to continue printing. Select [**Cancel**] to cancel the job.	—
	Is the indicated cassette out of paper?	Load paper. Select [**Paper Selection**] to select the other paper source. Select [**Continue**] to print on the paper in the currently selected paper source.	page 3-9
Adjusting...	—	The machine is under the adjustment to maintain its quality. Please wait.	—
B			
Box is not found.	—	The specified box cannot be found. Job is canceled. Select [**End**].	—
Box limit exceeded.[*1]	Is [**End**] displayed on the screen?	The specified box is full, and no further storage is available; Job is canceled. Select [**End**]. Try to perform the job again after printing or deleting data from the box.	—
C			
Calibrating...	—	The machine is under the adjustment to maintain its quality. Please wait.	page 10-37

Message	Checkpoints	Corrective Actions	Reference Page
Cannot connect to Authentication Server.*1	—	Set machine time to match the server's time.	page 2-23
	—	Check the domain name.	page 9-2
	—	Check the host name.	page 9-2
	—	Check the connection status with the server.	—
Cannot duplex print on the following paper.*1	Did you select a paper size/type that cannot be duplex printed?	Select [**Paper Selection**] to select the available paper. Select [**Continue**] to print without using Duplex function.	page 6-27
Cannot print the specified number of copies.*1	—	Only one copy is available. Select [**Continue**] to continue printing. Select [**Cancel**] to cancel the job. The machine may reproduce the same originals by arranging the following settings: • Uncheck [**RAM Disk**] in the [**Device Settings**] tab of the printer's properties. **NOTE** If you unchecked the [**RAM Disk**], check the [**RAM Disk**] again after the printing is completed. If not, print speed may be reduced.	—
Cannot process this job.*1	—	This job is canceled because it is restricted by User Authorization or Job Accounting. Select [**End**].	—
Cannot staple the following paper.	Did you select a paper size/type that cannot be stapled?	Select [**Paper Selection**] to select the available paper. Select [**Continue**] to print without using Staple function.	—
Cannot use Staple due to a failure.	—	Contact your Service Representative.	—
Cassette # failure.	—	Contact your Service Representative.	—
Cleaning the laser scanner…	—	The machine is under the adjustment to maintain its quality. Please wait.	—

E

Error occurred at cassette #.	—	Remove the indicated cassette. Select [**Next >**] to follow the instructions.	—

F

Failed to specify Job Accounting.*1	—	Failed to specify Job Accounting when processing the job externally. The job is canceled. Select [**End**].	—
Failed to store job retention data.	—	The job is canceled. Select [**End**]. Insufficient free space in the Job Box. Try to perform the job again after printing or deleting data from the Job Box.	—

Message	Checkpoints	Corrective Actions	Reference Page
Finisher tray is full of paper.	Is the acceptable storage capacity exceeded for the document finisher tray?	Remove paper from the document finisher tray.	—

H

High temperature. **Adjust room temp.**	—	Adjust the temperature and the humidity of your room.	—

I

Incorrect account ID.[*1]	—	The account ID was incorrect when processing the job externally. The job is canceled. Select [**End**].	—
Incorrect box password.	—	The box password was incorrect when processing the job externally. The job is canceled. Select [**End**].	—
Incorrect Login User Name or Password.[*1]	—	The login user name or password was incorrect when processing the job externally. The job is canceled. Select [**End**].	—
Inner tray is full of paper.	—	Remove paper from the inner tray. Select [**Continue**] to resume printing. Select [**Cancel**] to cancel the job.	—

J

Job Accounting restriction exceeded.	Is the acceptable printing count restricted by Job Accounting exceeded?	The printing count exceeded the acceptable count restricted by Job Accounting. Cannot print any more. This job is canceled. Select [**End**].	—
Job separator tray is full of paper.	Is the maximum capacity of the job separator tray exceeded?	Follow the instruction indicated on the machine and remove paper from the job separator tray.	—

K

KPDL error.[*1]	—	PostScript error has occurred. The job is canceled. Select [**End**].	—

L

Low temperature. Adjust room temp.	—	Adjust the temperature and the humidity of your room.	—

M

Machine failure.	—	Internal error has occurred. Make a note of the error code displayed on the screen, and contact your Service Representative.	—
Mailbox (tray #) failure.	—	Contact your Service Representative.	—
Mailbox tray # is full of paper.	Is the acceptable storage capacity exceeded for the Mailbox tray?	Remove paper from the Mailbox tray.	—

Message	Checkpoints	Corrective Actions	Reference Page
Maximum number of scanned pages.	Is the acceptable scanning count exceeded?	Only one copy of the scanned pages is available. Select [**Continue**] to print, send or store the scanned pages. Select [**Cancel**] to cancel printing, sending or storing.	—
Memory card error.	—	An error has occurred on the memory card. Job is canceled. Select [**End**]. 04: Insufficient space on the memory card to complete this operation. Move data or delete unneeded data.	—
Memory is full.[*1]	Do you want to send the scanned image to the PC, or store the image in the machine?	The process cannot be performed due to insufficient memory. The job is canceled. Select [**End**]. The machine may reproduce the same originals by arranging the following setting: • Decrease [**Image Quality**] of [**File Format**].	—
	Do you want to print data from the PC?	Unable to continue the job as the memory is used up. Select [**Continue**] to print the scanned pages. The print job cannot be processed completely. Select [**Cancel**] to cancel the job. The machine may reproduce the same originals by arranging the following settings: • Select [**On**] of RAM Disk Setting in System Menu, and then decrease the RAM disk size. • Select [**Printer Priority**] of Optional Memory in System Menu. **NOTE** Before changing the RAM Disk Setting or Optional Memory setting, contact your administrator.	—

P

Paper jam.	—	If a paper jam occurs, the machine will stop and the location of the jam will be indicated on the screen. Leave the machine on and follow the instruction to remove the jammed paper.	page 10-38
Perform Tone Curve Adjustment.	Over long periods of use, the effects of the ambient temperature and humidity can cause color output hues to vary slightly.	Run [**Tone Curve Adjustment**].	page 10-35
Preparing to print.	—	The machine is under the adjustment to maintain its quality. Please wait.	—
Print overrun.	—	Warning. Low printer memory. The job was paused. Re-starting the job. Select [**Continue**].	—

Message	Checkpoints	Corrective Actions	Reference Page
R			
RAM disk error.	—	An error has occurred on the RAM disk. Job is canceled. Select [**End**]. The possible error codes and their descriptions are as follows. 04: Insufficient space on the RAM disk. If the optional RAM disk is installed, increase the RAM disk size by changing RAM Disk Setting in System Menu. **NOTE** The range of RAM disk size can be increased by selecting [**Printer Priority**] in Optional Memory.	page 8-38
Removable memory error.	Is writing to a removable memory prohibited?	An error occurred in the removable memory. The job stopped. Select [**End**]. The possible error codes and their descriptions are as follows. 01: Connect a removable memory that can be written to.	—
	—	An error occurred in the removable memory. The job stopped. Select [**End**]. The possible error codes and their descriptions are as follows. 01: The amount of data that can be saved at once has been exceeded. Turn the power OFF/ON. If the error still occurs, the removable memory is not compatible with the machine. Use the removable memory formatted by this machine. If the removable memory cannot be formatted, it is damaged. Connect a compatible removable memory.	—
Removable Memory is full.[*1]	—	Job is canceled. Select [**End**]. Insufficient free space in the removable memory. Delete unnecessary files.	—
Remove originals in document processor.	Are there any originals left in the document processor?	Remove originals from the document processor.	—
Replace all originals and press [Continue].	—	Remove originals from the document processor, put them back in their original order, and place them again. Select [**Continue**] to resume printing. Select [**Cancel**] to cancel the job.	—
Replace MK.	—	Replacement of the parts in the maintenance kit is necessary at every 200,000 pages of printing and requires professional servicing. Contact your Service Representative.	—
Running security function...	—	Running security function. Please wait.	—

Message	Checkpoints	Corrective Actions	Reference Page
S			
Scanner memory is full.[*1]	—	Scanning cannot be performed due to insufficient memory of scanner. Only one copy of the scanned pages is available. Select [**Continue**] to print, send or store the scanned pages. Select [**Cancel**] to cancel the printing job. The machine may reproduce the same originals by arranging the following settings: • Reduce the number of originals to be scanned at once. Furthermore, the machine may reproduce the same originals by arranging the following settings: • Select [**Copy Priority**] of Optional Memory in System Menu. **NOTE** Before changing the Optional Memory setting, contact your administrator.	—
Send Error.[*1]	—	An error has occurred during transmission. The job is canceled. Select [**End**]. Refer to Responding to Send Error for the error code and corrective actions.	page 10-27
SSD error.	—	An error has occurred on SSD. Job is canceled. Select [**End**]. The possible error codes and their descriptions are as follows. 01: The amount of data that can be saved at once has been exceeded. Turn the power OFF/ON. If the error still occurs, divide the file into smaller files. If the error occurs after the file is divided, the specified file may be damaged. Delete the file. 04: Insufficient space on SSD to complete this operation. Move data or delete unneeded data.	—
Staple is empty.	Has any of the document finisher run out of staples?	If the staples are depleted, the machine will stop and the location of staple depletion will be indicated on the screen. Leave the machine on and follow the instruction to replace the staple case. Select [**Continue**] to print without stapling. Select [**Cancel**] to cancel the job.	—
Staple jam.	—	If a staple jam occurs, the machine will stop and the location of the jam will be indicated on the screen. Leave the machine on and follow the instruction to remove the jammed staple.	—

Message	Checkpoints	Corrective Actions	Reference Page
System error.	—	System error has occurred. Follow the instructions on the screen.	—

T

The cover is open.	Is the top cover of the document processor open?	Close the document processor cover.	—
	Is there any cover which is open?	Close the cover indicated on the screen.	
The slit glass requires cleaning.	—	Clean the slit glass using the cleaning cloth supplied with the document processor.	page 10-3
This memory is not formatted.	Is the removable memory formatted by this machine?	Perform [**Format**] on this machine.	page 7-11
This user account is locked out.	—	Contact administrator. Job is canceled. Select [**End**].	—
Toner [C][M][Y][K] are empty.	—	Replace the toner container to our specified toner container. **NOTE** If the color toner is empty but the black toner is remained, the machine continues printing in black and white by selecting [**Print in Black and White**] of Color Toner Empty Action.	page 10-4
Toner is low. [C][M][Y][K] (Replace when empty.)	—	It is almost time to replace the toner container. Obtain a new toner container.	—

U

Unknown toner installed.	Is the installed toner container our own brand?	We will not be liable for any damage caused by the use of third party supplies in this machine.	—
Unknown Toner Installed. PC [C][M][Y][K]	Does the installed toner container's regional specification match the machine's?	Install the specified container.	—

W

Warning low memory.	—	Cannot start the job. Try again later.	—
Waste toner box is full.	Is the waste toner box full?	Replace the waste toner box.	page 10-7
Waste toner box is not installed.	—	The waste toner box is not installed correctly. Set it correctly.	page 10-7

Y

You cannot use this box.	—	You cannot use the specified box. Job is canceled. Select [End].	—

*1 When Auto Error Clear is set to [**On**], processing resumes automatically after a set amount of time elapses. For details on Auto Error Clear, refer to the following:

Auto Error Clear (page 8-41)

Responding to Send Error

Error Code	Message	Corrective Actions	Reference Page
1101	Failed to send the e-mail.	Check the host name of the SMTP server on the Command Center RX.	page 2-52
	Failed to send via FTP.	Check the host name of FTP.	page 5-25
	Failed to send via SMB.	Check the host name of SMB.	page 5-22
1102	Failed to send via SMB.	Check the SMB settings. • Login user name and login password **NOTE** If the sender is a domain user, specify the domain name. • Host name • Path	page 5-22
	Failed to send the e-mail.	Check the following on the Command Center RX. • SMTP login user name and login password • POP3 login user name and login password • E-mail size limit	page 2-52
	Failed to send via FTP.	Check the FTP settings. • Login user name and login password **NOTE** If the sender is a domain user, specify the domain name. • Path • Folder share permissions of the recipient	page 5-25
1103	Failed to send via SMB.	Check the SMB settings. • Login user name and login password **NOTE** If the sender is a domain user, specify the domain name. • Path • Folder share permissions of the recipient	page 5-22
	Failed to send via FTP.	Check the FTP settings. • Path • Folder share permissions of the recipient	page 5-25
1104	Failed to send the e-mail.	Check the e-mail address. **NOTE** If the address is rejected by the domain, you cannot send the email.	page 5-21

Error Code	Message	Corrective Actions	Reference Page
1105	Failed to send via SMB.	Check the following settings. [**System Menu/Counter**] key > [**System/Network**] > [**Network**] > [**TCP/IP Settings**] > [**Protocol Detail**] > [**SMB Client (Transmission)**]	page 8-29
	Failed to send the e-mail.	Select [**On**] of the SMTP settings on the Command Center RX.	page 2-52
	Failed to send via FTP.	Check the following settings. [**System Menu/Counter**] key > [**System/Network**] > [**Network**] > [**TCP/IP Settings**] > [**Protocol Detail**] > [**FTP Client (Transmission)**]	page 8-29
1106	Failed to send the e-mail.	Check the sender address of SMTP on the Command Center RX.	page 2-52
1131	Failed to send via FTP.	Enable the SSL. [**System Menu/Counter**] key > [**System/Network**] > [**Network**] > [**Secure Protocol**] > [**SSL**]	page 8-33
1132	Failed to send the e-mail.	Check the following of the SMTP server. • Is SMTP over SSL available? • Is the encryption available?	Refer to the **Command Center RX User Guide**.
	Failed to send via FTP.	Check the following of the FTP server. • Is FTPS available? • Is the encryption available?	—
2101	Failed to send via SMB.	Check the network and SMB settings. • The network cable is connected. • The hub is not operating properly. • The server is not operating properly. • Host name and IP address • Port number	—
	Failed to send via FTP.	Check the network and FTP settings. • The network cable is connected. • The hub is not operating properly. • The server is not operating properly. • Host name and IP address • Port number	—
	Failed to send the e-mail.	Check the network and Command Center RX. • The network cable is connected. • The hub is not operating properly. • The server is not operating properly. • POP3 server name of the POP3 user • SMTP server name	page 2-52

Error Code	Message	Corrective Actions	Reference Page
2102 **2103**	Failed to send via FTP.	Check the network. • The network cable is connected. • The hub is not operating properly. • The server is not operating properly.	—
		Check the following of the FTP server. • Is FTP available? • The server is not operating properly.	—
	Failed to send the e-mail.	Check the network. • The network cable is connected. • The hub is not operating properly. • The server is not operating properly.	—
2201 **2202** **2203** **2231**	Failed to send the e-mail. Failed to send via FTP. Failed to send via SMB.	Check the network. • The network cable is connected. • The hub is not operating properly. • The server is not operating properly.	—
2204	Failed to send the e-mail.	Check the e-mail size limit of the SMTP settings on the Command Center RX.	page 2-52
3101	Failed to send the e-mail.	Check the authentication methods of both the sender and the recipient.	—
	Failed to send via FTP.	Check the network. • The network cable is connected. • The hub is not operating properly. • The server is not operating properly.	—
3201	Failed to send the e-mail.	Check the SMTP user authentication method of the recipient.	—
0007 **4201** **4701** **5101** **5102** **5103** **5104** **7101** **7102** **7103** **720f**	—	Turn the power switch off and back on. If this error occurs several times, make a note of the displayed error code and contact your service representative.	page 2-9
9181	—	The scanned original exceeds the acceptable number of pages of 999. Send the excess pages separately.	—

Adjustment/Maintenance

Overview of Adjustment/Maintenance

If there is an image problem and the message to run adjustment or maintenance menu appears, run Adjustment/Maintenance in the system menu.

The table below lists the item you can carry out.

Item	Description	Reference Page
Color Registration Procedure	Correct the color position to resolve color drift.	page 10-30
Tone Curve Adjustment	The printed output tone may differ from the original. Perform this function to ensure consistency with the original tone.	page 10-35
Drum Refresh	Remove image blur and white dots from the printout.	page 10-36
Calibration	Adjust color drift or hue of printed image in the most appropriate color.	page 10-37
Laser Scanner Cleaning	Adjust the printed image that is too light or incomplete, even though there is enough toner.	page 10-37

Color Registration Procedure

When first installing the machine or moving it to a new location, color drift during printing may occur. Use this function to correct the color position of each of cyan, magenta and yellow to resolve color drift.
Auto registration and manual registration are available for Color Registration. Color drift can be largely corrected through auto registration. However, if it is not resolved or to perform more detailed settings, use the manual registration.

NOTE
To perform color registration, verify that either Letter or A4 paper is loaded into a cassette.

IMPORTANT
Before performing color registration, be sure to perform Calibration. If color drift remains, perform color registration. By performing color registration without performing Calibration, the color drift will be resolved once, however, it may cause the serious color drift later.

Auto Correction

1 Load paper.

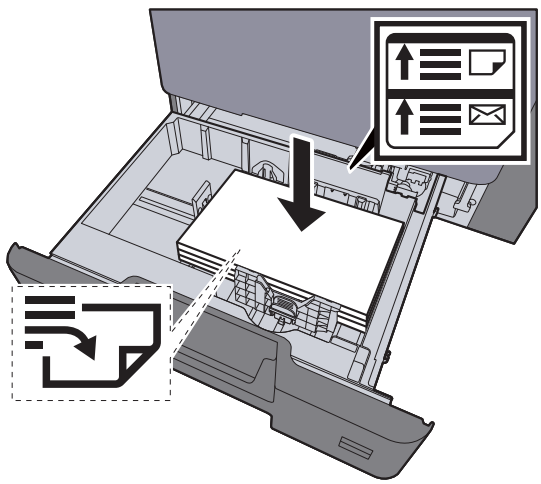

IMPORTANT

- **Load the paper with the print side facing up.**
- **After removing new paper from its packaging, fan the paper before loading it in the multi-purpose tray.**

Loading in the Cassettes (page 3-4)

- **Before loading the paper, be sure that it is not curled or folded. Paper that is curled or folded may cause paper jams.**
- **Ensure that the loaded paper does not exceed the level indicator (see illustration above).**
- **If paper is loaded without adjusting the paper length guide and paper width guide, the paper may skew or become jammed.**

2 Display the screen.

[**System Menu/Counter**] key > [**Adjustment/Maintenance**] > [**Color Registration**] > [**Auto**]

3 Print the chart.

Select [**Start**].

A chart is printed.

Chart Example

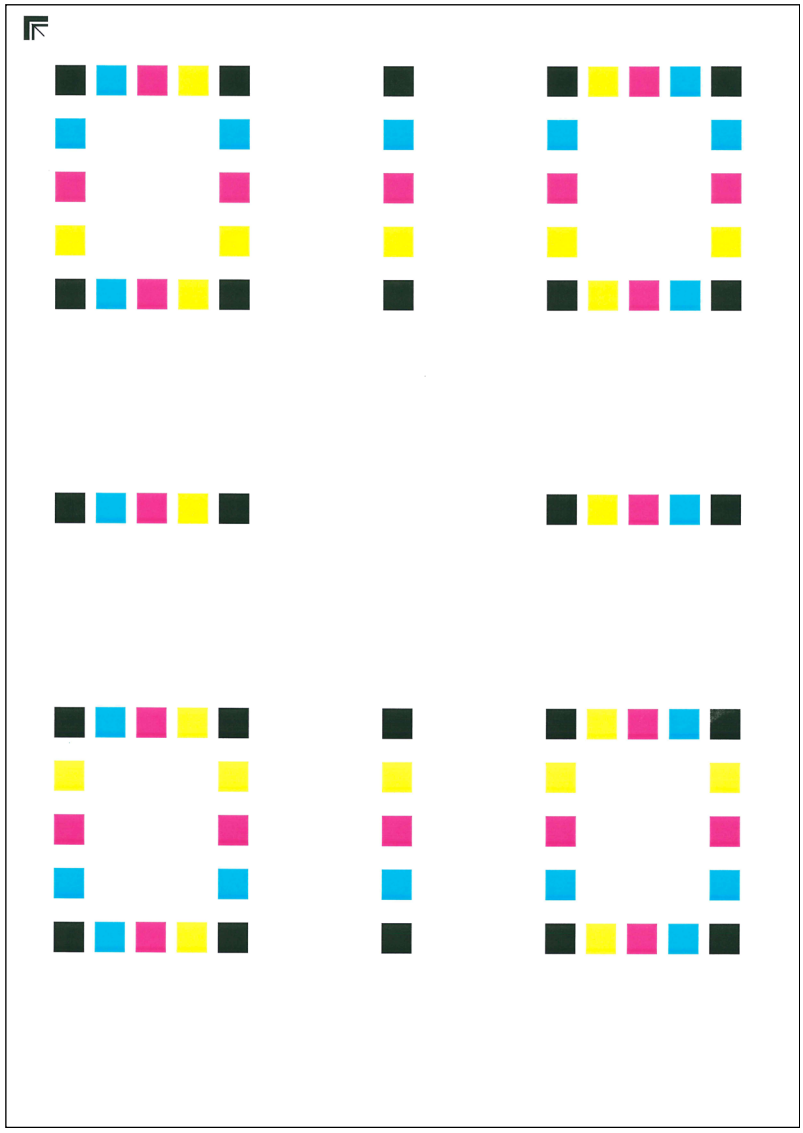

4 Perform the color registration.

1 As shown in the illustration, place the printed side down on the platen with the edge with the arrows toward the back.

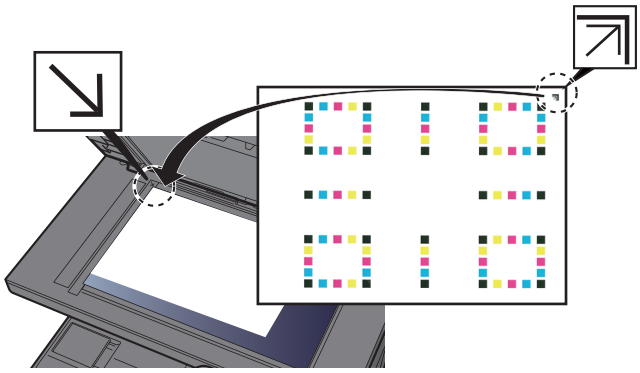

2 Select [**Start**] to scan the chart.

When scanning is finished, color printing position correction starts.

3 When color printing position correction ends, Select [**OK**].

Manual Correction

1 Load paper.

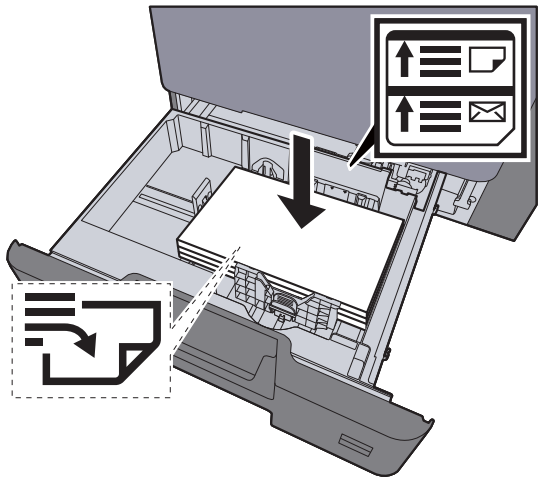

IMPORTANT

- **Load the paper with the print side facing up.**
- **After removing new paper from its packaging, fan the paper before loading it in the multi-purpose tray.**

Loading in the Cassettes (page 3-4)

- **Before loading the paper, be sure that it is not curled or folded. Paper that is curled or folded may cause paper jams.**
- **Ensure that the loaded paper does not exceed the level indicator (see illustration above).**
- **If paper is loaded without adjusting the paper length guide and paper width guide, the paper may skew or become jammed.**

2 Display the screen.

[**System Menu/Counter**] key > [**Adjustment/Maintenance**] > [**Color Registration**] > [**Manual**]

3 Print the chart.

Select [**Print Chart**].

A chart is printed. On the chart, for each of M (magenta), C (cyan) and Y (yellow), charts for H-1 to 5 and V-1 to 5 are printed.

Chart Example

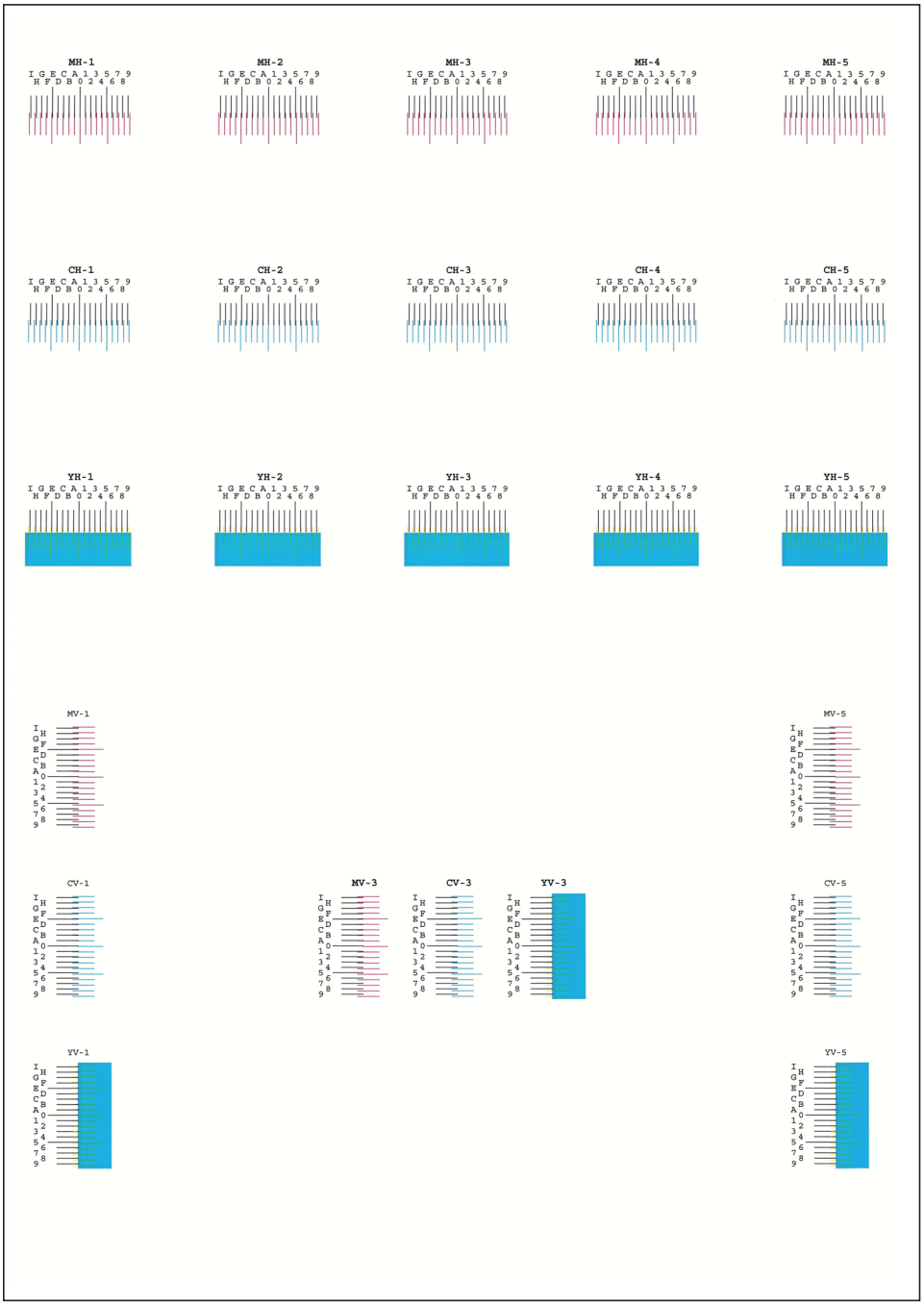

4 Enter the appropriate value.

1 Find the location on each chart where 2 lines most closely match. If this is the 0 position, registration for that color is not required. For the illustration, B is the appropriate value.

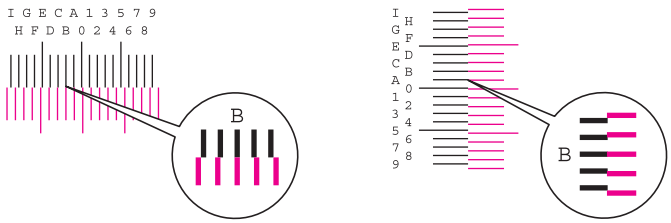

From charts H-1 to H-5, read the values from H-1 to H-5.

From charts V-1 to V-5, read only the values from V-3 (center).

2 [**Detail**] > [**Registration**]

3 Select the chart to be corrected.

4 Select [**+**] or [**-**] to enter the values read from the chart.

Select [**+**] to increase the value from 0 to 9. To decrease, select [**-**].

By selecting [**-**], the value changes from 0 to alphabetic letters, going from A to I. To move in the reverse direction, select [**+**].

You cannot use the numeric keys to enter these values.

5 Repeat steps 3 and 4 to enter the registration values for each chart.

6 Select [**Start**] after all values have been entered. Color registration begins.

7 Select [**OK**] after color registration is complete.

Tone Curve Adjustment

After prolonged use, or from the effects of surrounding temperature or humidity, the printed output tone may differ from the original. Perform this function to ensure consistency with the original tone. Before executing Tone Curve Adjustment, execute calibration. If calibration does not improve the tones, perform Tone Curve Adjustment.

Calibration (page 10-37)

NOTE

To perform tone curve adjustment, verify that either Letter or A4 paper is loaded into a cassette.

A total of 3 pattern pages (No. 1 to 3) are printed during adjustment. The printed patterns are read sequentially during the adjustment.

1 Display the screen.

[**System Menu/Counter**] key > [**Adjustment/Maintenance**] > [**Tone Curve Adjustment**]

2 Adjust the tone curve.

1 Select [**Start**]. A pattern is printed.

Check that the number "1" is printed at the bottom of the pattern.

2 As shown in the illustration, place the printed side down on the platen with the edge with the arrows toward the back.

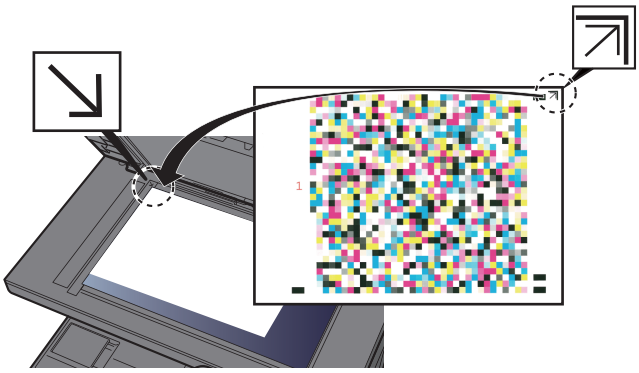

3 Select [**Start**]. The pattern is read and adjustment begins.

The second pattern is output.

4 Check that the number "2" is printed at the bottom of the pattern and repeat steps 2 to 3 twice to read patterns 2 and 3 in sequence.

5 Select [**OK**] in the adjustment end confirmation screen.

Drum Refresh

Remove image blur and white dots from the printout.

NOTE
Drum Refresh cannot be performed while printing. Execute Drum Refresh after the printing is done.

1 Display the screen.

[**System Menu/Counter**] key > [**Adjustment/Maintenance**] > [**Drum Refresh**]

2 Perform the drum refresh.

Select [**Start**]. "Drum Refresh" begins.

Calibration

Using this function enables printing in the most appropriate color by adjusting hue and color drift in detail.

1 Display the screen.

[**System Menu/Counter**] key > [**Adjustment/Maintenance**] > [**Calibration**]

2 Perform the calibration.

Select [**Start**]. "Calibration" begins.

NOTE

When the hue and color drift are not enhanced even after performing calibration, refer to the following:

Color Registration Procedure (page 10-30)

Laser Scanner Cleaning

Remove vertical lines from the printout.

1 Display the screen.

[**System Menu/Counter**] key > [**Adjustment/Maintenance**] > [**Laser Scanner Cleaning**]

2 Perform the laser scanner cleaning.

Select [**Start**]. "Laser Scanner Cleaning" begins.

Clearing Paper Jams

If a paper jam occurs, the touch panel will display "Paper Jam." and the machine will stop. Refer to these procedures to remove the jammed paper.

Jam Location Indicators

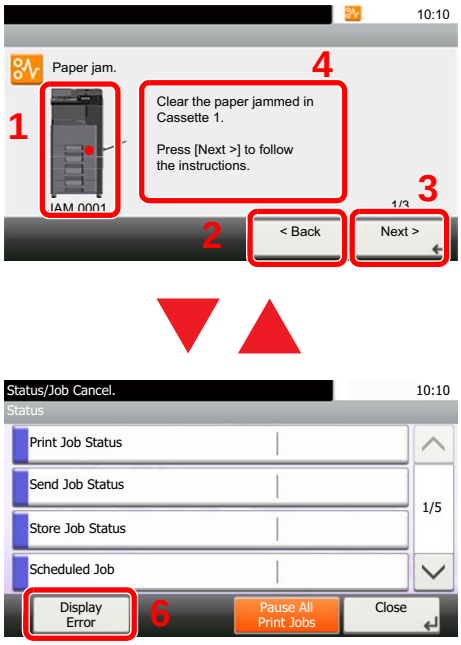

1 Shows the location of a paper jam.

2 Shows the previous step.

3 Shows the next step.

4 Shows the removal procedure.

5 Selecting [**Status/Job Cancel**] key displays [**Hold**]. Selecting [**Hold**] displays status screen, and the status of jobs can be checked.

6 Select [**Display Error**] to return to the paper jam guidance.

If a paper jam occurs, the location of the jam will be displayed on the touch panel as well as the clearing instructions.

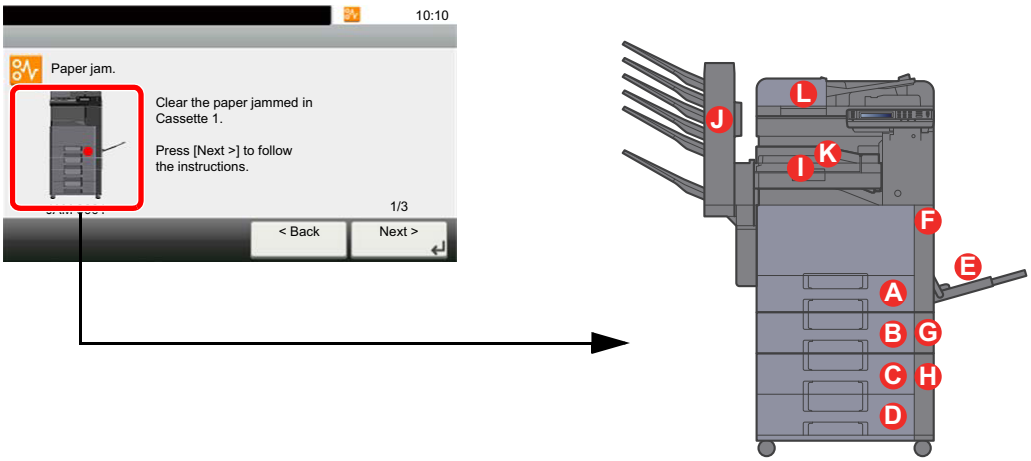

Paper Jam Location Indicator	Paper Jam Location	Reference Page
A	Cassette 1	page 10-40
B	Cassette 2	page 10-40
C	Cassette 3 (500-sheet x 2)	page 10-41
	Cassette 3 (2000-sheet x 1)	page 10-43
D	Cassette 4 (500-sheet x 2)	page 10-45
E	Multi Purpose Tray	page 10-47
F	Right Cover 1	page 10-48

Paper Jam Location Indicator	Paper Jam Location	Reference Page
G	Right Cover 2	page 10-51
H	Right Cover 3	page 10-52 page 10-53
I	Bridge Unit	page 10-54
J	Mailbox	page 10-55
K	Inner Finisher	page 10-56
L	Document Processor	page 10-57

After you remove the jam, the machine will warm up again and the error message will be cleared. The machine resumes with the page that was printing when the jam occurred.

Remove any jammed paper in Cassette 1 and 2

Procedures for handling a paper jam in Cassettes 1 and 2 are all the same. Here, we'll explain the procedures for cassette 1, as an example.

CAUTION

- **Do not reuse jammed papers.**
- **If the paper tears during removal, be sure to remove any loose scraps of paper from inside the machine. Scraps of paper left in the machine could cause subsequent jamming.**

1 Pull Cassette 1 out toward you until it stops.

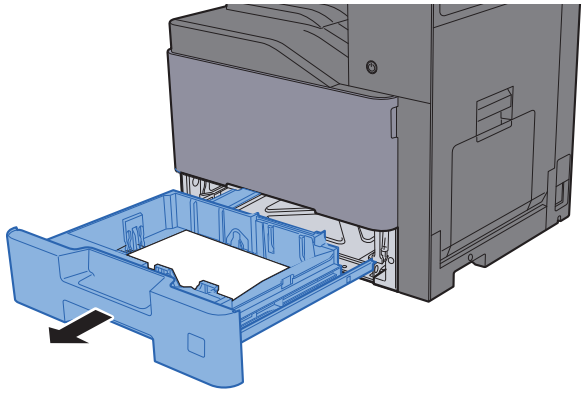

2 Remove any jammed paper.

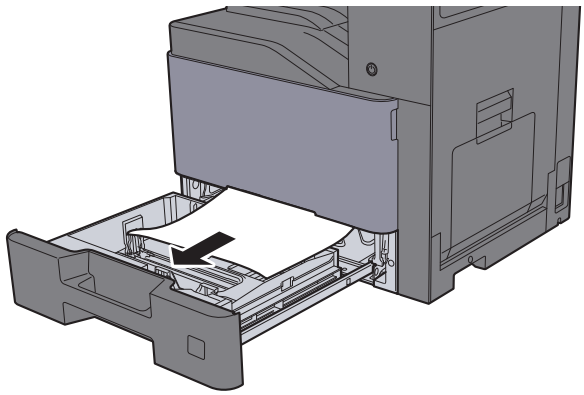

NOTE

To remove paper which is difficult to get access to, the cassette can be removed.

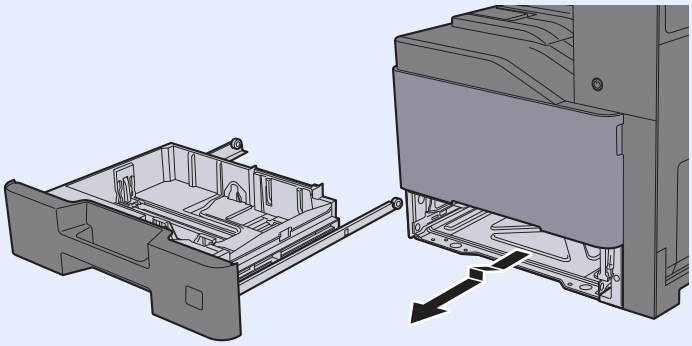

3 Push Cassette 1 back in.

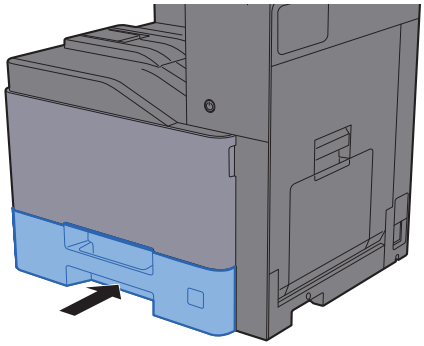

Remove any jammed paper in Cassette 3 (500-sheet x 2)

See the explanation for Cassette 3 below.

1 Open Right Cover 2.

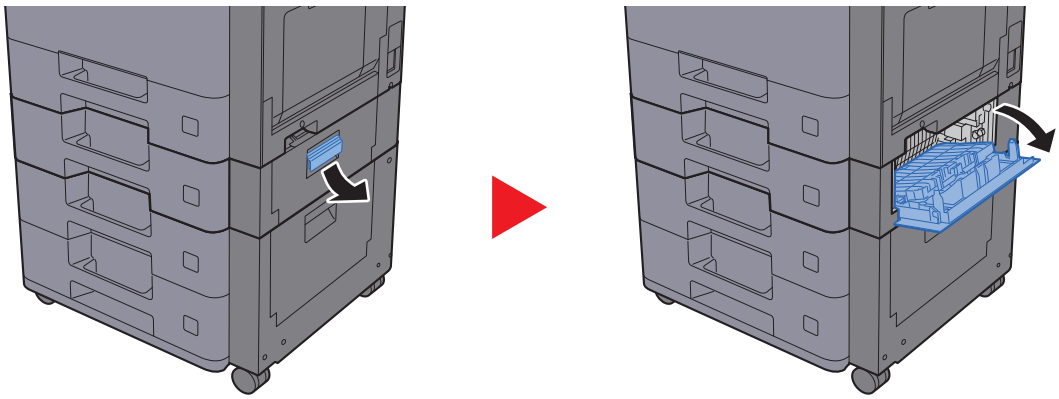

2 Remove any jammed paper.

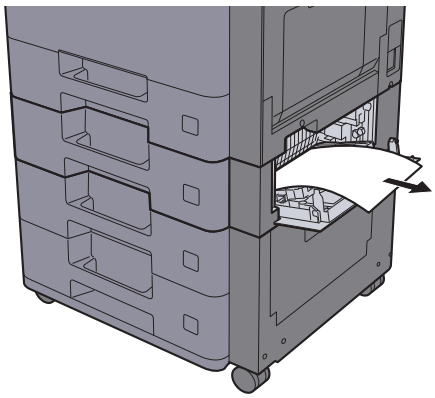

3 Pull Cassette 3 out toward you until it stops.

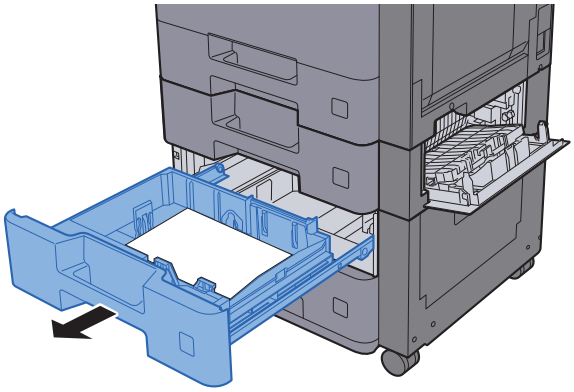

4 Remove any jammed paper.

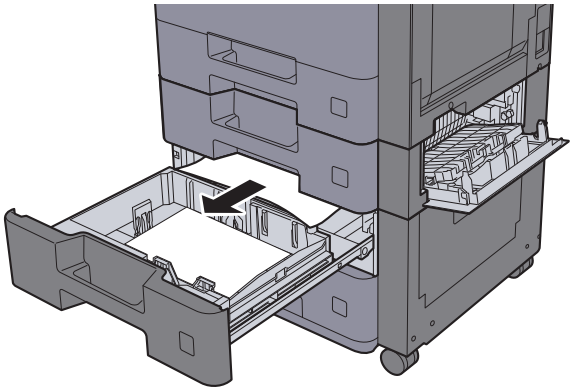

NOTE

To remove paper which is difficult to get access to, the cassette can be removed.

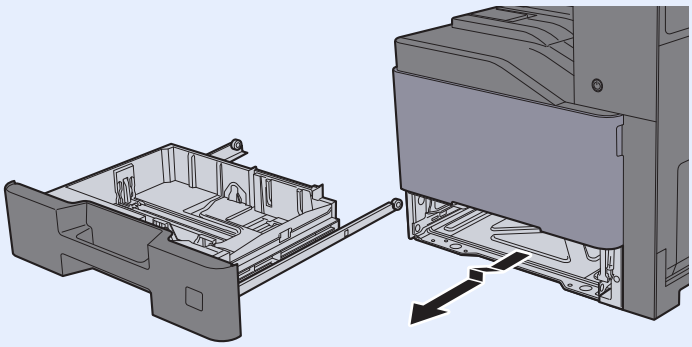

5 Push Right Cover 2 and Cassette 3 back in.

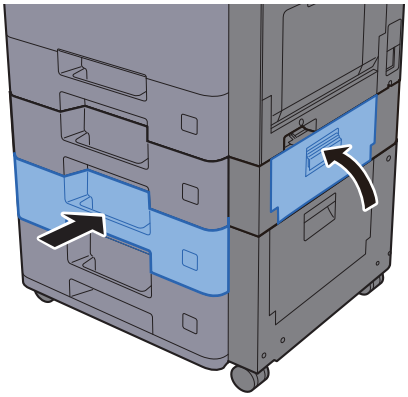

Remove any jammed paper in Cassette 3 (2,000-sheet x 1)

See the explanation for Cassette 3 below.

1 Open Right Cover 2.

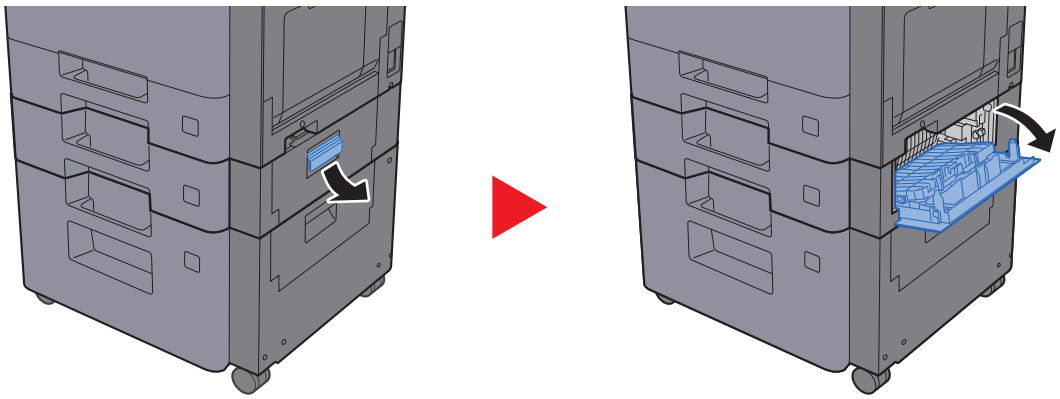

2 Remove any jammed paper.

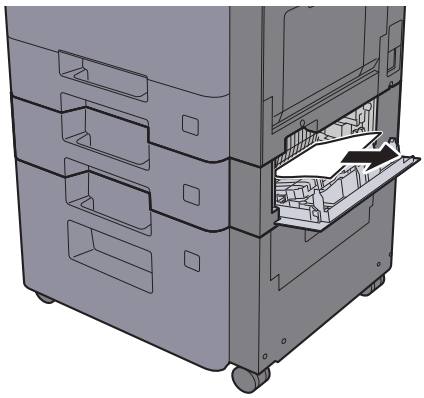

3 Pull Cassette 3 out toward you until it stops.

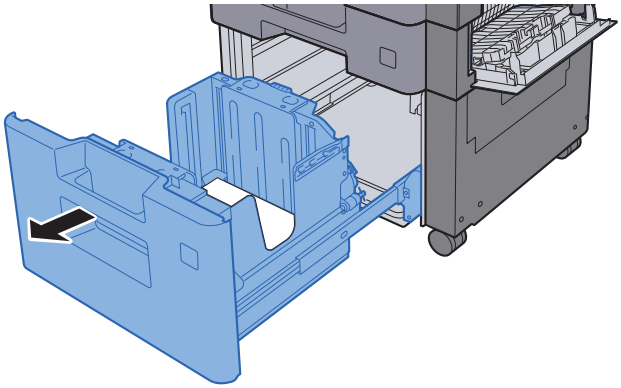

4 Remove any jammed paper.

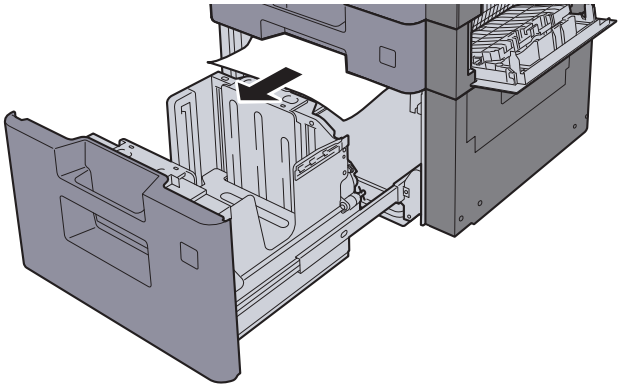

5 Push Right Cover 2 and Cassette 3 back in.

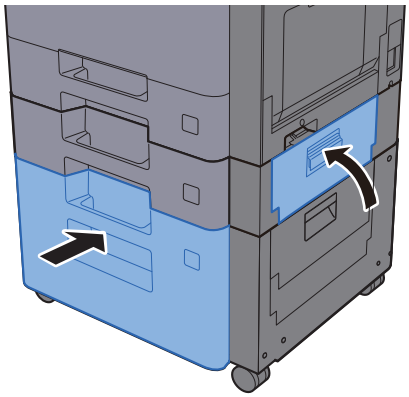

Remove any jammed paper in Cassette 4 (500-sheet x 2)

See the explanation for Cassette 4 below.

CAUTION

- **Do not reuse jammed papers.**
- **If the paper tears during removal, be sure to remove any loose scraps of paper from inside the machine. Scraps of paper left in the machine could cause subsequent jamming.**

1 Open Right Cover 3.

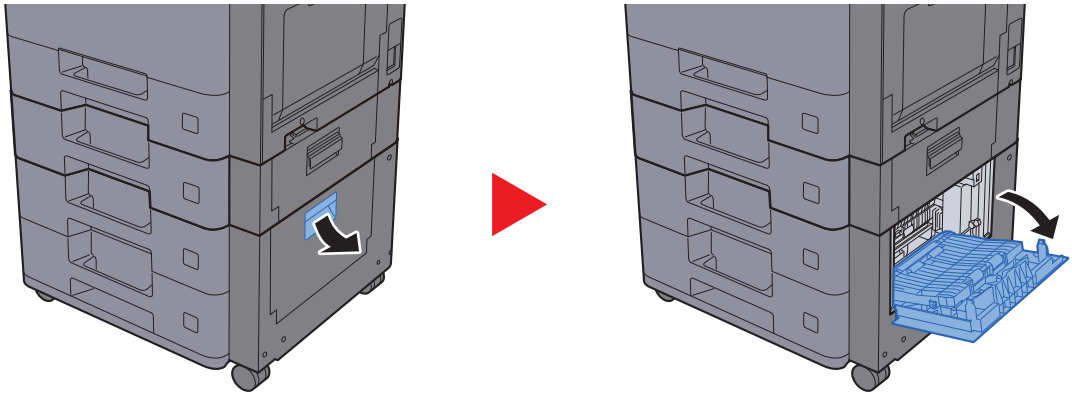

2 Remove any jammed paper.

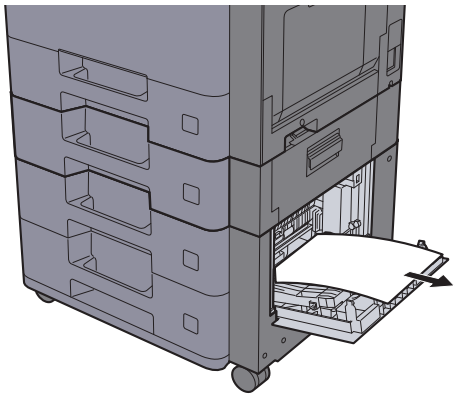

3 Pull Cassette 4 out toward you until it stops.

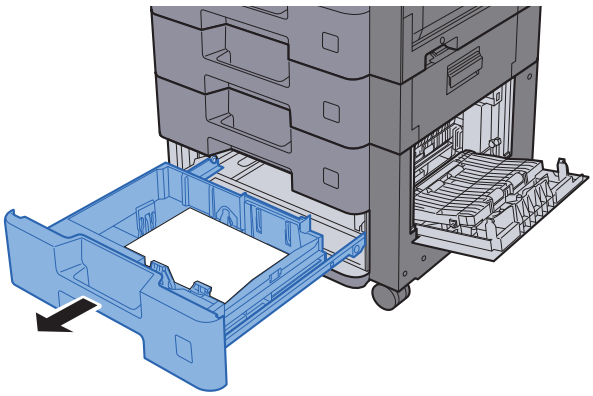

4 Remove any jammed paper.

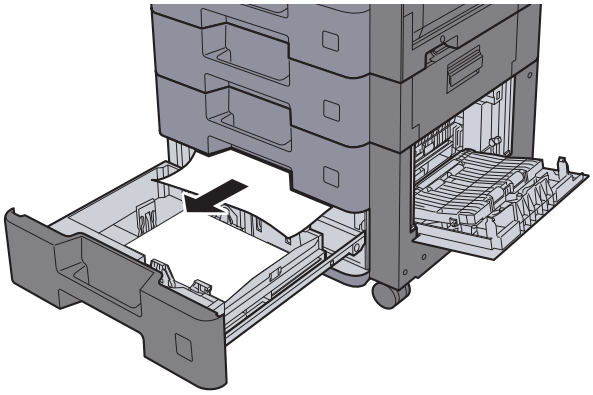

NOTE

To remove paper which is difficult to get access to, the cassette can be removed.

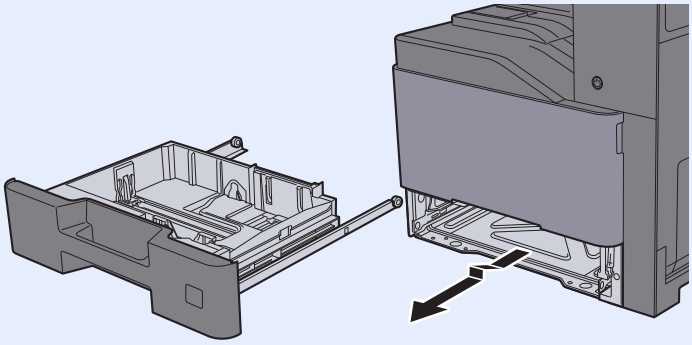

5 Push Right Cover 3 and Cassette 4 back in.

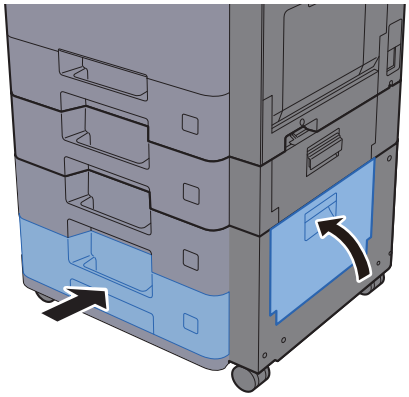

Remove any jammed paper in the Multi Purpose Tray

See the explanation for the Multi Purpose Tray below.

CAUTION

- **Do not reuse jammed papers.**
- **If the paper tears during removal, be sure to remove any loose scraps of paper from inside the machine. Scraps of paper left in the machine could cause subsequent jamming.**

1 Remove any jammed paper.

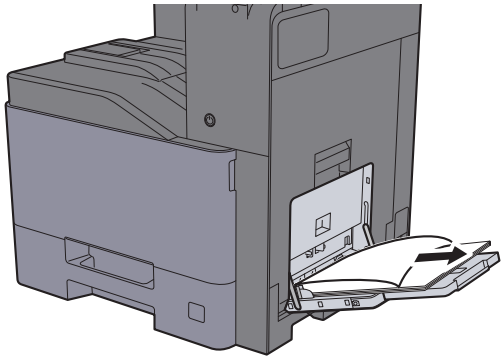

2 Remove all the paper.

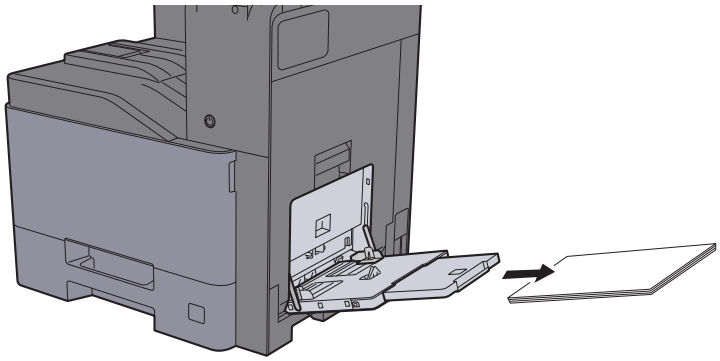

3 Reload the paper.

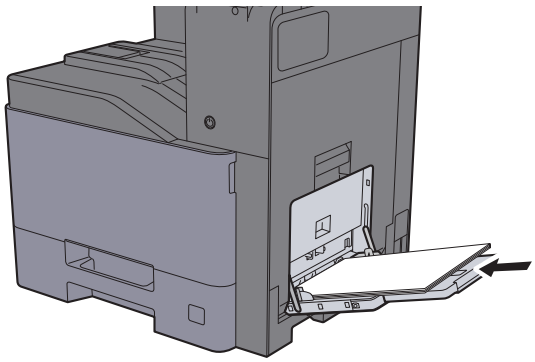

Remove any jammed paper in Right Cover 1

See the explanation for Right Cover 1 below.

CAUTION

The fixing unit is extremely hot. Take sufficient care when working in this area, as there is a danger of getting burned.

1 Open Right Cover 1.

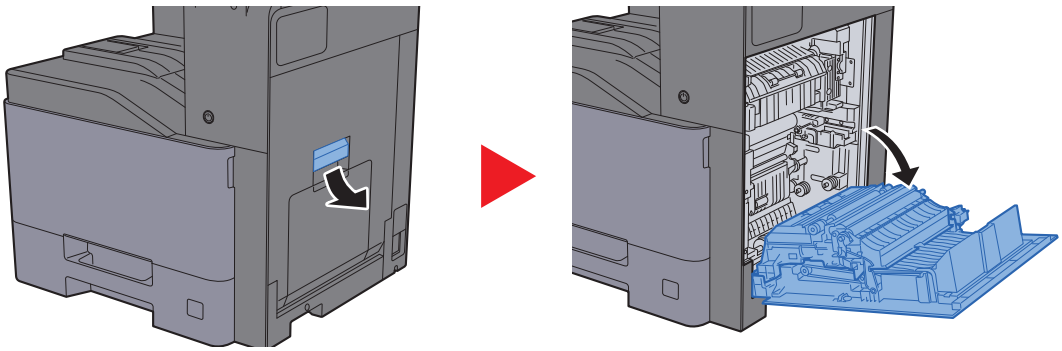

2 Remove any jammed paper.

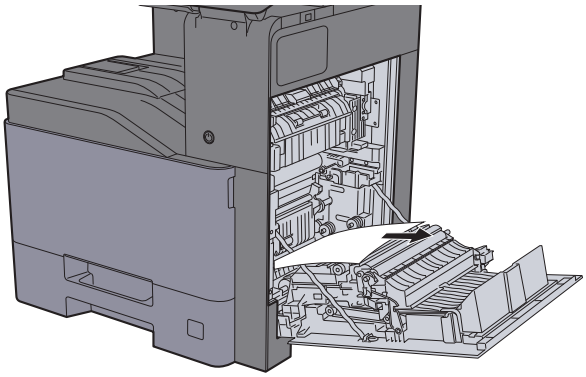

3 Open the cover (A1).

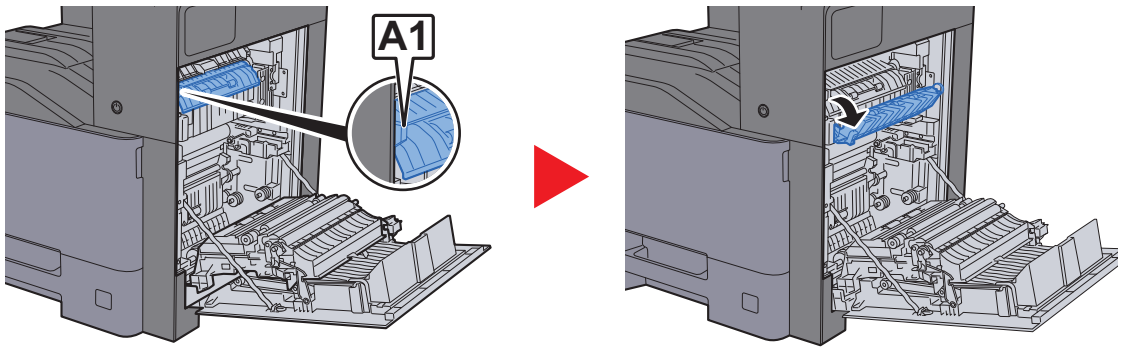

4 Remove any jammed paper.

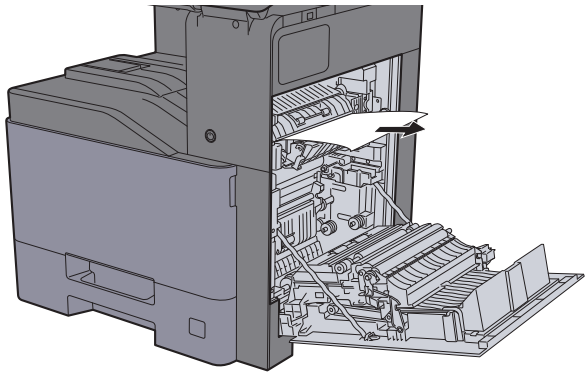

5 Open the cover (A2).

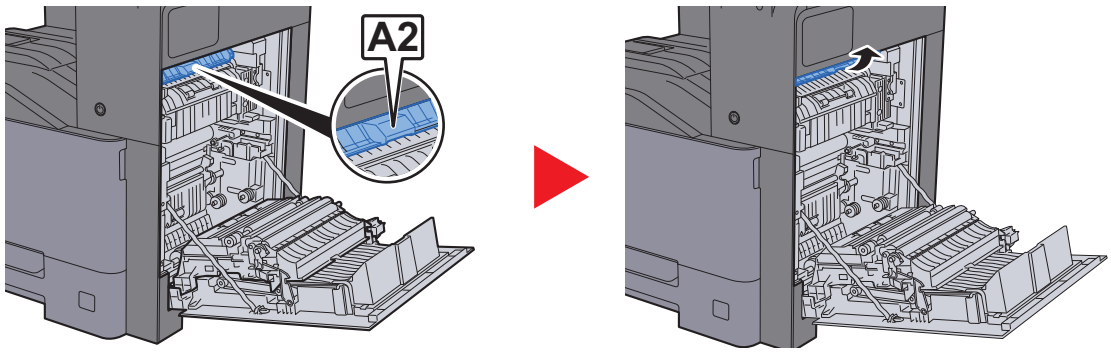

6 Remove any jammed paper.

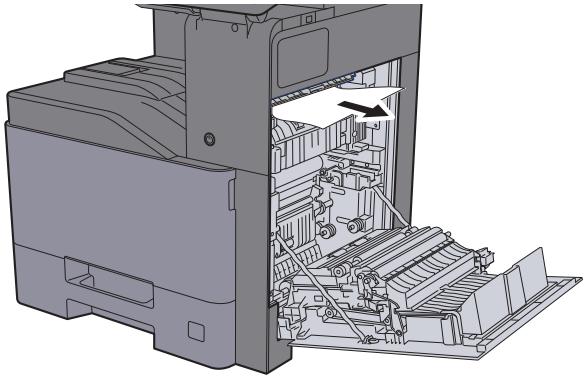

7 Open the duplex unit (A3).

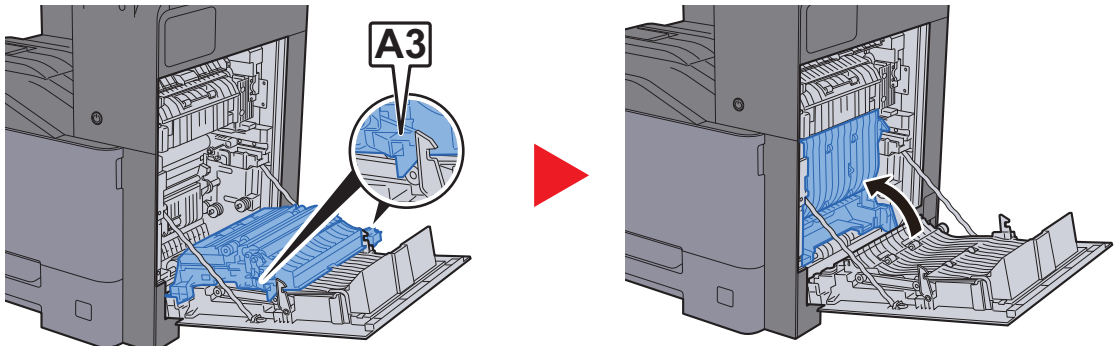

8 Remove any jammed paper.

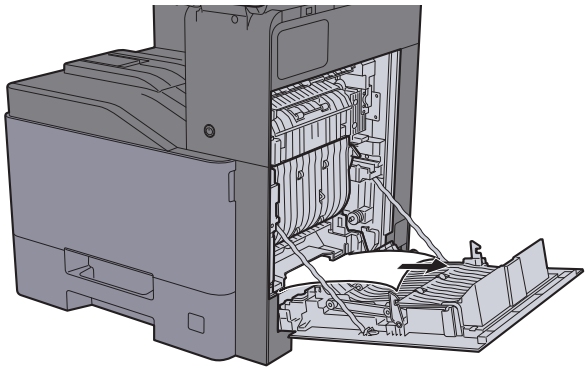

9 Push Right Cover 1.

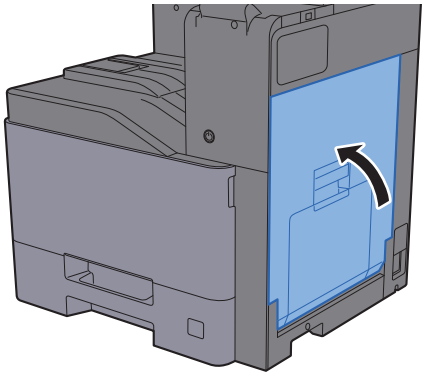

Remove any jammed paper in Right Cover 2

See the explanation for Right Cover 2 below.

CAUTION

- **Do not reuse jammed papers.**
- **If the paper tears during removal, be sure to remove any loose scraps of paper from inside the machine. Scraps of paper left in the machine could cause subsequent jamming.**

1 Open Right Cover 2.

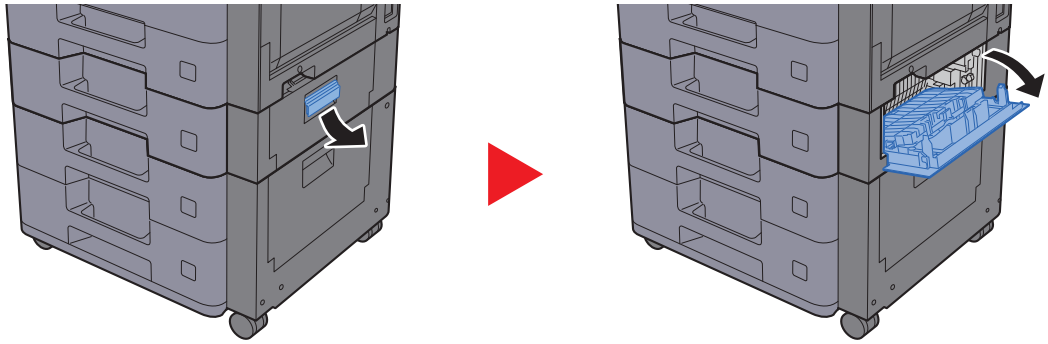

2 Remove any jammed paper.

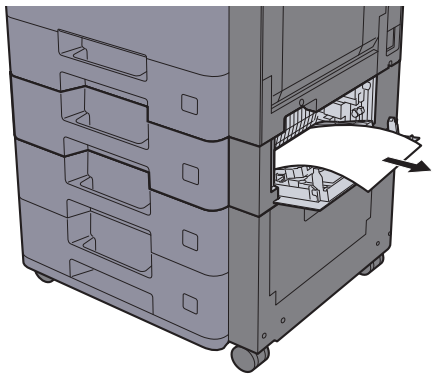

3 Push Right Cover 2.

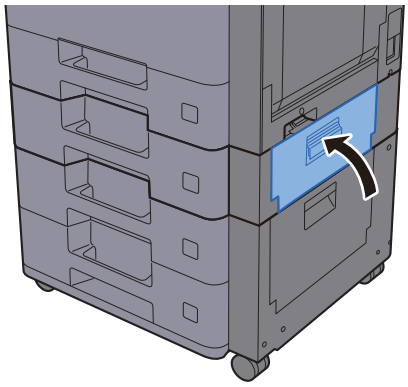

Remove any jammed paper in Right Cover 3 (500-sheet x 2)

See the explanation for Right Cover 3 below.

CAUTION

- **Do not reuse jammed papers.**
- **If the paper tears during removal, be sure to remove any loose scraps of paper from inside the machine. Scraps of paper left in the machine could cause subsequent jamming.**

1 Open Right Cover 3.

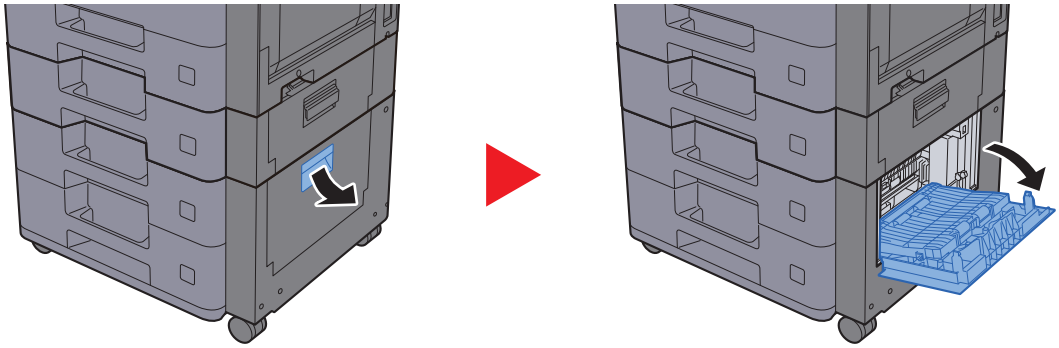

2 Remove any jammed paper.

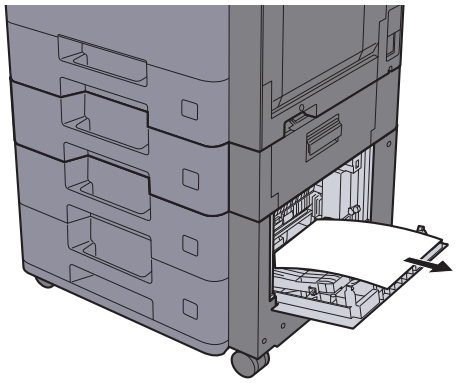

3 Push Right Cover 3.

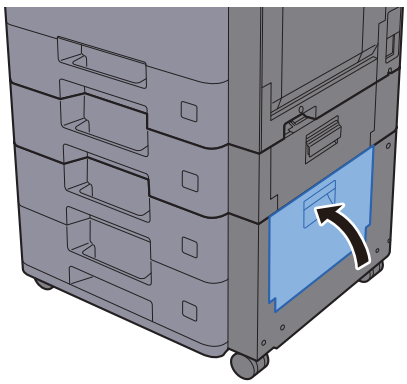

Remove any jammed paper in Right Cover 3 (2,000-sheet x 1)

See the explanation for Right Cover 3 below.

CAUTION

- **Do not reuse jammed papers.**
- **If the paper tears during removal, be sure to remove any loose scraps of paper from inside the machine. Scraps of paper left in the machine could cause subsequent jamming.**

1 Open Right Cover 3.

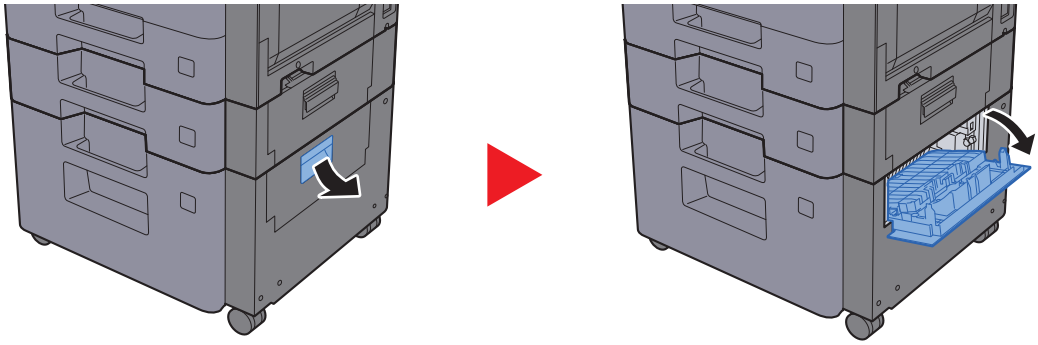

2 Remove any jammed paper.

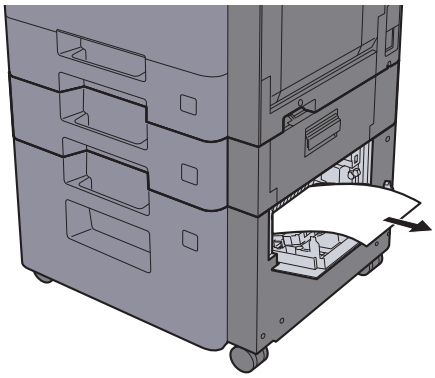

3 Push Right Cover 3.

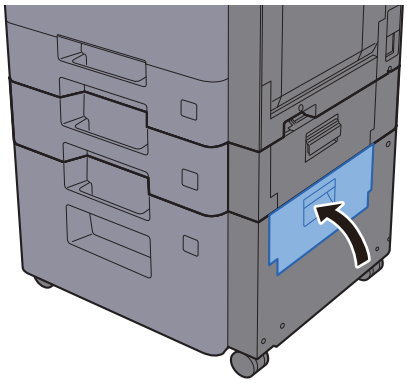

Remove any jammed paper in the Bridge Unit

See the explanation for the Bridge Unit below.

CAUTION

- **Do not reuse jammed papers.**
- **If the paper tears during removal, be sure to remove any loose scraps of paper from inside the machine. Scraps of paper left in the machine could cause subsequent jamming.**

1 Open the cover.

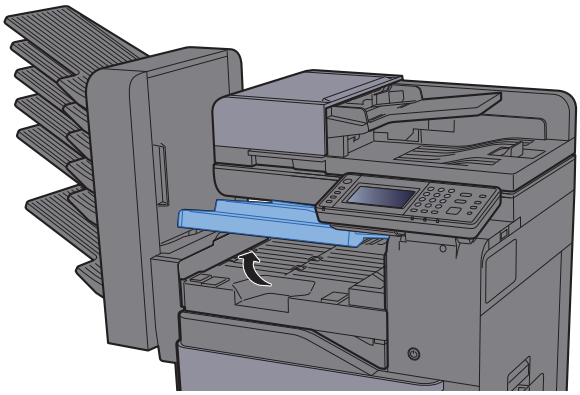

2 Remove any jammed paper.

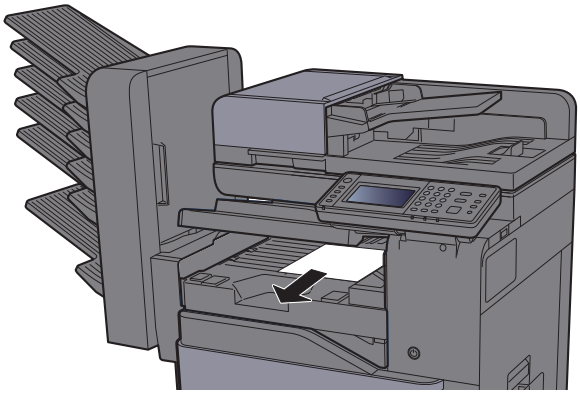

3 Close the cover.

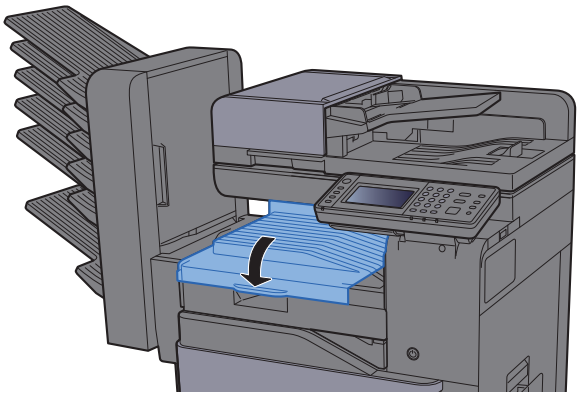

Remove any jammed paper in the Mailbox

See the explanation for the Mailbox below.

CAUTION

- **Do not reuse jammed papers.**
- **If the paper tears during removal, be sure to remove any loose scraps of paper from inside the machine. Scraps of paper left in the machine could cause subsequent jamming.**

1 Open the cover.

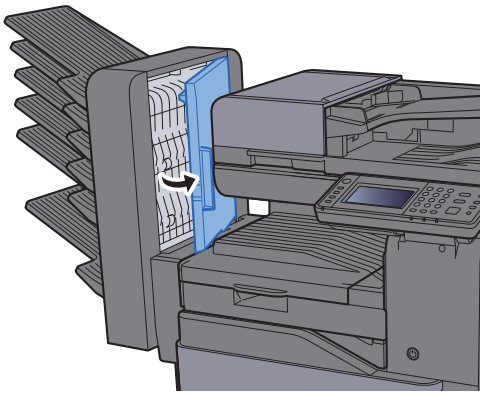

2 Remove any jammed paper.

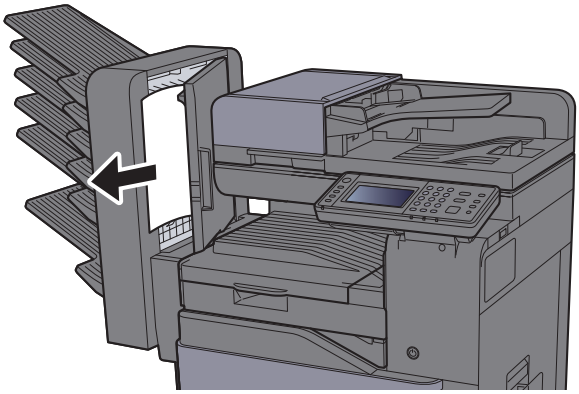

3 Close the cover.

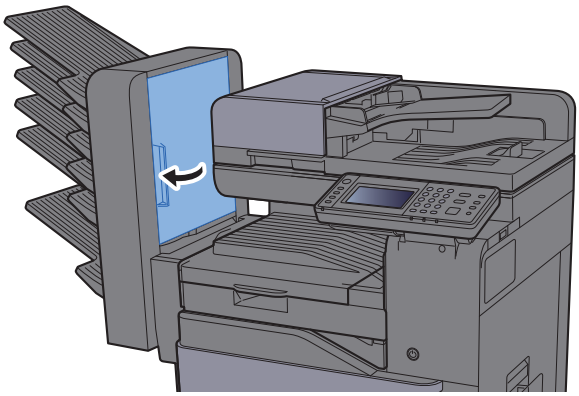

Remove any jammed paper in the Inner Finisher

See the explanation for the Inner Finisher below.

CAUTION

- **Do not reuse jammed papers.**
- **If the paper tears during removal, be sure to remove any loose scraps of paper from inside the machine. Scraps of paper left in the machine could cause subsequent jamming.**

1 Open the inner finisher unit.

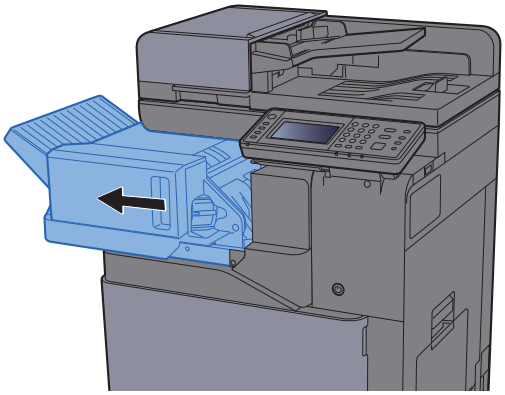

2 Remove any jammed paper.

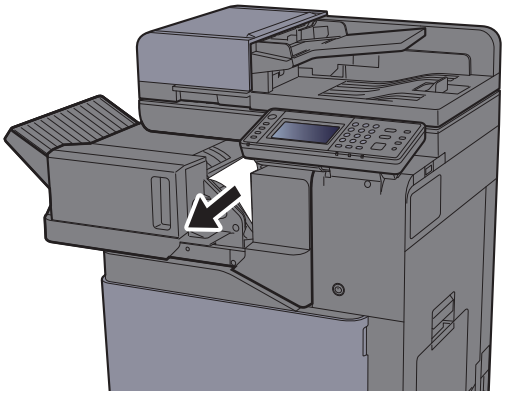

3 Return the unit to the original position.

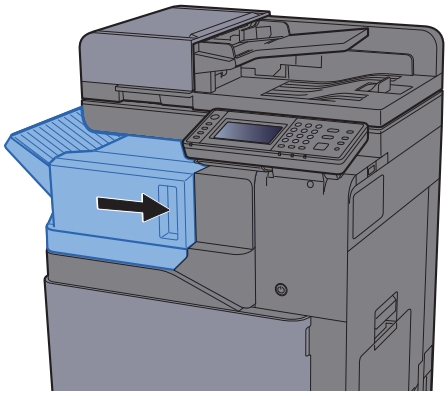

Remove any jammed paper in the Document Processor

See the explanation for the Document Processor below.

CAUTION

- **Do not reuse jammed papers.**
- **If the paper tears during removal, be sure to remove any loose scraps of paper from inside the machine. Scraps of paper left in the machine could cause subsequent jamming.**

1 Remove the originals from the Original Table.

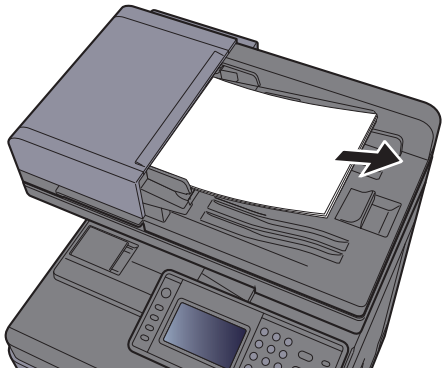

2 Open the front cover and remove any jammed paper.

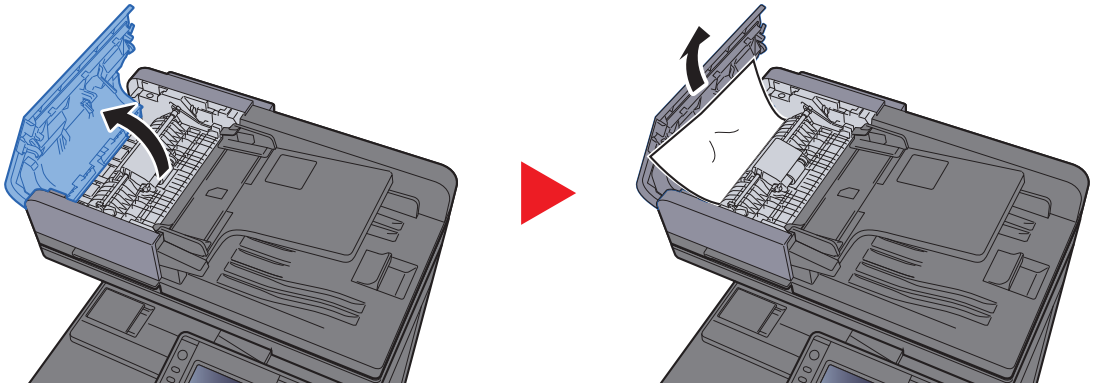

3 Open Reverse Unit (F) and remove any jammed paper from the Original Eject Table.

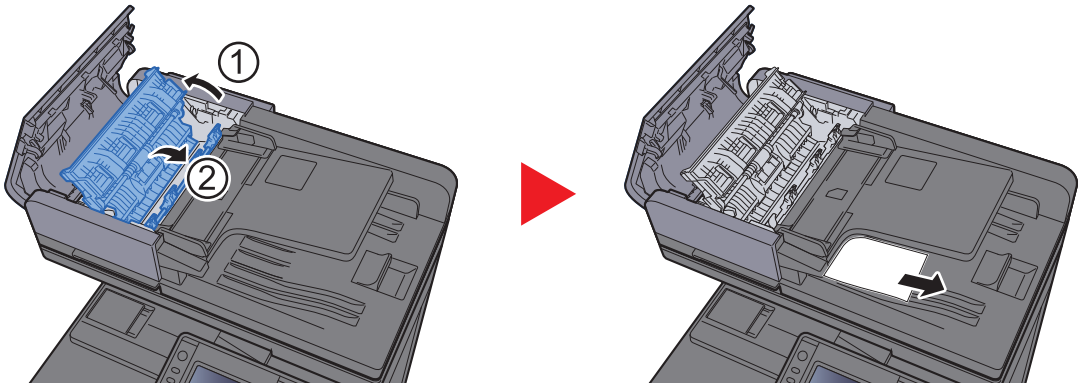

4 Remove the originals from the reverse unit.

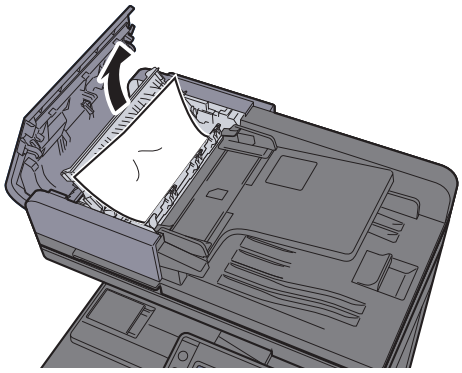

5 Remove originals inside the document processor.

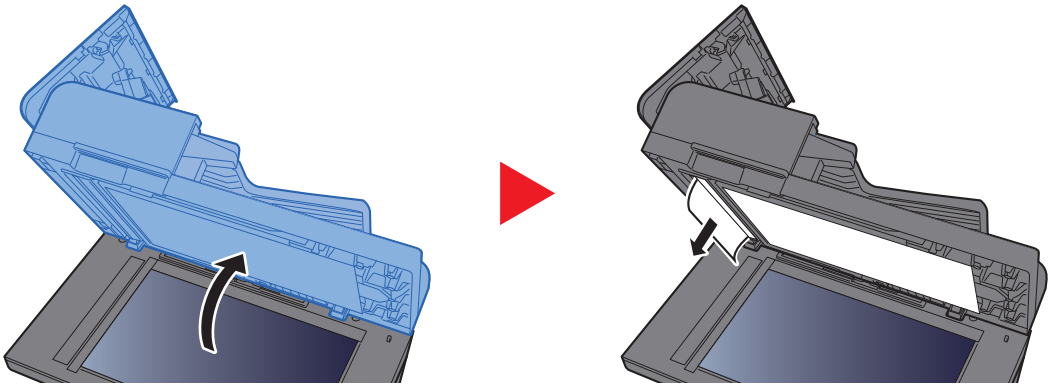

6 Push the cover.

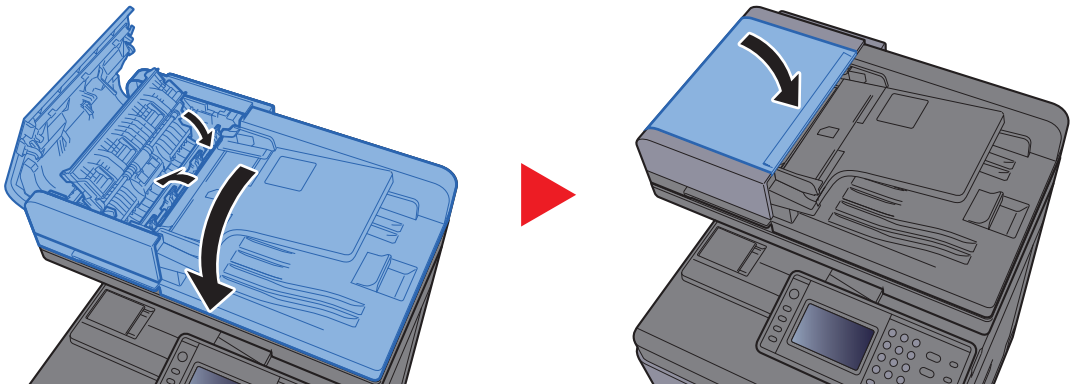

Clearing a Staple Jam

Clearing a staple jam

1 Open the inner finisher unit.

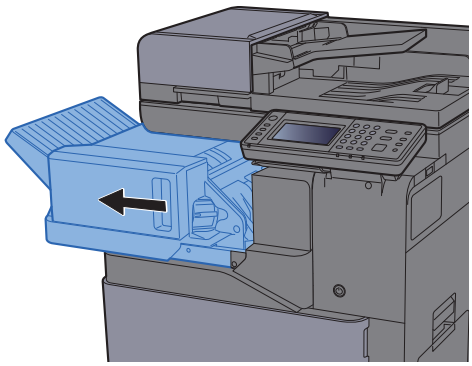

2 Remove the Staple Cartridge Holder.

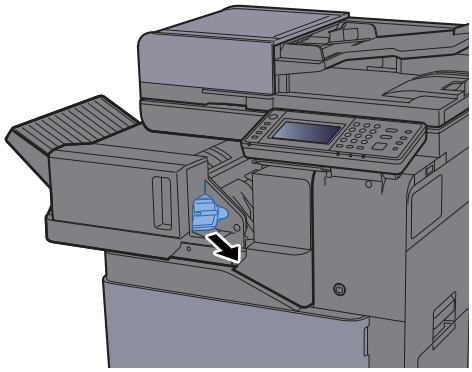

3 Remove the jammed staple.

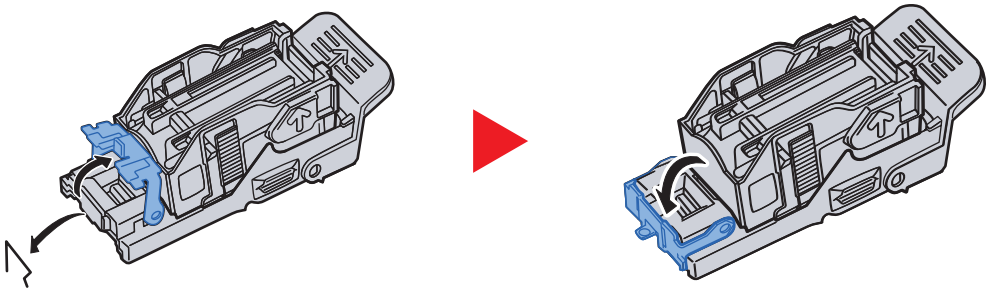

4 Install the Staple Cartridge Holder.

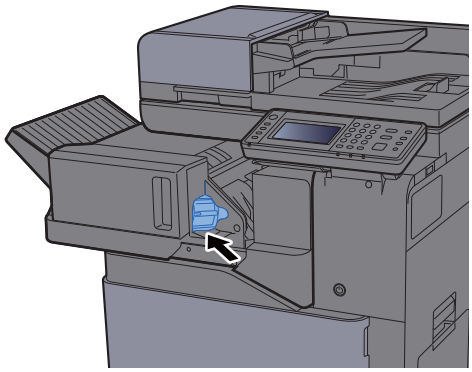

5 Return the unit to the original position.

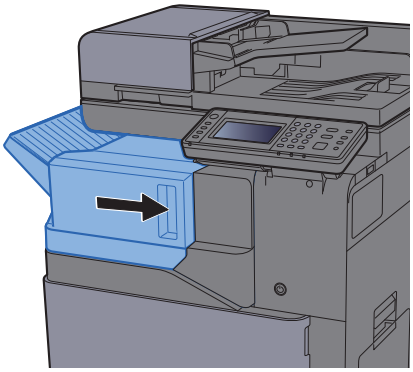

11 Appendix

This chapter explains the following topics:

- Optional Equipment 11-2
  - Overview of Optional Equipment 11-2
  - Optional Applications 11-6
- Character Entry Method 11-8
  - Entry Screens 11-8
  - Entering Characters 11-10
- Paper 11-11
  - Basic Paper Specifications 11-11
  - Choosing the Appropriate Paper 11-12
  - Special Paper 11-15
- Specifications 11-19
  - Machine 11-19
  - Copy Functions 11-21
  - Printer Functions 11-21
  - Scanner Functions 11-22
  - Document Processor 11-22
  - Paper Feeder (500-sheet) 11-23
  - Paper Feeder (500-sheet x 2) 11-23
  - Paper Feeder (2,000-sheet) 11-23
  - Inner Finisher 11-24
  - Mailbox 11-24
  - Job separator 11-25
- Glossary 11-26

Optional Equipment

Overview of Optional Equipment

The following optional equipment is available for the machine.

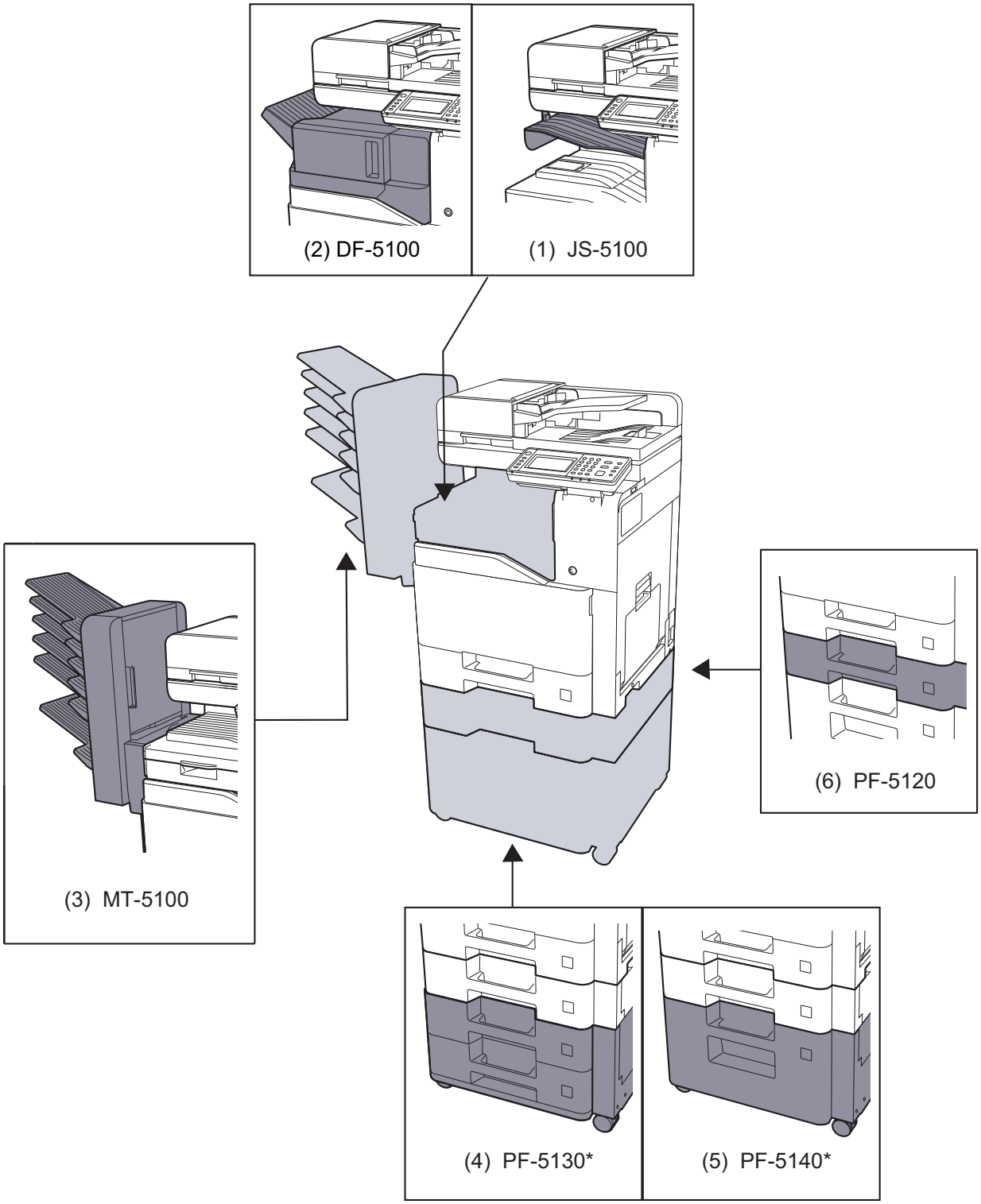

* If PF-5130 or PF-5140 is installed, toppling prevention kit must be installed.

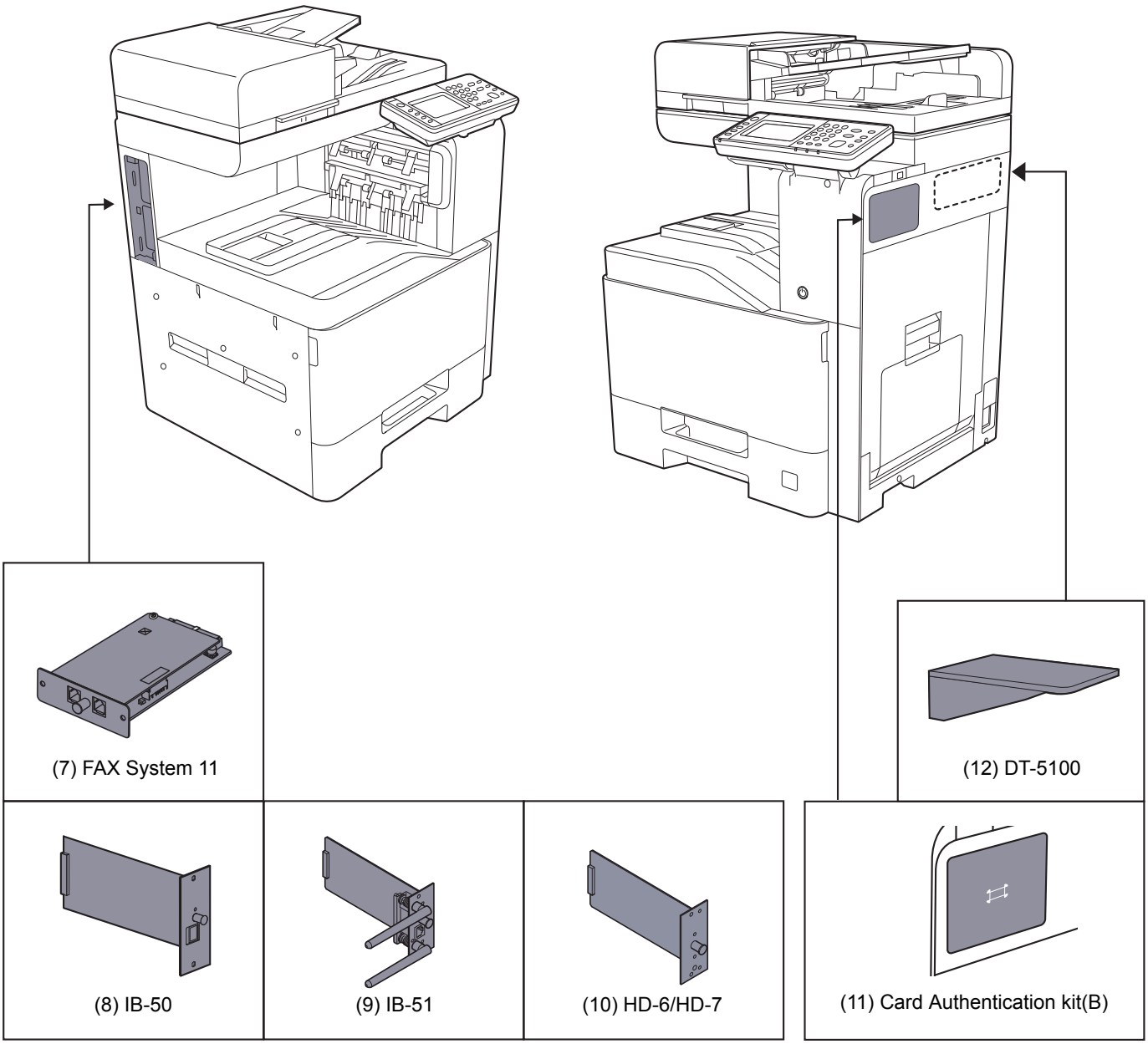

Software option
(13) UG-33
(14) Data Security kit(E)

(15) USB Keyboard
(16) Expansion Memory
(17) SD/SDHC Memory Card

(1) JS-5100 "Job Separator"

Separate paper according to output tray for easier sorting. Specify as the output tray for copy or print jobs. Or, specify as the default output tray for printing from the copy or Document Box screen, printing from the PC, and printing of the received fax data.

NOTE

To ensure that paper is delivered to the Job Separator, select the output destination or change the default setting.

Paper Output (page 6-15)

The busy light stays on until the output is removed from the Job Separator.

(2) DF-5100 "Inner Finisher"

This is a large-capacity document finisher capable of holding large print runs and of separating and offsetting multiple copies of a printout into individual copies. It can also staple the offset printouts.

(3) MT-5100 "Mailbox"

Makes it easy to sort output into separate trays. Installing this option adds 6 output trays. When multiple computer users share the printer, each user can print to a specified tray.

NOTE

To deliver output to the mail box, change the Paper Output selection on the operation panel or in the printer driver, or change in the default settings.

Paper Output (page 6-15)

(4) PF-5130 "Paper Feeder (500-sheet x2)"

Two additional cassettes identical to the printer's cassette can be installed in the printer. Paper capacity and loading method are the same as the standard cassettes.

Loading in the Cassettes (page 3-4)

(5) PF-5140 "Large Capacity Feeder (2,000-sheet)"

In addition to the printer's cassettes, you can also install an optional large capacity feeder (2,000-sheet) capable of holding up to 2,000 sheets of A4, B5 or Letter paper.

Loading in the Large Capacity Feeder (page 3-8)

(6) PF-5120 "Paper Feeder (500-sheet)"

One additional cassettes identical to the printer's cassette can be installed in the printer. Paper capacity and loading method are the same as the standard cassettes.

Loading in the Cassettes (page 3-4)

(7) FAX System 11 "FAX Kit"

By installing the FAX kit, fax send/receive is enabled. Also, it is possible to use it as a network fax, by using it with a computer.

FAX System 11 Operation Guide

(8) IB-50 "Network Interface Kit"

The Network Interface Kit provides a high-speed connection for the Gigabit-per-second interface. Settings are possible for a variety of OS and network protocols.

IB-50 User's Manual

(9) IB-51 "Wireless Network Interface Kit"

This is a wireless LAN interface card which supports the wireless LAN specifications IEEE802.11n (Max 300 Mbps) and 11 g/b.

With the utilities supplied, settings are possible for a variety of OS and network protocols.

IB-51 User's Manual

(10) HD-6/HD-7 "SSD"

With SSD installed in the machine, received data can be rasterized and stored on this SSD. This enables high-speed printing of multiple copies using an electric sort function. Also, you can use the Document Box functions.

Printing Documents in Custom Box (page 5-46)

(11) Card Authentication Kit(B) "Card Authentication Kit"

User login administration can be performed using ID cards. To do so, it is necessary to register ID card information on the previously registered local user list. For more information about how to register this information, refer to the following:

Card Authentication Kit(B) Operation Guide

(12) DT-5100 "Document Table"

Place original or other documents when using the machine.

(13) UG-33 "ThinPrint Option"

This application allows print data to be printed directly without a print driver.

(14) Data Security Kit(E) "Data Security Kit"

The Data Security Kit overwrites all unnecessary data in the storage area so that it cannot be retrieved. The Data Security Kit encrypts data before storing it in the SSD. It guarantees higher security because no data cannot be decoded by ordinary output or operations.

(15) USB Keyboard "USB Keyboard"

A USB keyboard can be used to enter information into the text fields on the operation panel. A special mount is also available to install the keyboard on the machine. Please contact your dealer or service representative for information on keyboards that are compatible with your machine before you purchase one.

(16) "Expansion Memory"

The machine can perform the more multiple jobs simultaneously by adding more memories. You can increase the machine's memory up to 2,048 MB by plugging in the optional memory modules.

(17) "SD/SDHC Memory Card"

An SD/SDHC memory card is useful for storing fonts, macros, and overlays. The machine is equipped with a slot for an SDHC memory card with a maximum size of 32 GB, and an SD memory card with a maximum size of 2 GB.

Optional Applications

Overview of the Applications

The applications listed below are installed on this machine.

Application
Data Security Kit
Card Authentication Kit*1
ThinPrint Option*1

*1 This can be used on a trial basis for a limited time.

NOTE

- Restrictions such as the number of times the application can be used during the trial period differ depending on the application.
- If you change the date/time while using the trial version of an application, you will no longer be able to use the application.

Starting Application Use

Use the procedure below to start using an application.

1 [**System Menu/Counter**] key > [**System/Network**] > [**Optional Function**]

NOTE

If the user authentication screen appears, enter your login user name and login password and select [**Login**]. For this, you need to login with administrator privileges. The factory default login user name and login password are set as shown below.

Login User Name: **3000**

Login Password: **3000**

2 Select the desired application and select [**Activate**].

You can view detailed information on the selected application by selecting [ ].

3 Select [**Official**] and enter a license key.

Some applications do not require you to enter a license key. If the license key entry screen does not appear, go to Step 4.

To use the application as a trial, select [**Trial**] without entering the license key.

4 Select [**Yes**] in the confirmation screen.

NOTE

- If you started the Security Kit or Thin Print option and entered the license key, turn the power OFF/ON.
- Icons of activated application are displayed in the Home screen.

Checking Details of Application

Use the procedure below to check the details of application.

1 [**System Menu/Counter**] key > [**System/Network**] > [**Optional Function**]

NOTE

If the user authentication screen appears, enter your login user name and login password and select [**Login**]. For this, you need to login with administrator privileges. The factory default login user name and login password are set as shown below.

Login User Name: **3000**

Login Password: **3000**

2 Select the desired application and select [ ].

You can view detailed information on the selected application.

The table below lists the item you can view.

Item
Function Name
License
Remaining Counts
Expiration Date
Status

Extend the trial period.

[**Extend**] > [**Yes**]

The trial period is extended.

Character Entry Method

To enter characters for a name, use the on-display keyboard in the touch panel following the steps as explained below.

NOTE

Keyboard Layout
"QWERTY", "QWERTZ" and "AZERTY" are available as keyboard layouts the same as a PC keyboard. Select the [**System Menu/Counter**] key, [**Common Settings**] and then [**Keyboard Layout**] to choose the desired layout. "QWERTY" layout is used here as an example. You may use another layout following the same steps.

Entry Screens

Lower-case Letter Entry Screen

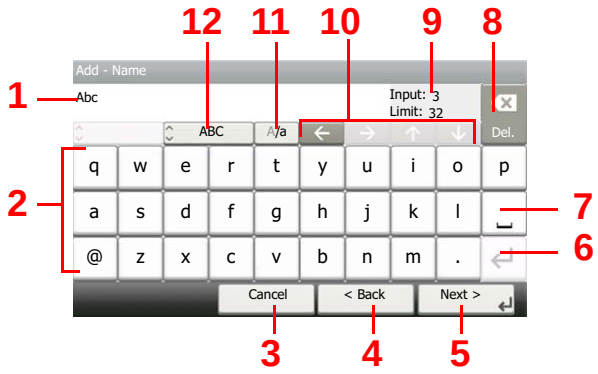

No.	Display/Key	Description
1	Display	Displays entered characters.
2	Keyboard	Select the character to enter.
3	[**Cancel**]	Select to cancel entered characters and return to the screen before the entry was made.
4	[**< Back**]	Select to return to the previous screen.
5	[**OK**] / [**Next >**]	Select to save the entered characters and move to the next screen.
6	Enter Key	Select to enter a line break.
7	Space Key	Select to insert a space.
8	Delete Key	Select to delete a character to the left of the cursor.
9	[**Input**] / [**Limit**] Display	Displays maximum number of characters and the number of characters entered.
10	Cursor Key	Select to move the cursor on the display.
11	[**A/a**] / [**A/a**]	Select to switch between upper case and lower case.
12	[**ABC**] / [**Symbol**]	Select the characters that are entered. To enter symbols or numbers, select [**Symbol**].

Upper-case Letter Entry Screen

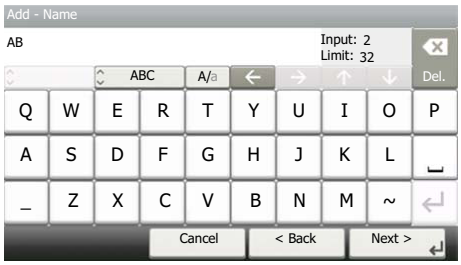

Number/Symbol Entry Screen

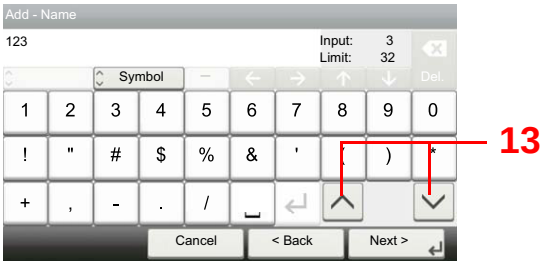

No.	Display/Key	Description
13	[∧]/[∨]	To enter a number or symbol not shown in the keyboard, select the cursor key and scroll the screen to view other numbers or symbols to enter.

Entering Characters

Follow the steps below to enter 'List A-1' for an example.

1 Enter 'List', (space).

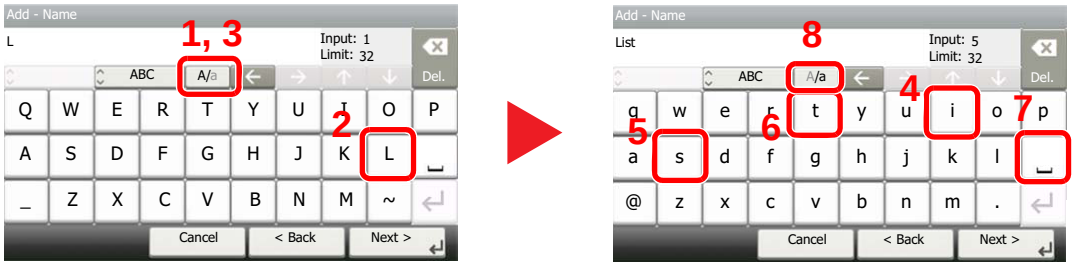

To shift from lower case to upper case letters, select [**A**/a]. To shift from upper case to lower case letters, select [A/**a**].

2 Enter 'A-1'.

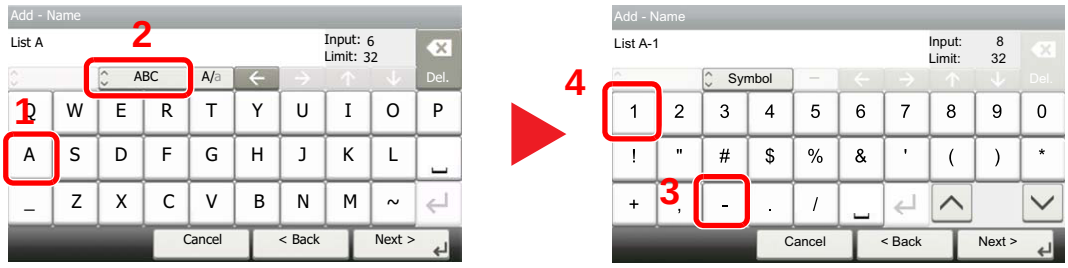

To enter numbers or symbols, select [**ABC**] to display [**Symbol**].

3 Register the characters you entered.

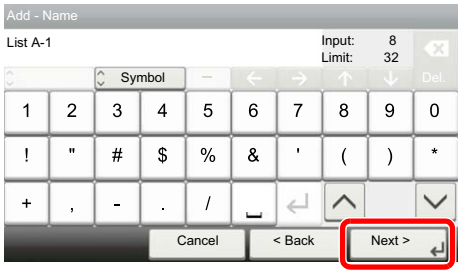

Select [**Next>**]. The entered characters are registered.

Paper

This section explains the paper sizes and types that can be used in the paper source.

For details on the sizes, types, and number of sheets of paper that can be loaded in each paper tray, refer to the following:

Specifications (page 11-19)

Basic Paper Specifications

This machine is designed to print on standard copy paper as used in regular ('dry') copiers and page printers such as laser printers. It also supports a variety of other types of paper that conform to the specifications given in this appendix.

Be careful when choosing paper. Paper unsuitable for the machine may cause jams or may be wrinkled.

Supported Paper

Use standard copy paper for regular copiers or laser printers. The printing quality will be affected by the quality of paper. Poor quality paper may result in unsatisfactory output.

Basic Paper Specifications

The following table lists the specifications of paper that is supported with this machine. Refer to the subsequent sections for further details.

Criteria	Specifications
Weight	Cassettes: 60 to 220 g/m^2
	Multi purpose tray: 60 to 220 g/m^2, 230 g/m^2 (Cardstock)
Dimensional accuracy	±0.7 mm
Squareness of corners	90° ±0.2°
Moisture content	4 to 6%
Pulp content	80% or more

NOTE

Some recycled paper does not meet requirements for use with this machine as listed in the Basic Paper Specifications shown below, such as moisture or pulp content. For this reason, we recommend purchasing a small amount of recycled paper as a sample for testing prior to use. Choose recycled paper that gives the best printing results and contains low levels of paper dust.

We are not responsible for the problems occurred from the use of paper that does not conform to our specifications.

Choosing the Appropriate Paper

This section describes guidelines for choosing paper.

Condition

Avoid using paper with bent corners or that is curled, dirty, or torn. Do not use paper that has a rough surface or paper fiber lint, or that is especially delicate. Use of paper in any of these conditions will not only deliver poor copies but may also cause jams and shorten the useful life of the machine. Choose paper with a smooth and even surface; however, avoid coated paper or paper with a treated surface as it may damage the drum or fusing unit.

Ingredients

Do not use paper such as paper that has been coated or surface-treated or paper that contains plastic or carbon. Those types of paper may produce harmful fumes from the heat of printing and may damage the drum.

Be sure to use the standard paper that contains at least 80% pulp, i.e., not more than 20% of the total paper content consists of cotton or other fibers.

Supported Paper Sizes

Paper of the following sizes is supported by the machine.

Measurements in the table take into account a ±0.7 mm dimensional accuracy for length and width. Corner angles must be 90° ± 0.2°.

Multi Purpose Tray

- Hagaki (Cardstock) (100 × 148 mm)
- Oufuku hagaki (Return postcard) (148 × 200 mm)
- Custom (70 × 148 to 216 × 356 mm)

Cassettes or Multi Purpose Tray

- Envelope Monarch (3-7/8 × 7-1/2")
- Envelope #10 (4-1/8 × 9-1/2")
- Envelope DL (110 × 220 mm)
- Envelope C5 (162 × 229 mm)
- Executive (7-1/4 × 10-1/2")
- Letter
- Legal
- A4 (297 × 210 mm)
- B5 (257 × 182 mm)
- A5 (210 × 148 mm)
- A6 (148 × 105 mm)
- B6 (182 × 128 mm)
- Envelope #9 (3-7/8 × 8-7/8")
- Envelope #6 (3-5/8 × 6-1/2")
- ISO B5 (176 × 250 mm)
- Oficio II
- 216 × 340 mm
- 16K (273 × 197 mm)

- Statement
- Folio (210 × 330 mm)
- Youkei 4 (105 × 235 mm)
- Youkei 2 (114 × 162 mm)
- Custom (Cassette: 92 × 148 to 216 × 356 mm, Multi Purpose Tray: 70 × 148 to 216 × 356 mm)

Smoothness

The paper surface should be smooth, but it must be uncoated. With paper that is too smooth and slippery, several sheets may accidentally be supplied at once, causing jams.

Basis Weight

In countries that use the metric system, basis weight is the weight in grams of one sheet of paper one square meter in area. In the United States, basis weight is the weight in pounds of one ream (500 sheets) of paper cut to the standard size (or trade size) for a specific grade of paper. Paper that is too heavy or too light may be supplied incorrectly or cause paper jams, which may cause excessive wear of the machine. Mixed paper weight (i.e., thickness) may cause several sheets to be supplied at once accidentally and may also cause blurring or other printing problems if the toner fails to adhere correctly.

Moisture Content

Paper moisture content is the ratio of moisture to dryness expressed as a percentage. Moisture affects how the paper is supplied, the electrostatic chargeability of the paper, and how the toner adheres.

Paper moisture content varies depending on the relative humidity in the room. High relative humidity causes paper to become damp, making the edges expand so it appears wavy. Low relative humidity causes paper to lose moisture, making the edges tighten and weakening print contrast.

Wavy or tight edges may cause the paper to slip when it is supplied. Try to keep the moisture content between 4 to 6%.

To maintain the right level of moisture content, bear in mind the following considerations.

- Store paper in a cool, well-ventilated place.
- Store paper flat and unopened in the package. Once the package is opened, reseal it if the paper is not to be used for a while.
- Store paper sealed in the original package and box. Put a pallet under the carton to keep it raised above the floor. Especially during rainy seasons keep the paper a sufficient distance away from wooden or concrete floors.
- Before using paper that has been stored, keep it at the proper moisture level for at least 48 hours.
- Do not store paper where it is exposed to heat, sunlight, or dampness.

Other Paper Specifications

Porosity: The density of the paper fibers.

Stiffness: Paper must be stiff enough or it may buckle in the machine, causing jams.

Curl: Most paper naturally tends to curl after the package is opened. When paper passes through the fixing unit, it curls upward slightly. To deliver flat printouts, load the paper so that the curl faces towards the bottom of the paper tray.

Static electricity: During printing, paper is electrostatically charged so that the toner adheres. Choose paper that can be discharged quickly so that copies do not cling together.

Whiteness: Paper whiteness affects print contrast. Use whiter paper for sharper, brighter copies.

Quality: Machine problems may occur if sheet sizes are not uniform or if corners are not square, edges are rough, sheets are uncut, or edges or corners are crushed. In order to prevent these problems, be especially careful when you cut the paper yourself.

Packaging: Choose paper that is properly packaged and stacked in boxes. Ideally, the packaging itself should have been treated with a coating to inhibit moisture.

Specially treated paper: We do not recommend printing onto the following types of paper, even if it conforms to the basic specifications. When you use these kinds of paper, purchase a small amount first as a sample to test.

- Glossy paper
- Watermarked paper
- Paper with an uneven surface
- Perforated paper

Special Paper

This section describes printing onto special paper and print media.

The following paper and media can be used.

- Transparencies
- Preprinted paper
- Bond paper
- Recycled paper
- Thin paper
- Letterhead
- Colored paper
- Prepunched paper
- Envelopes
- Hagaki (Cardstock)
- Thick paper
- Labels
- Coated
- High-quality paper

When using these paper and media, choose those that are designed specifically for copiers or page printers (such as laser printers). Use the multi purpose tray for transparencies, envelopes, cardstocks, and label paper.

Choosing Special Paper

Although special paper that meets the following requirements can be used with the machine, print quality will vary considerably due to differences in the construction and quality of special paper. Thus, special paper is more likely than regular paper to cause printing problems. Before purchasing special paper in volume, try testing a sample to ensure the print quality is satisfactory. General precautions when printing onto special paper are given below. Note that we are not responsible for any harm to the user or damage to the machine caused by moisture or specifications of special paper.

Select a cassette or multi purpose tray for special paper.

Transparencies

Transparencies must be able to withstand the heat of printing. Transparencies must meet the following conditions.

Heat resistance	Must withstand at least 190°C
Thickness	0.100 to 0.110 mm
Material	Polyester
Dimensional accuracy	±0.7 mm
Squareness of corners	90° ±0.2°

To avoid problems, use the multi purpose tray for transparencies and load transparencies with the long side facing the machine.

If transparencies jam frequently at output, try pulling the leading edge of sheets gently as they are ejected.

Label

Be sure to feed labels from the multi purpose tray.

For selecting labels, use extreme care so that the adhesive may not come in direct contact with any part of the machine and that the labels are not easily peeled from the carrier sheet. Adhesives that stick to the drum or rollers and peeled labels remaining in the machine may cause a failure.

When printing onto labels, you must be liable for the print quality and possible trouble.



Labels consist of three layers as shown in the illustration. The adhesive layer contains materials that are easily affected by the force applied in the machine. The carrier sheet bears the top sheet until the label is used. This composition of labels may cause more problems.

The label surface must be covered completely with the top sheet. Gaps between labels may cause peeling of labels, resulting in a serious failure.

Some label paper has large margins on the top sheet. When using such paper, do not peel these margins from the carrier sheet before completing output.

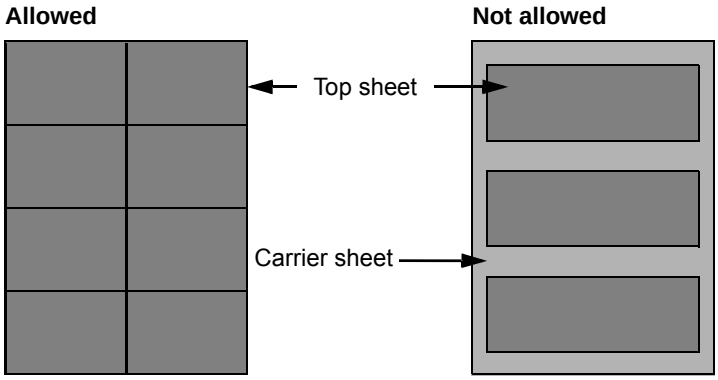

Use label paper that conforms to the following specifications.

Top sheet weight	44 to 74 g/m²
Basis weight (overall paper weight)	104 to 151 g/m²
Top sheet thickness	0.086 to 0.107 mm
Overall paper thickness	0.115 to 0.145 mm
Moisture content	4 to 6 % (composite)

Hagaki (Cardstock)

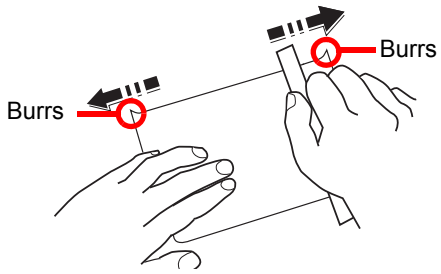

Before loading Hagaki (Cardstock) into the multi purpose tray, fan them and align the edges. If the Hagaki (Cardstock) paper is curled, straighten it before loading. Printing onto curled Hagaki (Cardstock) may cause jams.

Use unfolded Oufuku hagaki (Return postcard) (available at post offices). Some Hagaki (Cardstock) may still have rough edges developed by a paper cutter on the back side. Remove any such rough edges by placing the Hagaki (Cardstock) on a flat surface and rubbing the edges gently a few times with a ruler.

Envelopes

Envelopes should be fed from the MP tray with the print-side down or the cassette and the optional paper feeder with the print-side up.

NOTE
Do not load paper above the load limits located on the paper width guide of the cassette and the optional paper feeder.

Due to the structure of envelopes, printing evenly over the entire surface may not be possible in some cases. Thin envelopes in particular may be wrinkled by the machine in some cases as they pass through. Before purchasing envelopes in volume, try testing a sample to ensure the print quality.

Storing envelopes for a long period may cause them to become wrinkled. Thus, keep the package sealed until you are ready to use them.

Keep the following points in mind.

- Do not use envelopes with exposed adhesive. In addition, do not use the type of envelope in which the adhesive is exposed after the top layer is peeled off. Serious damage may be caused if the paper covering the adhesive comes off in the machine.
- Do not use envelopes with certain special features. For example, do not use envelopes with a grommet for winding a string to close the flap or envelopes with an open or film-covered window.
- If paper jams occur, load fewer envelopes at once.

Thick Paper

Before loading thick paper, fan it and align the edges. Some thick paper may still have rough edges developed by a paper cutter on the back side. Remove any such rough edges just as with Hagaki (Cardstock) by placing the paper on a flat surface and rubbing the edges gently a few times with a ruler. Printing onto paper with rough edges may cause jams.

NOTE
If the paper is not supplied correctly even after it is smoothed, load the paper with the leading edge raised a few millimeters.

Colored Paper

Colored paper must conform to the specifications.

Basic Paper Specifications (page 11-11)

In addition, the pigments in the paper must be able to withstand the heat of printing (up to 200°C or 392°F).

Preprinted Paper

Preprinted paper must conform to the specifications.

Basic Paper Specifications (page 11-11)

The colored ink must be able to withstand the heat of printing. It must be resistant to silicone oil as well. Do not use paper with a treated surface such as glossy paper used for calendars.

Recycled Paper

Recycled paper must conform to the specifications; however, its whiteness may be considered separately.

Basic Paper Specifications (page 11-11)

NOTE
Before purchasing recycled paper in volume, try testing a sample to ensure satisfactory print quality.

Coated Paper

Coated paper is created by treating the surface of the base paper with a coating that provides higher printing quality than plain paper. Coated paper is used for particularly high quality printing.

The surface of high-quality or medium-quality paper is coated with special agents that improve ink adhesion by making the paper surface smoother. These agents are used either to coat both sides of the paper or just one side. The coated side appears slightly glossy.

IMPORTANT
When printing on coated paper in very humid environments, ensure that the paper is kept dry as moisture may cause sheets to stick together when they are fed into the machine. If printing in very humid environments, set coated paper for one sheet each.

Specifications

IMPORTANT

Specifications are subject to change without notice.

NOTE

For more information on using the FAX, refer to the following:

FAX System 11 Operation Guide

Machine

Item		Description
Type		Desktop
Printing Method		Electrophotography by semiconductor laser
Paper Weight	**Cassette**	60 to 220 g/m^2
	Multi Purpose Tray	60 to 220 g/m^2, 230 g/m^2 (Cardstock)
Paper Type	**Cassette**	Plain, Rough, Recycled, Vellum, Preprinted, Bond, Color, Prepunched, Letterhead, Thick, High Quality, Envelope, Custom 1 to 8 (Duplex: Same as Simplex)
	Multi Purpose Tray	Plain, Transparency (OHP film), Rough, Vellum, Labels, Recycled, Preprinted, Bond, Cardstock, Coated, Color, Prepunched, Letterhead, Envelope, Thick, High Quality, Custom 1 to 8
Paper Size	**Cassette**	A4, A5, A6, B5, B6, Letter, Legal, Statement, Executive,Oficio II, Folio, 216 × 340 mm, 16K, B5 (ISO), Envelope #10, Envelope #9, Envelope #6 3/4, Envelope Monarch, Envelope DL, Envelope C5, Youkei 4, Youkei 2, Custom (92 × 148 mm to 216 × 356 mm)
	Multi Purpose Tray	A4, A5, A6, B5, B6, Folio, 216 × 340 mm, Letter, Legal, Statement, Executive, Oficio II, 16K, B5 (ISO), Envelope #10, Envelope #9, Envelope #6 3/4, Envelope Monarch, Envelope DL, Envelope C5, Hagaki (Cardstock), Oufuku Hagaki (Return postcard), Youkei 4, Youkei 2, Custom (70 × 148 mm to 216 × 356 mm)
Printable area		Print margin for top, bottom and both sides is 4 mm.
Warm-up Time 23°C/73.4°F, 60 %	**Power on**	20 seconds or less
	Low Power	10 seconds or less
	Sleep	17.6 seconds or less
Paper Capacity	**Cassette**	500 sheets (80 g/m^2)*1
	Multi Purpose Tray	100 sheets (A4/Letter or smaller) (80 g/m^2) , 25 sheets (larger than A4/Letter) (80 g/m^2)

*1 Up to upper limit height line in the cassette.

Item		Description
Output Tray Capacity	**Inner tray**	500 sheets (80 g/m^2)
Image Write System		Semiconductor laser and electrophotography
Memory		1 GB
Interface	**Standard**	USB Interface Connector: 1 (Hi-Speed USB) Network interface: 1 (10 BASE-T/100 BASE-TX/1000 BASE-T) USB Port: 2 (Hi-Speed USB)
	Option	eKUIO: 2*2 Fax: 1
Operating Environment	**Temperature**	10 to 32.5°C/50 to 90.5°F
	Humidity	10 to 80 %
	Altitude	3,500 m/11,482 ft maximum
	Brightness	1,500 lux maximum
Dimension (W × D × H) **(Including the Document Processor)**		21.66" × 19.99" × 29" 550 × 507.5 × 736.6 mm
Weight **(without toner container)**		Approx. 105.9 lb/Approx. 48 kg
Space Required (W × D) **(Using multi purpose tray)**		31.82" × 19.97" 808 × 507 mm
Power Source		120 V Specification Model: 120 V ∿ 60 Hz 9.5 A 230 V Specification Model: 220 to 240 V ∿ 50/60 Hz 5.0 A
The power consumption of the product in networked standby (If all network ports are connected.)		2.5 W
Options		Optional Equipment (page 11-2)

*2 When a fax line is installed, only one optional interface can be installed.

Copy Functions

Item		Description		
Copy Speed			Black and White Copying	Full Color Copying
		A4	30 sheets/min	30 sheets/min
		Letter	32 sheets/min	32 sheets/min
		Legal	26 sheets/min	26 sheets/min
		B5	27 sheets/min	27 sheets/min
		A5	27 sheets/min	27 sheets/min
		A6	27 sheets/min	27 sheets/min
First Copy Time (A4, place on the platen, feed from Cassette)	**Black and White**	6.4 seconds or less		
	Color	7.8 seconds or less		
Zoom Level		Manual mode: 25 to 400%, 1% increments Auto mode: Preset Zoom		
Continuous Copying		1 to 999 sheets		
Resolution		600 × 600 dpi		
Supported Original Types		Sheet, Book, 3-dimensional objects (maximum original size: Legal/ Folio)		
Original Feed System		Fixed		

Printer Functions

Item		Description
Printing Speed		Same as Copying Speed.
First Print Time (A4, feed from Cassette)	**Black and White**	7.0 seconds or less
	Color	8.0 seconds or less
Resolution		600 × 600 dpi, 9600 dpi equivalent × 600 dpi
Operating System		Windows XP, Windows Server 2003, Windows Vista, Windows 7, Windows 8, Windows 8.1, Windows Server 2008/R2, Windows Server 2012/R2, Mac OS 10.5 or later
Interface		USB Interface Connector: 1 (Hi-Speed USB) Network interface: 1 (10 BASE-T/100 BASE-TX/1000 BASE-T) Optional Interface (Option): 1 (For IB-50/IB-51 mounting)
Page Description Language		PRESCRIBE
Emulations		PCL6 (PCL-XL, PCL5c), KPDL3 (PostScript3 compatible), PDF, XPS, OpenXPS

Scanner Functions

Item	Description
Resolution	600 dpi, 400 dpi, 300 dpi, 200×400 dpi, 200 dpi, 200×100 dpi
File Format	TIFF (MMR/JPEG compression), JPEG, PDF (MMR/JPEG compression), XPS, PDF/A, High compressive PDF, Encrypted PDF, OPEN XPS
Scanning Speed[*1]	1-sided B/W 40 Images/min Color 30 Images/min 2-sided B/W 17 Images/min Color 13 Images/min (A4 landscape, 300 dpi, Image quality: Text/Photo original)
Interface	Ethernet (10 BASE-T/100 BASE-TX/1000 BASE-T), USB
Transmission System	SMB, SMTP, FTP, FTP over SSL, USB, TWAIN[*2], WIA[*3], WSD

*1 When using the document processor (except TWAIN and WIA scanning)
*2 Available Operating System: Windows XP/Windows Vista/Windows Server 2003/Windows Server 2008/Windows Server 2008 R2/Windows 7/Windows 8/Windows 8.1/Windows Server 2012/Windows Server 2012 R2
*3 Available Operating System: Windows Vista/Windows Server 2008/Windows Server 2008 R2/Windows 7/Windows 8/Windows 8.1/Windows Server 2012/Windows Server 2012 R2

Document Processor

Item	Description
Supported Original Types	Sheet originals
Paper Size	Maximum: Legal/Folio Minimum: Statement/A6
Paper Weight	1-sided: 50 to 120 g/m² 2-sided: 50 to 120 g/m²
Loading Capacity	75 sheets (50 to 80 g/m²) maximum[*1]

*1 Up to upper limit height line in the document processor

Paper Feeder (500-sheet)

Item	Description
Paper Supply Method	Friction roller feeder (No. Sheets: 550, 64 g/m^2, 1 cassette/ No. Sheets: 500, 80 g/m^2, 1 cassette)
Paper Size	A4, A5, B5, A6, Letter, Legal, B6, Folio, 216 × 340 mm, Statement, Executive, Oficio II, 16K, B5 (ISO), Envelope #10, Envelope #9, Envelope #6 3/4, Envelope Monarch, Envelope DL, Envelope C5, youkei 4, youkei 2, Custom (105 × 148 to 216 × 356 mm)
Supported Paper	Paper weight: 60 to 220 g/m² Media types: Plain, Recycled, Special paper
Dimensions **(W) × (D) × (H)**	21.66" × 19.97" × 6.19" 550 × 507 × 157 mm
Weight	21.0 lbs or less/ 9.5 kg or less

Paper Feeder (500-sheet x 2)

Item	Description
Paper Supply Method	Friction roller feeder (No. Sheets: 550, 64 g/m^2, 2 cassettes/ No. Sheets: 500, 80 g/m^2, 2 cassettes)
Paper Size	A4, A5, B5, A6, Letter, Legal, B6, Folio, 216×340 mm, Statement, Executive, Oficio II, 16K, B5 (ISO), Envelope #10, Envelope #9, Envelope #6 3/4, Envelope Monarch, Envelope DL, Envelope C5, youkei 4, youkei 2, Custom (105 x 148 to 216 x 356 mm)
Supported Paper	Paper weight: 60 to 220 g/m^2 Media types: Plain, Recycled, Special paper
Dimensions **(W) × (D) × (H)**	21.66" × 19.97" × 13.51" 550 × 507 × 343 mm
Weight	Approx. 39.7 lbs. / Approx. 18 kg

Paper Feeder (2,000-sheet)

Item	Description
Paper Supply Method	Friction roller feeder (No. Sheets: 2,200, 64 g/m^2/No. Sheets: 2,000, 80 g/m^2)
Paper Size	A4, Letter
Supported Paper	Paper weight: 60 to 220 g/m^2 Media types: Plain, Recycled, Special paper
Dimensions **(W) × (D) × (H)**	21.66" × 19.97" × 13.51" 550 × 507 × 343 mm
Weight	Approx. 44.1 lbs. / Approx. 20 kg

Inner Finisher

Item		Description	
Number of Trays		1 tray	
Paper Size (80 g/m^2) Finisher tray (no stapling)	**Tray A (Non-stapling)**	Legal, Folio, 216 x 340 mm, Custom (70 x 298 to 210 x 1020 mm): 250 sheets equivalent or 42 mm height (Thick: 20 sheets (129 to 220 g/m^2)) A4, A5, B5, A6, Letter, B6, Statement, Executive, Oficio II, 16K, B5 (ISO), Hagaki (Cardstock), Oufukuhagaki (Return postcard), Envelope #10, Envelope #9, Envelope #6 3/4, Envelope Monarch, Envelope DL, Envelope C5, youkei 4, youkei 2, Custom (70 x 148 to 210 x 297 mm): 300 sheets equivalent or 42 mm height (Thick: 20 sheets (129 to 220 g/m^2))	
Stapling	**Number of Sheets**	Legal, Oficio II, 216 x 340 mm	30 sheets (60 to 90 g/m^2) 20 sheets (91 to 105 g/m^2) 2 cover sheet only (106 g/m^2 to 128 g/m^2)
		A4, B5, Letter, 16K	50 sheets (60 to 90 g/m^2) 40 sheets (91 to 105 g/m^2) 2 cover sheet only (106 g/m^2 to 128 g/m^2)
	Media types	Plain, Recycled, Prepunched, Preprinted, Bond, Letterhead, Color, Coated, Thick, High Quality, Custom	
Dimensions (W) × (D) × (H) (Using multi purpose tray)		25.08" × 15.60" × 6.23" 637 × 396 × 158 mm	
Weight		Approx. 26.5 lbs. or less / Approx. 12 kg or less	

Mailbox

Item	Description
Number of Trays	6 trays
Paper Size (80 g/m^2)	**Tray 1 (to 5)** 216 x 340mm, OficioII, Foolscap (8.5 x 13.5"), Legal, Folio: 50 sheets A4, B5, A5, Letter, Executive, 16K, Statement: 100 sheets **Tray A** 216 x 340 mm, OficioII, Foolscap (8.5 x 13.5"), Legal, Folio, Custom (70 x 298 to 210 x 1220 mm): 250 sheets A4, B5, A5, B6, A6, Letter, Executive, 16K, Statement, B5 (ISO), Hagaki (Cardstock), Oufukuhagaki (Return pstcard), Custom (70 x 148 to 210 x 297 mm): 500 sheets
Dimensions (W) × (D) × (H)	16.3" × 14.18" × 29.93" 414 × 360 × 760 mm
Weight	Approx. 17.7 lbs. / Approx. 8 kg

Job separator

Item	Description
Number of Trays	1 tray
Maximum Sheets	100 Sheets (80 g/m^2)
Paper Size	A4, A5, B5, A6, Letter, Legal, B6, Folio, 216 x 340 mm, Statement, Executive, Oficio II, 16K, B5 (ISO), Envelope #10, Envelope #9, Envelope #6 3/4, Envelope Monarch, Envelope DL, Envelope C5, youkei 4, youkei 2, Hagaki (Cardstock), Oufukuhagaki (Return pstcard), Custom (70 x 148 to 210 x 1220 mm)
Paper Type	Paper weight: 60 to 220 g/m^2 Media types: Plain, Recycled, Special paper
Dimensions (W) × (D) × (H)	14.18" × 12.56" × 6.07" 360 × 319 × 154 mm
Weight	Approx. 0.9 lbs. / Approx. 0.4 kg

NOTE

Consult your dealer or service representative for recommended paper types.

Glossary

Accessibility

The machine is designed featuring good accessibility even for the elderly and those who are physically challenged or visually impaired. Touch panel is adjustable in two angles.

Apple Talk

AppleTalk offers file sharing and printer sharing and it also enables you to utilize application software that is on another computer on the same AppleTalk network.

Auto Form Feed Timeout

During data transmission, the machine may sometimes have to wait until receiving the next data. This is the auto form feed timeout. When the preset timeout passes, the machine automatically prints output. However, no output is performed if the last page has no data to be printed.

Auto-IP

Auto-IP is a module that enables dynamic IPv4 addresses to be assigned to a device on startup. However, DHCP requires a DHCP server. Auto-IP is a server-less method of choosing an IP address. IP addresses between 169.254.0.0 to 169.254.255.255 are reserved for Auto-IP and assigned automatically.

Auto Paper Selection

A function to automatically select paper in the same size as originals when printing.

Auto Sleep

A mode designed for electrical power saving, activated when the machine is left unused or there is no data transfer for a specific period. In Sleep mode, power consumption is kept to a minimum.

Bonjour

Bonjour, also known as zero-configuration networking, is a service that automatically detects computers, devices and services on an IP network. Bonjour, because an industry-standard IP protocol is used, allows devices to automatically recognize each other without an IP address being specified or DNS server being set. Bonjour also sends and receives network packets by UDP port 5353. If a firewall is enabled, the user must check that UDP port 5353 is left open so that Bonjour will run correctly. Some firewalls are set up so as to reject only certain Bonjour packets. If Bonjour does not run stably, check the firewall settings and ensure that Bonjour is registered on the exceptions list and that Bonjour packets are accepted. If you install Bonjour on Windows XP Service Pack 2 or later, the Windows firewall will be set up correctly for Bonjour.

Custom Box

The Custom Box function stores print data for each individual user on the printer and allows the user to print single or multiple copies of the stored data later using the printer's operation panel.

Default Gateway

This indicates the device, such as a computer or router, that serves as the entrance/exit (gateway) for accessing computers outside the network that you are on. When no specific gateway is designated for a destination IP address, data is sent to the host designated as the Default Gateway.

DHCP (Dynamic Host Configuration Protocol)

Dynamic Host Configuration Protocol (DHCP) that automatically resolves IP addresses, subnet masks, and gateway addresses on a TCP/IP network. DHCP minimizes the load of network management employing a large number of client computers because it relieves individual clients including printers from the IP address being assigned.

DHCP (IPv6)

DHCP (IPv6) is the next-generation of the Internet's Dynamic Host Configuration Protocol and supports IPv6. It extends the BOOTP startup protocol that defines the protocols used for transferring configuration information to hosts on the network. DHCP (IPv6) permits the DHCP server to use its expanded functionality to send configuration parameters to an IPv6 node. Because the network addresses that can be used are allocated automatically, the IPv6 node management workload is reduced in systems where the administrator has to exercise close control over IP address allocation.

dpi (dots per inch)

A unit for resolution, representing the number of dots printed per inch (25.4 mm).

EcoPrint Mode

A printing mode that helps save toner. Copies made in this mode are thus lighter than normal.

Emulation

The function to interpret and execute other printers' page description languages. The machine emulates operation of PCL6, KPDL3 (PostScript 3 compatible).

Enhanced WSD

Kyocera's proprietary web services.

FTP (File Transfer Protocol)

A protocol to transfer files on the TCP/IP network, whether the Internet or an intranet. Along with HTTP and SMTP/POP, FTP is now frequently used on the Internet.

Grayscale

A computer color expression. Displayed images of this sort are typically composed of shades of gray, varying from black at the weakest intensity to white at the strongest, without any other colors. Gray levels are displayed in numerical levels: that is, white and black only for 1 bit; 256 gray levels (including white and black) for 8 bits; and 65,536 gray levels for 16 bits.

Help

A ? (Help) key is provided on this machine's operation panel. If you are unsure of how to operate the machine, would like more information on its functions or are having problems getting the machine to work properly, press the ? (Help) key to view a detailed explanation on the touch panel.

IP Address

An Internet protocol address is a unique number that represents a specific computer or related device on the network. The format of an IP address is four sets of numbers separated by dots, e.g. 192.168.110.171. Each number should be between 0 and 255.

IPP

IPP (Internet Printing Protocol) is a standard that uses TCP/IP networks such as the Internet to enable print jobs to be sent between remote computers and printers. IPP is an extension of the HTTP protocol used to view websites and enables printing to be carried out via routers on printers in remote locations. It also supports the HTTP authentication mechanisms along with SSL server and client authentication as well as encryption.

Job Box

The Job Box function stores print data on the printer and allows users to print single or multiple copies of the stored data later using the printer's operation panel.

KPDL (Kyocera Page Description Language)

Kyocera's PostScript page description language compatible with Adobe PostScript Level 3.

Multi Purpose (MP) Tray

The paper supply tray on the front side of the machine. Use this tray instead of the cassettes when printing onto envelopes, Hagaki (Cardstock), transparencies, or labels.

NetBEUI (NetBIOS Extended User Interface)

An interface, developed by IBM in 1985, as an update from NetBIOS. It enables more advanced functions on smaller networks than other protocols such as TCP/IP, etc. It is not suitable for larger networks due to lack of routing capabilities to choose the most appropriate routes. NetBEUI has been adopted by IBM for its OS/2 and Microsoft for its Windows as a standard protocol for file sharing and printing services.

Outline font

With outline fonts, character outlines are represented with numerical expressions and fonts can be enlarged or reduced in different ways by changing the numeric values of those expressions. Printing remains clear even if you enlarge fonts, since the characters are defined with outlines represented with numerical expressions. You can specify the font size in steps of 0.25 points up to 999.75 points.

PDF/A

This is "ISO 19005-1. Document management - Electronic document file format for long-term preservation - Part 1: Use of PDF (PDF/A)", and is a file format based on PDF 1.4. It has been standardized as ISO 19005-1, and is a specialization of PDF, which has been mainly used for printing, for long-term storage. A new part, ISO 19005-2 (PDF/A-2), is currently being prepared.

POP3 (Post Office Protocol 3)

A standard protocol to receive E-mail from the server in which the mail is stored on the Internet or an intranet.

PostScript

A page description language developed by Adobe Systems. It enables flexible font functions and highly-functional graphics, allowing higher quality printing. The first version called Level 1 was launched in 1985, followed by Level 2 that enabled color printing and two-byte languages (e.g. Japanese) in 1990. In 1996, Level 3 was released as an update for the Internet access and PDF format as well as gradual improvements in implementation technologies.

PPM (prints per minute)

This indicates the number of A4 size printouts made in one minute.

Printer Driver

The software to enable you to print data created on any application software. The printer driver for the machine is contained in the DVD enclosed in the package. Install the printer driver on the computer connected to the machine.

RA(Stateless)

The IPv6 router communicates (transmits) information such as the global address prefix using ICMPv6. This information is the Router Advertisement (RA).

ICMPv6 stands for Internet Control Message Protocol, and is a IPv6 standard defined in the RFC 2463 "Internet Control Message Protocol (ICMPv6) for the Internet Protocol Version 6 (IPv6) Specification".

RAM Disk

Using part of the printer's memory as a virtual disk, you can set any amount of memory from overall printer memory as a RAM disk in order to use features such as electronic sorting (shortening print time).

Send as E-mail

A function to send the image data stored in the machine as an E-mail attachment. E-mail addresses can be selected from the list or entered at each time.

SMTP (Simple Mail Transfer Protocol)

A protocol for E-mail transmission over the Internet or an intranet. It is used for transferring mail between mail servers as well as for sending mail from clients to their servers.

Status Page

The page lists machine conditions, such as the memory capacity, total number of prints and scans, and paper source settings.

Subnet Mask

The subnet mask is a way of augmenting the network address section of an IP address.

A subnet mask represents all network address sections as 1 and all host address sections as 0. The number of bits in the prefix indicates the length of the network address. The term "prefix" refers to something added to the beginning and, in this context, indicates the first section of the IP address. When an IP address is written, the length of the network address is indicated by the prefix length after a forward slash (/). For example, "24" in the address "133.210.2.0/24". In this way, "133.210.2.0/24" denotes the IP address "133.210.2.0" with a 24-bit prefix (network section). This new network address section (originally part of the host address) made possible by the subnet mask is referred to as the subnet address. When you enter the subnet mask, be sure to set the "DHCP" setting to "Off".

TCP/IP (Transmission Control Protocol/Internet Protocol)

TCP/IP is a suite of protocols designed to define the way computers and other devices communicate with each other over a network.

TCP/IP (IPv6)

TCP/IP (IPv6) is based on the current Internet protocol, TCP/IP (IPv4). IPv6 is the next-generation Internet protocol and expands the available address space, which resolves the problem of the lack of addresses under IPv4, while also introducing other improvements such as additional security functionality and the capacity to prioritize data transmission.

TWAIN (Technology Without An Interesting Name)

A technical specification for connecting scanners, digital cameras, and other image equipment to computers. The TWAIN compatible devices enable you to process image data on any relevant application software. TWAIN is adopted on a large amount of graphic software (e.g. Adobe Photoshop) and OCR software.

USB (Universal Serial Bus) 2.0

A USB interface standard for Hi-Speed USB 2.0. The maximum transfer rate is 480 Mbps. This machine is equipped with USB 2.0 for high-speed data transfer.

WIA (Windows Imaging Acquisition)

A function to import images supported after Windows Me/XP from digital cameras and other peripheral devices. This function replaces what TWAIN used to do. The feature is provided as a part of Windows functions and improves ease of operation, so that you import images directly to My Computer without using any application.

Index

A

Accessibility 11-26
Address Book 3-22
  Adding 3-22
  Contact 3-22
  Editing and Deleting 3-26
  Group 3-25
Address Book/One Touch 8-25
Adjustment/Maintenance 8-42
AirPrint 4-9
Apache License (Version 2.0) 1-10
Apple Talk 11-26
Application 5-13, 8-24
Auto Color Correction 8-42
Auto Error Clear 8-41
Auto Form Feed Timeout 11-26
Auto Panel Reset 8-40
Auto Paper Selection 11-26
Auto Sleep 2-27, 11-26
Auto-IP 11-26
  Settings 8-29
Automatic 2-Sided Print Function 1-13

B

Background Density Adjustment 6-22, 8-42
  Default 8-16
Bonjour 11-26
  Settings 8-30

C

Cables 2-6
Calibration 8-43, 10-37
Card Authentication Kit 11-5
Cassette
  Loading Paper 3-4
  Paper Size and Media Type 8-8
Cassette 1 2-2
Cassette 3 2-5
Cassette 4 2-5
Cassette/MP Tray Settings 8-8
Character Entry Method 11-8
Checking the Counter 2-43
Checking the Remaining Amount of Toner 7-12
Cleaning 10-2
  Document Processor 10-2
  Glass Platen 10-2
  Slit Glass 10-3
Coated Paper 11-18
Collate 6-12
Collate/Offset
  Default 8-16
Color
  Calibration 10-37
  Color Balance 6-19
  Saturation 6-22
Color Balance 6-19
Color Registration 8-42
Color Selection 6-18
  Default 8-16
Combine 6-25
Command Center RX 2-46
Common Settings 8-10
  Color Toner Empty Action 8-19
  Default Screen 8-10
  Display Status/Log 8-21
  Error Handling 8-19
  Format SD Card 8-21
  Format SSD 8-21
  Function Defaults 8-16
  Function Key Usage 8-22
  Keyboard Layout 8-20
  Low Toner Alert Level 8-20
  Measurement 8-20
  Original Settings 8-11
  Paper Output 8-18
  Paper Settings 8-13
  Preset Limit 8-18
  Sound 8-10
  USB Keyboard Type 8-20
Connecting
  LAN Cable 2-7
  Power Cable 2-8
  USB cable 2-8
Connection Method 2-6
Continuous Scan 6-28
  Default 8-17
Contrast 6-21, 8-42
Conventions Used in This Guide xix
Copy 5-18
Copy Settings 8-22
  Auto % Priority 8-22
  Auto Paper Selection 8-22
  DP Read Action 8-22
  Reserve Next Priority 8-22
Copy Speed 11-21
Correcting Black Line 8-42
Counting the Number of Pages Printed
  Counter 2-43
  Each Job Account 9-43
  Print Accounting Report 9-44
  Total Accounting 9-43
  Unknown ID Job 9-46
Custom Box 11-26
  Creating a New Box 5-43
  Deleting Documents 5-47
  Editing and Deleting Custom Box 5-44
  Editing Documents 5-46
  Printing Documents 5-46
  Storing Documents 5-45

D

Data Sanitization 8-39
Data Security 8-39
Data Security Kit 11-5
Date Format 8-40
Date/Time 8-40

Date/Timer/Energy Saver 8-40
Auto Error Clear 8-41
Auto Panel Reset 8-40
Date Format 8-40
Date/Time 8-40
Error Clear Timer 8-41
Panel Reset Timer 8-40
Ping Timeout 8-41
Sleep Level 8-41
Sleep Rules 8-41
Sleep Timer 8-41
Time Zone 8-40
Unusable Time 8-41
Default Gateway 11-26
Settings 8-29
Default Screen 8-10
Delete after Printed 6-37
Density 6-16
Density Adjustment 8-42
Destination
Adding a Destination 3-22
Address Book 5-35
Checking and Editing 5-39
Confirmation Screen of Destinations 5-39
Dest. Check before Send 8-23
Entry Check for New Dest. 8-23
Multi Sending 5-32
One Touch Key 3-27
Search 5-36
Sort 8-25
Device 7-11
DHCP 11-27
Settings 8-29
DHCP (IPv6) 11-27
Settings 8-30
Display Brightness 8-42
Display Status/Log 8-21
Document Box
Basic Operation 5-42
Custom Box 5-41, 5-43
Job Box 4-10, 5-41
Removable Memory Box 5-41
Document Box Settings 8-24
Custom Box 8-24
Job Box 8-24
Polling Box 8-24
Sub Address Box 8-24
Document Processor 2-2
Loading Originals 5-3
Originals Not Supported by the Document Processor 5-3
Originals Supported by the Document Processor 5-3
Part Names 2-2
dpi 11-27
Drum Refresh 8-43
Duplex 6-27
Duplex (2-sided Original) 6-31

E

EcoPrint 6-17, 11-27
Default 8-16
Printer 8-26
Edit Destination
Address Book 3-22
Address Book Defaults 8-25
Contact 3-22
Group 3-25
One Touch Key 3-27
E-mail Settings 2-52
E-mail Subject/Body 6-36
Default 8-17
Emulation 11-27
Selection 8-26
Encrypted PDF Password 6-38
Energy Saving Control Function 1-13
Energy Star (ENERGY STAR®) Program 1-14
Enhanced WSD 8-32, 11-27
Enhanced WSD (SSL) 8-33
Enter key 2-19
Entry
File Name 6-29
Subject 6-36
Envelope Stack Guide 3-10
Environment 1-3
Error Clear Timer 8-41
Error Handling 8-19
Expansion Memory 11-5

F

Favorites 5-8
Editing and Deleting 5-12
Recalling 5-11
Registering 5-9
FAX 8-24
FAX Kit 11-4
File
Format 6-33
PDF 6-34
Separation 6-36
File Format 6-33
Default 8-16
File Management Utility Connection 5-31
File Name Entry 6-29
Default 8-17
File Separation 6-36
Default 8-16
Finisher Tray 2-5
First Copy Time 11-21
First Print Time 11-21
Front Cover 2-2
FTP 11-27
FTP Client (Transmission)
Protocol Detail 8-31
FTP Encrypted TX 6-37
Default 8-17
FTP Server (Reception)
Protocol Detail 8-31
Function Defaults 8-16
Function Key Usage 8-22

G

Glossary 11-26
Google Cloud Print 4-9
GPL/LGPL 1-8
Grayscale 11-27
Group Authorization Set. 9-17
  Group Authorization 9-17
  Group List 9-18
Group Authorization Settings 9-17
Guest Authorization Set. 9-20
  Guest Authorization 9-20
  Guest Property 9-21
Guides Provided with the Machine xvi

H

Handles 2-2
Help 11-27
Help Screen 2-20
High Compression PDF 6-33
  Default 8-17
Home 8-22
  Customize Desktop 2-13
  Customize Task Screen 2-13
  Wallpaper 2-13
Home Screen 2-12
Host Name 8-29
HTTP
  Protocol Detail 8-31
HTTPS
  Protocol Detail 8-31
Hue Adjustment 6-20

I

Image Quality 6-33
  Default 8-17
Inner Finisher 10-59
Inner Tray 2-2
Install
  Macintosh 2-38
  Software 2-30
  Windows 2-31
Interface Block Setting 8-37
Internet 8-25
  Proxy 8-25, 8-34
IP Address 11-27
  Settings 8-29
IPP 11-28
  Protocol Detail 8-31
IPP over SSL
  Protocol Detail 8-31
IPSec
  Settings 8-33

J

Job
  Available Status 7-2
  Canceling 7-10
  Checking History 7-8
  Checking Status 7-2
  Detailed Information 7-7
  Detailed Information of Histories 7-9
  Details of the Status Screens 7-3
  Displaying History Screen 7-9
  Displaying Status Screens 7-2
  Pause and Resumption 7-10
  Sending the Log History 7-9
Job Accounting 9-31
  Adding an Account 9-34
  Counting the Number of Pages Printed 9-43
  Default Setting 9-42
  Deleting an Account 9-37
  Editing an Account 9-36
  Enabling Job Accounting 9-32
  FAX Driver 9-41
  Job Accounting Access 9-33
  Login 9-45
  Logout 9-45
  Overview of Job Accounting 9-31
  Print Accounting Report 9-44
  Printing 9-38
  Restricting the Use of the Machine 9-35
  TWAIN 9-39
  WIA 9-40
Job Box 11-28
  Deletion of Job Retention 8-24
  Private Print Box 4-11
  Proof and Hold Box 4-14
  Quick Copy Box 4-13
  Quick Copy Job Retention 8-24
  Specifying the Job Box from a Computer and Storing the Job 4-10
  Storage Media 8-24
  Stored Job Box 4-12
Job Finish Notice 6-29
Job Separator 11-4
Job Separator Tray 2-5
JPEG/TIFF Print 6-39
  Default 8-17

K

Keyboard Layout 8-20
Knopflerfish License 1-10
KPDL 11-28

L

Label 11-16
LAN Cable 2-6
  Connecting 2-7
LAN Interface 8-33
Language 8-5
Large Capacity Feeder (2,000-sheet) 11-4
Laser Scanner Cleaning 8-43, 10-37
LDAP
  Protocol Detail 8-31
Legal Information 1-7
Legal Restriction on Copying 1-6
Legal Restriction on Scanning 1-6
Loading Originals 5-2
  Loading Originals in the Document Processor 5-3

Placing Originals on the Platen 5-2
Local Authorization 9-16
Login 2-21
Logout 2-22
Low Toner Alert Level 8-20
LPD
Protocol Detail 8-31

M

Mailbox 2-5, 11-4
Management 9-1
Manual Setting (IPv6) 8-30
Measurement 8-20
Media Type Setting 8-15
Mixed Size Originals 6-12
Mixed Size Stapling 6-14
Monotype Imaging License Agreement 1-9
Mopria 4-9
Multi Purpose Tray 2-2, 2-3, 11-28
Paper Size and Media Type 8-9
Multi Sending 5-32

N

NetBEUI 11-28
Protocol Detail 8-31
Network
Preparation 2-24
Settings 8-29
Network Interface 2-6
Network Interface (Send) 8-36
Network Interface Connector 2-4
Network Interface Kit 11-5
Notice 1-2

O

One Touch Key
Adding 3-27
Editing and Deleting 3-28
OpenSSL License 1-8
Operation Panel 2-2
Option
Card Authentication Kit 11-5
Data Security Kit 11-5
Expansion Memory 11-5
Job Separator 11-4
Large Capacity Feeder (2,000-sheet) 11-4
Mailbox 11-4
Network Interface Kit 11-5
Overview 11-2
Paper Feeder (500-sheet x2) 11-4
Paper Feeder (500-sheet) 11-4
SD/SDHC Memory Card 11-5
SSD 11-5
ThinPrint Option 11-5
USB Keyboard 11-5
Wireless Network Interface Kit 11-5
Option Interface Slot 2-4
Optional Applications 11-6
Optional Function 8-39
Optional Memory 8-38
Optional Network
Basic 8-35
Original
Auto Detect Original Size (DP) 8-11
Custom Original Size 8-11
Default Original Size 8-12
Settings 8-11
Original Eject Table 2-2
Original Image 6-16
Default 8-16
Original Orientation 6-11
Default 8-16
Original Settings 8-11
Original Size 6-9
Original Size Indicator Plates 2-2
Original SSLeay License 1-8
Original Stopper 2-2
Original Table 2-2
Original Width Guides 2-2
Outline font 11-28

P

Panel Reset Timer 8-40
Paper
Checking the Remaining Amount of Paper 7-12
Appropriate Paper 11-12
Cassette 8-8
Custom Paper Size 8-13
Default Paper Source 8-14
Loading Cardstock 5-7
Loading Envelopes 5-7
Loading Paper 3-2
Loading Paper in the Cassettes 3-4
Loading Paper in the Multi Purpose Tray 3-9
Media for Auto 8-14
Media Type Setting 8-14
Multi Purpose Tray 8-9
Paper Settings 8-13
Precaution for Loading Paper 3-4
Size and Media Type 3-9, 8-8, 11-11
Special Paper 11-15
Special Paper Action 8-14
Specifications 11-11
Weight 8-15
Paper Feed Mode 8-27
Paper Feeder (500-sheet x2) 11-4
Paper Feeder (500-sheet) 11-4
Paper Jams 10-38
Bridge Unit 10-54
Cassette 1 10-40
Cassette 2 10-40
Cassette 3 (2000-sheet x 1) 10-43, 10-54
Cassette 3 (500-sheet x 2) 10-41
Cassette 4 (500-sheet x 2) 10-45
Document Processor 10-57
Inner Finisher 10-56
Jam Location Indicators 10-38
Mailbox 10-55
Multipurpose Tray 10-47

Paper Length Guide 2-3, 3-4
Paper Output 8-18
Paper Selection 6-10
Paper Settings 8-13
Paper Stopper 3-10
Paper Width Adjusting Tab 2-3
Paper Width Guide 2-3
Paper Width Guides 3-4
Part Names 2-2
PDF/A 6-33, 11-28
  Default 8-17
Ping 8-34
Platen 2-2
POP3 11-28
POP3 (E-mail RX)
  Protocol Detail 8-31
PostScript 11-28
Power Cable
  Connecting 2-8
Power Management 1-13
Power Off 2-9
Power On 2-9
Power Switch 2-2
PPM 11-28
Precaution for Loading Paper 3-4
Precautions for Use 1-4
Preset Limit 8-18
Prevent Bleed-thru 6-23
  Default 8-16
Print Settings 4-2, 4-8
Printer 8-26
  Auto Cassette Change 8-28
  Color Setting 8-26
  Copies 8-26
  CR Action 8-27
  Duplex 8-26
  EcoPrint 8-26
  Emulation 8-26
  Form Feed TimeOut 8-27
  Gloss Mode 8-28
  Job Name 8-27
  LF Action 8-27
  MP Tray Priority 8-27
  Orientation 8-26
  Override A4/Letter 8-26
  Paper Feed Mode 8-27
  Print setting 4-2
  User Name 8-27
  Wide A4 8-27
Printer Driver 11-29
  Help 4-3
Printing Documents Stored in Removable USB Memory 5-48
Printing from PC 4-4
Printing Speed 11-21
Priority Override 6-30
Product Library xvii

Q

Quick No. Search key 2-19
Quick Setup Wizard 2-28
Quiet Mode 6-30
Quiet Mode Settings 8-42

R

RA (Stateless) 11-29
  Settings 8-30
RAM Disk 11-29
RAM Disk Setting 8-38
Raw Port
  Protocol Detail 8-31
Recycled Paper 11-18
Regarding Trade Names 1-7
Regular Maintenance 10-2
  Toner Container Replacement 10-4
  Waste Toner Box Replacement 10-7
Report 8-5
  Admin Report Settings 8-6
  Report Print 8-5
  Result Report Settings 8-6
  Sending Log History 8-7
Report Print
  Accounting Report 8-6
  Font List 8-5
  Network Status 8-5
  Optional Network Status 8-6
  Service Status 8-6
  Status Page 8-5
Resolution 6-36, 11-21
Resource Saving - Paper 1-13
Responding to Messages 10-20
Restart 8-37
Restart Network 8-34
Right Cover 1 2-3
Right Cover 1 Lever 2-3

S

Safety Conventions in This Guide 1-2
Saturation 6-22
Saving Documents to USB Memory 5-50
Scan Resolution 6-36
  Default 8-16
SD Card
  Format 8-21
SD/SDHC Memory Card 11-5
Secure Protocol 8-33
Security Level 8-37
Send and Forward 8-23
Send as E-mail 5-20
Send Result Report 8-6
Send Settings 8-23
  Color TIFF Compression 8-23
  Default Screen 8-23
  Dest. Check before Send 8-23
  Entry Check for New Dest. 8-23
  New Destination Entry 8-23
  Recall Destination 8-23
  Send and Forward 8-23
Send to Folder (FTP) 5-20
Send to Folder (SMB) 5-20

Sending 5-20
Preparation for Sending a Document to a PC 3-12
Sending Size 6-32
Service Setting 8-43
Setting Date and Time 2-23
Sharpness 6-21
Shortcuts 5-16
Adding 5-16
Editing and Deleting Shortcuts 5-17
Simple Login 2-22
Simple Login Settings
Simple Login 9-25
Simple Login Setup 9-25
Skip Blank Page 6-30
Sleep 2-26
Sleep Level 2-27, 8-41
Sleep Rules 2-27, 8-41
Sleep Timer 8-41
Slit Glass 2-2
SMB Client (Transmission)
Protocol Detail 8-31
SMTP 11-29
SMTP (E-mail TX)
Protocol Detail 8-31
SNMP
Protocol Detail 8-31
SNMPv3
Protocol Detail 8-31
Solving Malfunctions 10-13
Sound 8-10
Specifications 11-19
Copy Functions 11-21
Document Processor 11-22
Innner Finisher 11-24
Machine 11-19
Mailbox 11-24, 11-25
Paper Feeder (2,000-sheet) 11-23
Paper Feeder (500-sheet x 2) 11-23
Paper Feeder (500-sheet) 11-23
Printer Functions 11-21
Scanner Functions 11-22
SSD 11-5
Format 8-21
SSD Initialization 8-39
SSL 8-33
Stack Level Adjuster 3-11
Staple Jam 10-59
Status Page 11-29
Status/Job Cancel 7-1
Storing Size 6-38
Subnet Mask 11-29
Settings 8-29
Supplies
Checking the Remaining Amount 7-12
Support Tray Section of the Multi Purpose Tray 2-3
Symbols 1-2
System Menu 8-2
Address Book/One Touch 8-25
Adjustment/Maintenance 8-42
Application 8-24
Cassette/MP Tray Settings 8-8
Common Settings 8-10
Copy 8-22
Date/Timer/Energy Saver 8-40
Document Box 8-24
FAX 8-24
Home 2-12
Internet 8-25
Language 8-5
Operation Method 8-2
Printer 8-26
Quick Setup Wizard 2-28
Report 8-5
Send 8-23
System/Network 8-29
User Login/Job Accounting 8-26
User Property 8-7, 9-10
System/Network 8-29
Data Security 8-39
Interface Block Setting 8-37
Network 8-29
Network Interface (Send) 8-36
Optional Function 8-39
Optional Memory 8-38
Optional Network 8-35
RAM Disk Setting 8-38
Restart 8-37
Security Level 8-37
Wireless Network 8-35

T

TCP/IP 11-29
Settings 8-29
TCP/IP (IPv4)
Settings 2-24, 8-29
TCP/IP (IPv6) 11-27
Settings 8-30
ThinPrint
Protocol Detail 8-32
ThinPrint Option 11-5
ThinPrint Over SSL
Protocol Detail 8-32
Time Zone 8-40
Tone Curve Adjustment 8-43
Toner Container (Black) 2-4
Toner Container (Cyan) 2-4
Toner Container (Magenta) 2-4
Toner Container (Yellow) 2-4
Toner Container Replacement 10-4
Touch Panel 2-12
Tray A 2-5
Troubleshooting 10-13
TWAIN 11-30
Setting TWAIN Driver 2-40

U

USB 11-30
USB Cable
Connecting 2-8
USB Interface 2-6

USB Interface Connector 2-4
USB Keyboard 11-5
USB Keyboard Type 8-20
USB Memory
Printing 5-48
Remove 5-51
Save 5-50
USB Memory Slot 2-2
User Login Administration 9-2
Adding a User 9-5
Changing User Properties 9-8
Enabling User Login Administration 9-3
FAX Driver 9-15
Group Authorization Settings 9-17
Guest Authorization Set. 9-20
ID Card Settings 9-28
Local Authentication 9-16
Login 2-21
Logout 2-22
Obtain NW User Property 9-23
Overview of User Login Administration 9-2
Printing 9-12
Simple Login Settings 9-25
TWAIN 9-13
User Account Lockout Setting 9-4
WIA 9-14
User Login/Job Accounting 8-26
Job Accounting 9-31
Unknown ID Job 9-46
User Login 9-2
User Property 8-7

W

Waste Toner Box 2-4
Waste Toner Box Replacement 10-7
WIA 11-30
Setting WIA Driver 2-42
Wireless Network 8-35
Basic 8-35
Setup 8-35
Wireless Network Interface Kit 11-5
WSD Print 8-32
WSD Scan 5-29, 8-32

X

XPS Fit to Page 6-39
Default 8-17

Z

Zoom 6-23
Default 8-17


QUALITY
CERTIFICATE
This machine has passed
all quality controls and
final inspection

PASSIONATE PEOPLE.
FROM ALL OVER THE WORLD.

KYOCERA Document Solutions Europe B.V.
Bloemlaan 4, 2132 NP Hoofddorp,
The Netherlands
Phone: +31-20-654-0000
Fax: +31-20-653-1256

KYOCERA Document Solutions Nederland B.V.
Beechavenue 25, 1119 RA Schiphol-Rijk,
The Netherlands
Phone: +31-20-5877200
Fax: +31-20-5877260

KYOCERA Document Solutions (U.K.) Limited
Eldon Court, 75-77 London Road,
Reading, Berkshire RG1 5BS,
United Kingdom
Phone: +44-118-931-1500
Fax: +44-118-931-1108

KYOCERA Document Solutions Italia S.p.A.
Via Monfalcone 15, 20132, Milano, Italy
Phone: +39-02-921791
Fax: +39-02-92179-600

KYOCERA Document Solutions Belgium N.V.
Sint-Martinusweg 199-201 1930 Zaventem,
Belgium
Phone: +32-2-7209270
Fax: +32-2-7208748

KYOCERA Document Solutions France S.A.S.
Espace Technologique de St Aubin
Route de l'Orme 91195 Gif-sur-Yvette CEDEX,
France
Phone: +33-1-69852600
Fax: +33-1-69853409

KYOCERA Document Solutions Espana, S.A.
Edificio Kyocera, Avda. de Manacor No.2,
28290 Las Matas (Madrid), Spain
Phone: +34-91-6318392
Fax: +34-91-6318219

KYOCERA Document Solutions Finland Oy
Atomitie 5C, 00370 Helsinki,
Finland
Phone: +358-9-47805200
Fax: +358-9-47805390

KYOCERA Document Solutions
Europe B.V., Amsterdam (NL) Zürich Branch
Hohlstrasse 614, 8048 Zürich,
Switzerland
Phone: +41-44-9084949
Fax: +41-44-9084950

KYOCERA Document Solutions
Deutschland GmbH
Otto-Hahn-Strasse 12, 40670 Meerbusch,
Germany
Phone: +49-2159-9180
Fax: +49-2159-918100

KYOCERA Document Solutions Austria GmbH
Altmannsdorferstraße 91, Stiege 1, 2. OG, Top 1, 1120, Wien,
Austria
Phone: +43-1-863380
Fax: +43-1-86338-400

KYOCERA Document Solutions Nordic AB
Esbogatan 16B 164 75 Kista,
Sweden
Phone: +46-8-546-550-00
Fax: +46-8-546-550-10

KYOCERA Document Solutions Norge Nuf
Olaf Helsetsv. 6, 0619 Oslo,
Norway
Phone: +47-22-62-73-00
Fax: +47-22-62-72-00

KYOCERA Document Solutions Danmark A/S
Ejby Industrivej 60, DK-2600 Glostrup,
Denmark
Phone: +45-70223880
Fax: +45-45765850

KYOCERA Document Solutions Portugal Lda.
Rua do Centro Cultural, 41 (Alvalade) 1700-106 Lisboa,
Portugal
Phone: +351-21-843-6780
Fax: +351-21-849-3312

KYOCERA Document Solutions
South Africa (Pty) Ltd.
KYOCERA House, Hertford Office Park,
90 Bekker Road (Cnr. Allandale), Midrand, South Africa
Phone: +27-11-540-2600
Fax: +27-11-466-3050

KYOCERA Document Solutions Russia LLC.
Building 2, 51/4, Schepkina St., 129110, Moscow,
Russia
Phone: +7(495)741-0004
Fax: +7(495)741-0018

KYOCERA Document Solutions Middle East
Dubai Internet City, Bldg. 17,
Office 157 P.O. Box 500817, Dubai,
United Arab Emirates
Phone: +971-04-433-0412

KYOCERA Document Solutions Inc.
2-28, 1-chome, Tamatsukuri, Chuo-ku
Osaka 540-8585, Japan
Phone: +81-6-6764-3555
http://www.kyoceradocumentsolutions.com

First edition 2015.09
2R4KDENEN000

KYOCERA Document Solutions Inc. – 2-28, 1-Chome – Tamatsukuri – Chuo-Ku
Osaka 540-8585 – Japan – www.kyoceradocumentsolutions.com

KYOCERA
Document Solutions