# User's Manual

80 PLUS GOLD

**EBT Series**



## High Efficiency Switching Power Supply

※ To ensure safe and easy installation, Please read the following precautions.

**www.ZALMAN.com**

Ver.150925

## 1. Warnings and Safety Precautions

**Warning**

Neglecting the following may cause serious injury or death.

- Opening the cover of the product while the power cord is plugged into an outlet may cause electrocution or critical damage to the product.
- Handling the power cord with wet hands may cause electrocution.
- Inserting fingers or metallic objects into the cooling fan may cause injury or electrocution.

**Caution**

Neglecting the following may cause minor injuries, degrade product conditions or cause malfunction.

- Operating the product in an extremely cold or hot environment can degrade product performance and lifespan.
- Exposure to liquids may cause malfunction.
- Operation in a humid or non-ventilated environment may reduce product lifespan.
- Plugging the main power connector P1 into the motherboard while the product is connected to the AC power source may cause damage to the motherboard.
- Make sure that the connectors are connected to their designated locations, and that the connectors are not oriented in the wrong direction when connecting the DC output connectors.
- Please use gloves to prevent injuries during installation.
- Product designs and specifications may be revised without prior notification to improve quality and performance.

Disclaimer) Zalman Tech Co., Ltd. is not responsible for any damages due to external causes, including but not limited to, improper use, problems with electrical power, accident, neglect, alteration, repair, improper installation, or improper testing.

## 2. Components



Power Supply



Four Screw



Five Cable Tie



AC Power Cord




User's Manual

# 3. Specifications

## 1) ZM650-EBT Electrical & Physical Specifications

| | | | | | | | | | | |
|---|---|---|---|---|---|---|---|---|---|---|
| AC Input Range | Voltage | 100~240VAC ±10% | | | Vout | Output Load Rating | | | Combined Power | |
| | Frequency | 50Hz ~ 60Hz ±3 | | | | $I_{min}$ | $I_{max}$ | $I_{peak}$ | | |
| AC Input Current | 100VAC | 10A | | | +3.3V | 0.0A | 22A | | 120W | 650W |
| | 240VAC | | | | +5V | 0.0A | 22A | | | |
| PFC Type | Active PFC | | | | +12V | 0.0A | 54.2A | | 650W | |
| Power Factor Correction | Max 99% | | | | -12V | 0.0A | 0.3A | | 3.6W | |
| Inrush Current Limit (@ Cold Start at 25℃) | 100VAC | Max 150A | | | +5VSB | 0.0A | 3A | | 15W | |
| | 240VAC | | | | Ambient Temperature | | | | | |
| Efficiency | Max 92% @ 230VAC, Typical load | | | | Operation | 0 ~ +40℃ | | | | |
| DC Output Voltage Regulation | Vout | Regulation Range | | At Full Load | Storage | -20 ~ +70℃ | | | | |
| | +3.3VDC | ±5% | +3.14 ~ +3.47V | | Ambient Humidity | | | | | |
| | +5VDC | ±5% | +4.75 ~ +5.25V | | Operation | 5% ~ 95% RH | | | | |
| | +12VDC | ±5% | +11.4 ~ +12.6V | | Storage | 5% ~ 95% RH | | | | |
| | -12VDC | ±10% | -10.8 ~ -13.0V | | Dimensions | 160(D) x 150(W) x 86(H)mm | | | | |
| | +5VSB | ±5% | +4.75 ~ +5.25V | | Weight | 2.4kg | | | | |
| DC Output Ripple & Noise | Vout | Standard Range | | At Full Load | Protection Funtions | | | | | |
| | +3.3VDC | 50mV | | | Over-Current Protection (OCP) | | | | | |
| | +5VDC | 50mV | | | Over-Voltage Protection (OVP) | | | | | |
| | +12VDC | 120mV | | | Under-Voltage Protection (UVP) | | | | | |
| | -12VDC | 120mV | | | Short-Cicuit Protection (SCP) | | | | | |
| | +5VSB | 50mV | | | Over-Power Protection (OPP) | | | | | |
| | | | | | Over-Temperature Protection (OTP) | | | | | |

## 2) ZM750-EBT Electrical & Physical Specifications

| | | | | | | | | | | |
|---|---|---|---|---|---|---|---|---|---|---|
| AC Input Range | Voltage | 100~240VAC ±10% | | | Vout | Output Load Rating | | | Combined Power | |
| | Frequency | 50Hz ~ 60Hz ±3 | | | | $I_{min}$ | $I_{max}$ | $I_{peak}$ | | |
| AC Input Current | 100VAC | 10A | | | +3.3V | 0.0A | 22A | | 120W | 750W |
| | 240VAC | | | | +5V | 0.0A | 22A | | | |
| PFC Type | Active PFC | | | | +12V | 0.0A | 62.5A | | 750W | |
| Power Factor Correction | Max 99% | | | | -12V | 0.0A | 0.3A | | 3.6W | |
| Inrush Current Limit (@ Cold Start at 25℃) | 100VAC | Max 150A | | | +5VSB | 0.0A | 3A | | 15W | |
| | 240VAC | | | | Ambient Temperature | | | | | |
| Efficiency | Max 92% @ 230VAC, Typical load | | | | Operation | 0 ~ +40℃ | | | | |
| DC Output Voltage Regulation | Vout | Regulation Range | | At Full Load | Storage | -20 ~ +70℃ | | | | |
| | +3.3VDC | ±5% | +3.14 ~ +3.47V | | Ambient Humidity | | | | | |
| | +5VDC | ±5% | +4.75 ~ +5.25V | | Operation | 5% ~ 95% RH | | | | |
| | +12VDC | ±5% | +11.4 ~ +12.6V | | Storage | 5% ~ 95% RH | | | | |
| | -12VDC | ±10% | -10.8 ~ -13.0V | | Dimensions | 160(D) x 150(W) x 86(H)mm | | | | |
| | +5VSB | ±5% | +4.75 ~ +5.25V | | Weight | 2.5kg | | | | |
| DC Output Ripple & Noise | Vout | Standard Range | | At Full Load | Protection Funtions | | | | | |
| | +3.3VDC | 50mV | | | Over-Current Protection (OCP) | | | | | |
| | +5VDC | 50mV | | | Over-Voltage Protection (OVP) | | | | | |
| | +12VDC | 120mV | | | Under-Voltage Protection (UVP) | | | | | |
| | -12VDC | 120mV | | | Short-Cicuit Protection (SCP) | | | | | |
| | +5VSB | 50mV | | | Over-Power Protection (OPP) | | | | | |
| | | | | | Over-Temperature Protection (OTP) | | | | | |

## 3) ZM650/750-EBT Cable Specifications

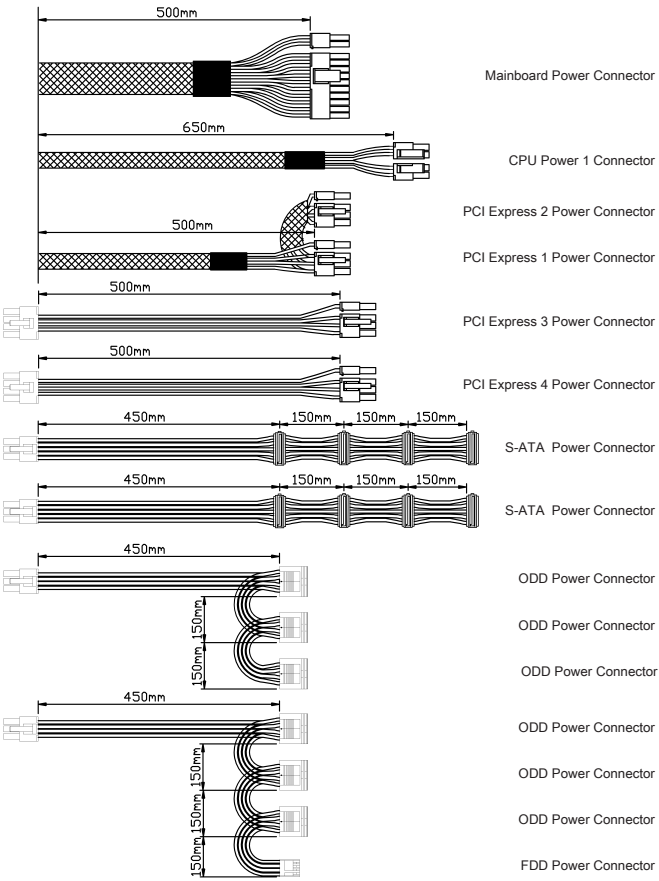

# 3. Specifications

## 1) ZM850-EBT Electrical & Physical Specifications

| AC Input Range | Voltage | 100~240VAC ±10% | | Vout | Output Load Rating | | | Combined Power | |
|---|---|---|---|---|---|---|---|---|---|
| | Frequency | 50Hz ~ 60Hz ±3 | | | $I_{min}$ | $I_{max}$ | $I_{peak}$ | | |
| AC Input Current | 100VAC | 15A | | +3.3V | 0.0A | 25A | | 130W | |
| | 240VAC | | | +5V | 0.0A | 25A | | | |
| PFC Type | Active PFC | | | +12V | 0.0A | 70.5A | | 846W | 850W |
| Power Factor Correction | Max 99% | | | -12V | 0.0A | 0.3A | | 3.6W | |
| Inrush Current Limit (@ Cold Start at 25℃) | 100VAC | Max 150A | | +5VSB | 0.0A | 4A | | 20W | |
| | 240VAC | | | Ambient Temperature | | | | | |
| Efficiency | Max 92% @ 230VAC, Typical load | | | Operation | 0 ~ +50℃ | | | | |
| DC Output Voltage Regulation | Vout | Regulation Range | | Storage | -20 ~ +70℃ | | | | |
| | +3.3VDC | ±5% | +3.14 ~ +3.47V | At Full Load | Ambient Humidity | | | | |
| | +5VDC | ±5% | +4.75 ~ +5.25V | | Operation | 5% ~ 95% RH | | | |
| | +12VDC | ±5% | +11.4 ~ +12.6V | | Storage | 5% ~ 95% RH | | | |
| | -12VDC | ±10% | -10.8 ~ -13.0V | | Dimensions | 180(D) x 150(W) x 86(H)mm | | | |
| | +5VSB | ±5% | +4.75 ~ +5.25V | | Weight | 3.2kg | | | |
| DC Output Ripple & Noise | Vout | Standard Range | | At Full Load | Protection Funtions | | | | |
| | +3.3VDC | 50mV | | | Over-Current Protection (OCP) | | | | |
| | +5VDC | 50mV | | | Over-Voltage Protection (OVP) | | | | |
| | +12VDC | 120mV | | | Under-Voltage Protection (UVP) | | | | |
| | -12VDC | 120mV | | | Short-Cicuit Protection (SCP) | | | | |
| | +5VSB | 50mV | | | Over-Power Protection (OPP) | | | | |
| | | | | | Over-Temperature Protection (OTP) | | | | |

## 3) ZM1000-EBT Electrical & Physical Specifications

| AC Input Range | Voltage | 100~240VAC ±10% | | Vout | Output Load Rating | | | Combined Power | |
|---|---|---|---|---|---|---|---|---|---|
| | Frequency | 50Hz ~ 60Hz ±3 | | | $I_{min}$ | $I_{max}$ | $I_{peak}$ | | |
| AC Input Current | 100VAC | 15A | | +3.3V | 0.0A | 25A | | 130W | |
| | 240VAC | | | +5V | 0.0A | 25A | | | |
| PFC Type | Active PFC | | | +12V | 0.0A | 83.4A | | 1000W | 1000W |
| Power Factor Correction | Max 99% | | | -12V | 0.0A | 0.3A | | 3.6W | |
| Inrush Current Limit (@ Cold Start at 25℃) | 100VAC | Max 150A | | +5VSB | 0.0A | 4A | | 15W | |
| | 240VAC | | | Ambient Temperature | | | | | |
| Efficiency | Max 92% @ 230VAC, Typical load | | | Operation | 0 ~ +50℃ | | | | |
| DC Output Voltage Regulation | Vout | Regulation Range | | Storage | -20 ~ +70℃ | | | | |
| | +3.3VDC | ±5% | +3.14 ~ +3.47V | At Full Load | Ambient Humidity | | | | |
| | +5VDC | ±5% | +4.75 ~ +5.25V | | Operation | 5% ~ 95% RH | | | |
| | +12VDC | ±5% | +11.4 ~ +12.6V | | Storage | 5% ~ 95% RH | | | |
| | -12VDC | ±10% | -10.8 ~ -13.0V | | Dimensions | 180(D) x 150(W) x 86(H)mm | | | |
| | +5VSB | ±5% | +4.75 ~ +5.25V | | Weight | 3.6kg | | | |
| DC Output Ripple & Noise | Vout | Standard Range | | At Full Load | Protection Funtions | | | | |
| | +3.3VDC | 50mV | | | Over-Current Protection (OCP) | | | | |
| | +5VDC | 50mV | | | Over-Voltage Protection (OVP) | | | | |
| | +12VDC | 120mV | | | Under-Voltage Protection (UVP) | | | | |
| | -12VDC | 120mV | | | Short-Cicuit Protection (SCP) | | | | |
| | +5VSB | 50mV | | | Over-Power Protection (OPP) | | | | |
| | | | | | Over-Temperature Protection (OTP) | | | | |

## 4) ZM850/1000-EBT Cable Specifications

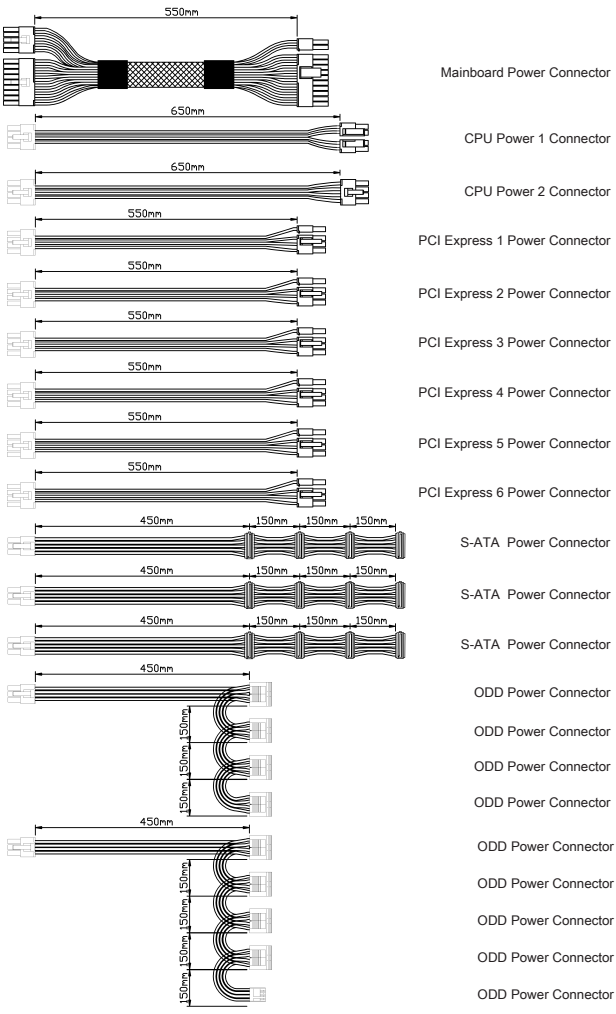

## 3. Specifications

### 1) ZM1200-EBT Electrical & Physical Specifications

| AC Input Range | Voltage | 100~240VAC ±10% | | Vout | Output Load Rating | | | Combined Power | |
|---|---|---|---|---|---|---|---|---|---|
| | Frequency | 50Hz ~ 60Hz ±3 | | | $I_{min}$ | $I_{max}$ | $I_{peak}$ | | |
| AC Input Current | 100VAC | 15A | | +3.3V | 0.0A | 25A | | 130W | 1200W |
| | 240VAC | | | +5V | 0.0A | 25A | | | |
| PFC Type | Active PFC | | | +12V | 0.0A | 100A | | 1200W | |
| Power Factor Correction | Max 99% | | | -12V | 0.0A | 0.3A | | 3.6W | |
| Inrush Current Limit (@ Cold Start at 25℃) | 100VAC | Max 150A | | +5VSB | 0.0A | 4A | | 20W | |
| | 240VAC | | | Ambient Temperature | | | | | |
| Efficiency | Max 92% @ 230VAC, Typical load | | | Operation | 0 ~ +50℃ | | | | |
| DC Output Voltage Regulation | Vout | Regulation Range | | At Full Load | Storage | -20 ~ +70℃ | | | |
| | +3.3VDC | ±5% | +3.14 ~ +3.47V | | Ambient Humidity | | | | |
| | +5VDC | ±5% | +4.75 ~ +5.25V | | Operation | 5% ~ 95% RH | | | |
| | +12VDC | ±5% | +11.4 ~ +12.6V | | Storage | 5% ~ 95% RH | | | |
| | -12VDC | ±10% | -10.8 ~ -13.0V | | Dimensions | 180(D) x 150(W) x 86(H)mm | | | |
| | +5VSB | ±5% | +4.75 ~ +5.25V | | Weight | 3.7kg | | | |
| DC Output Ripple & Noise | Vout | Standard Range | | At Full Load | Protection Funtions | | | | |
| | +3.3VDC | 50mV | | | Over-Current Protection (OCP) | | | | |
| | +5VDC | 50mV | | | Over-Voltage Protection (OVP) | | | | |
| | +12VDC | 120mV | | | Under-Voltage Protection (UVP) | | | | |
| | -12VDC | 120mV | | | Short-Cicuit Protection (SCP) | | | | |
| | +5VSB | 50mV | | | Over-Power Protection (OPP) | | | | |
| | | | | | Over-Temperature Protection (OTP) | | | | |

## 4) ZM1200-EBT Cable Specifications

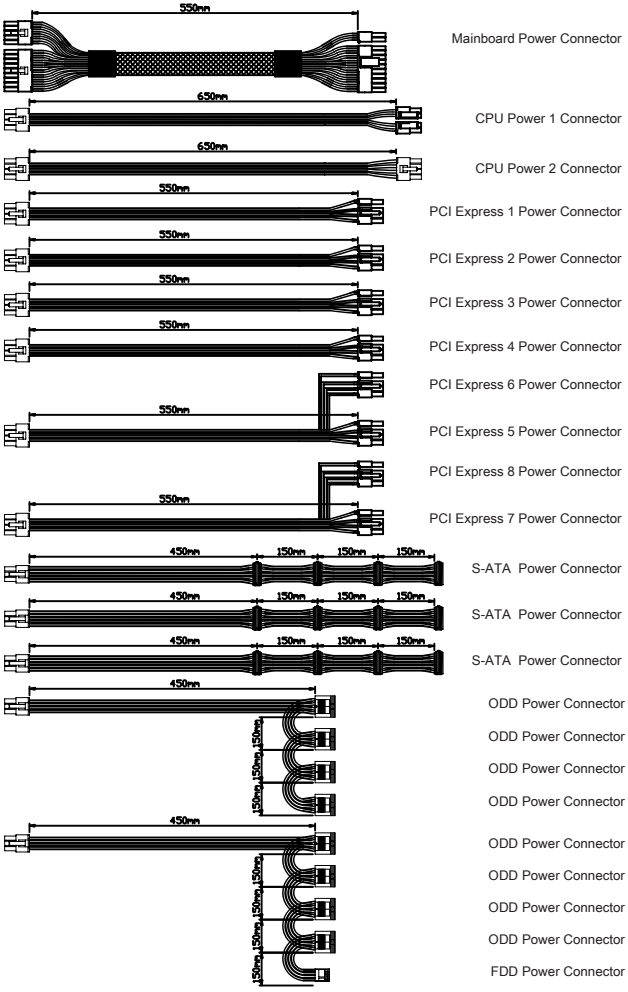

## 4. Certifications




















