

Zadora LED

RS049B LED-40-4.3W-4000-GU10 WH 50W

RS049B - MASTER LED - 40 ° - 4.3 W - 4000 K - GU10 - White - 50 W equivalent

Zadora LED is a range of recessed adjustable downlights for MASTERLEDspot lamps. They come in ready-to-install KIT versions including the MASTERLEDspot MV lamp. MASTER LEDspot delivers huge energy savings and minimizes maintenance cost without compromising on brightness, enabling owners to achieve a return on their investment within one year. The adjustable version offers 30° orientation from the vertical. Both lamps deliver a flux equivalent to that of a 50 W halogen lamp. Zadora LED downlights are available in different color finishes. Maintenance is easy as the lamp can be accessed directly.

Product data

General Information	
Number of light sources	1 pc
Lamp family code	LED [MASTER LED]
Beam angle of light source	40 °
Lamp power	4.3 W
Light source color	840 neutral white
Cap-Base	GU10 [GU10]
Kombipack	Lamp(s) included
Light source replaceable	Yes
Driver/power unit/transformer	Power supply unit regulating
Driver included	Yes
Connection	Screw connection block 3-pole
Protection class IEC	Safety class II
Glow-wire test	Temperature 850 °C, duration 5 s

Flammability mark	For mounting on normally flammable surfaces
Type description	50 W equivalent
CE mark	CE mark
Product family code	RS049B

Operating and Electrical	
Input Voltage	220 to 240 V
Input Frequency	50 to 60 Hz

Controls and Dimming	
Dimmable	Yes

Zadora LED

Mechanical and Housing	
Optical cover/lens material	Polycarbonate

Approval and Application	
Ingress protection code	IP20 [Finger-protected]

Initial Performance (IEC Compliant)	
Initial luminous flux	365 lm
Luminous flux tolerance	+/-10%
Initial LED luminaire efficacy	85 lm/W
Init. Corr. Color Temperature	4000 K
Init. Color Rendering Index	80
Initial chromaticity	(0.38, 0.37) SDCM <5
Initial input power	4.3 W

Over Time Performance (IEC Compliant)	
Driver failure rate at 5000 h	1.5 %
Median useful life L70B50	25000 h
Median useful life L80B50	20000 h
Median useful life L90B50	10000 h

Application Conditions	
Ambient temperature range	-20 to +45 °C
Average ambient temperature	25 °C
Suitable for random switching	Yes (relates to presence/ movement detection and daylight harvesting)

Product Data	
Full product code	871869607013099
Order product name	RS049B LED-40-4.3W-4000-GU10 WH 50W
EAN/UPC - Product	8718696070130
Order code	910503910105
Numerator - Quantity Per Pack	1
Numerator - Packs per outer box	36
Material Nr. (12NC)	910503910105
Net Weight (Piece)	0.260 kg

Dimensional drawing

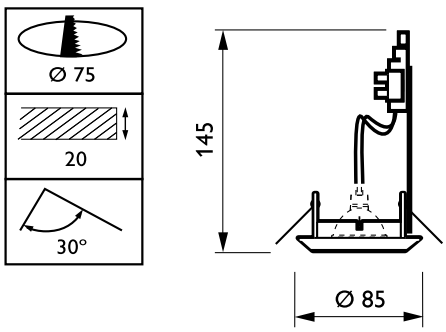

Zadora LED RS049B

© 2017 Philips Lighting Holding B.V. All rights reserved. Philips Lighting reserves the right to make changes in specifications and/or to discontinue any product at any timewithout notice or obligation and will not be liable for any consequences resulting from the use of this publication.