KHYD2 38510

12NC: 851349901000

EAN code: 8003437219597

KitchenAid

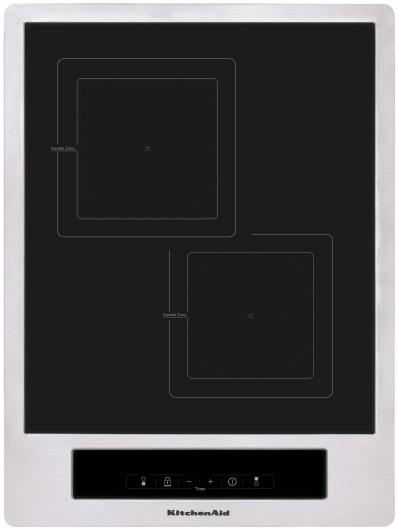

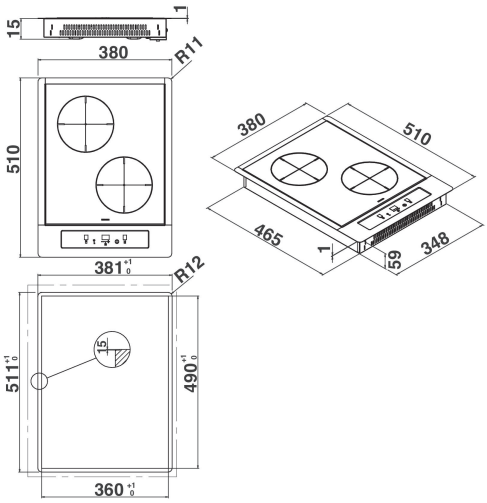

MAIN FEATURES

Product group	Hob
Construction type	Built-in
Type of control	Electronic
Type of control setting and signalling devices	-
Number of gas burners	0
Number of electric cooking zones	2
Number of electric plates	0
Number of radiant plates	0
Number of halogen plates	0
Number of induction plates	1
Number of electric warming zones	0
Location of control panel	Hob Front
Basic surface material	Glass
Main colour of product	Black
Electrical connection rating (W)	3
Gas connection rating (W)	0
Current (A)	12
Voltage (V)	220-240
Frequency (Hz)	50-60
Length of Electrical Supply Cord (cm)	100
Plug type	No
Gas connection	N/A
Width of the product	380
Height of the product	60
Depth of the product	510
Minimum niche height	30
Minimum niche width	360
Niche depth	490
Net weight (kg)	6
Automatic programmes	No

TECHNICAL FEATURES

Power on indicator	Yes
Plate on indicator	2
Type of regulation	N/A
Type of lid	Without
Residual heat indicator	separate
Main on/off switch	Yes
Safety device	-
Timer	Programmable

PERFORMANCES

Energy input	Electric