Instructions for use

KitchenAid

Installation diagrams 4
Important safety instructions 6
Safeguarding the environment 9
Declaration of conformity 9
Before use 9
Existing pots and pans 9
Recommended pot bottom widths 9
Installation 10
Electrical connection 10
Instructions for use 11
After-Sales Service 16

Installation diagrams

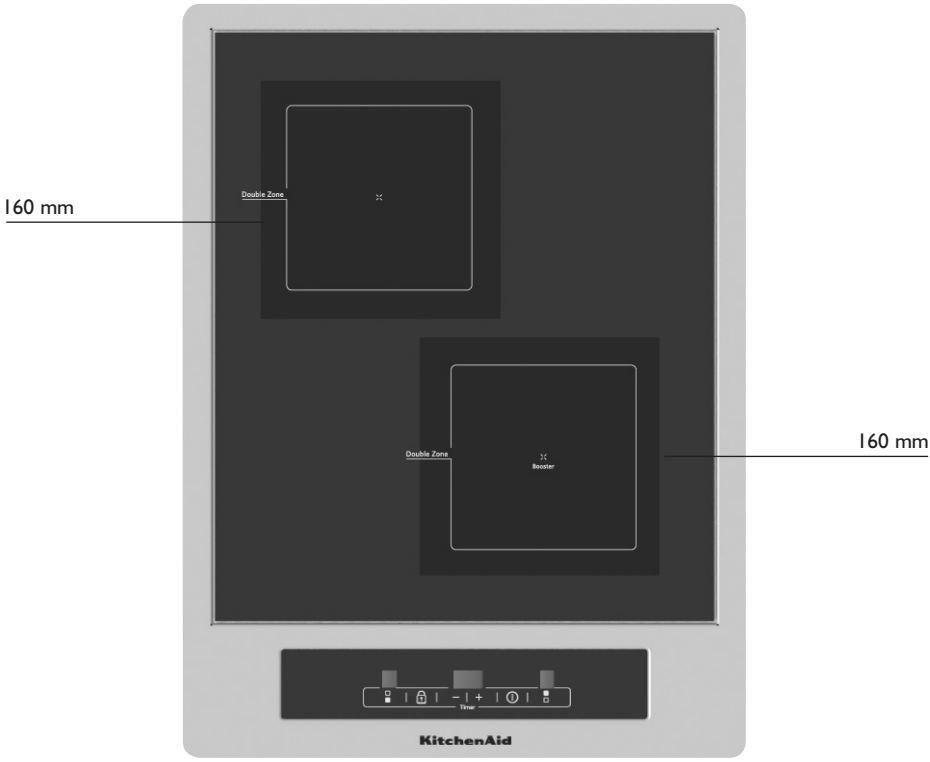

Installation diagrams

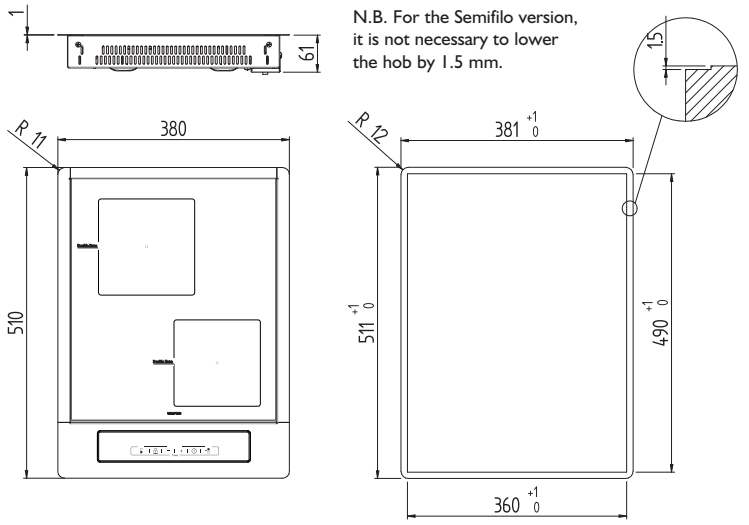

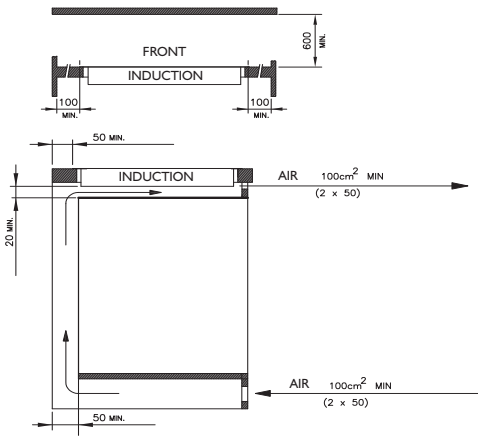

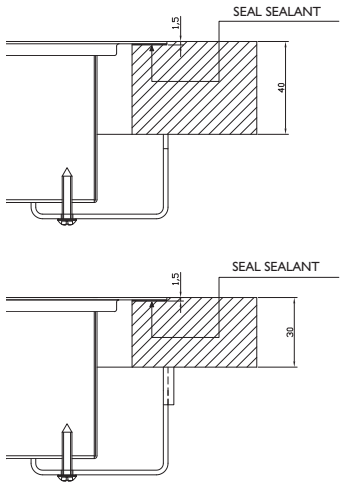

IMPORTANT SAFETY INSTRUCTIONS

YOUR SAFETY AND THAT OF OTHERS IS VERY IMPORTANT

This manual and the appliance itself provide important safety messages, to be read and always observed.



This is the danger symbol, regarding safety, warning of potential risks to users and others.
All safety messages will be preceded by the danger symbol and the following words:

⚠ DANGER	**Indicates a hazardous situation which, if not avoided, will result in serious injury.**
⚠ WARNING	**Indicates a hazardous situation which, if not avoided, could cause serious injury.**

All messages relevant to safety specify the potential risk to which they refer and indicate how to reduce the risk of injury, damage and electric shocks due to incorrect use of the appliance.

Make sure to comply with the following:
- Use protective gloves to perform all unpacking and installation operations.
- The appliance must be disconnected from the power supply before carrying out any installation operation.
- Installation and maintenance must be carried out by a specialised technician, in compliance with the manufacturer's instructions and the local safety regulations in force. Do not repair or replace any part of the appliance unless specifically stated in the user manual.
- The appliance must be earthed.
- The power cable must be long enough for connecting the appliance, fitted in the cabinet, to the power supply.
- For installation to comply with the current safety regulations, an omnipolar switch with minimum contact gap of 3mm is required.

- Do not use multi-sockets or extension cords.
- Do not pull the appliance's power cable.
- The electrical parts must not be accessible to the user after installation.
- The appliance is designed solely for domestic use for cooking food. No other use is permitted (e.g. heating rooms). The Manufacturer declines any liability for inappropriate use or incorrect setting of the controls.
- The appliance and its accessible parts become hot during use. Care should be taken to avoid touching heating elements. Very young (0-3 years) and young children (3-8 years) shall be kept away unless continuously supervised.
- Children from 8 years and above and persons with reduced physical, sensory or mental capabilities or lack of experience and knowledge can use this appliance only if they are supervised or have been given instructions on safe appliance use and if they understand the hazards involved. Children shall not play with the appliance. Cleaning and user maintenance shall not be made by children without supervision.
- Do not touch the appliance heating elements during and after use. Do not allow the appliance to come into contact with cloths or other flammable materials until all the components have cooled down completely.
- Do not place flammable materials on or near the appliance.
- Overheated oils and fats catch fire easily. Pay attention when cooking food products rich in fat and oil.
- A separator panel (not supplied) must be installed in the compartment under the appliance.
- If the surface is cracked, switch off the appliance to avoid the possibility of electric shock. (only for appliances with glass surface).
- The appliance is not intended to be operated by means of an external timer or separate remote control system.
- Unattended cooking on a hob with fat or oil can be dangerous and may result in fire. NEVER try to extinguish a fire with water, but switch off the appliance and then cover flame e.g. with a lid or a fire blanket.

Danger of fire: do not store items on the cooking surfaces.
- Do not use steam cleaners.
- Metallic objects such as knives, forks, spoons and lids should not be placed on the hob surface since they can get hot.
- After use, switch off the hob element by its control and do not rely on the pan detector. (only for appliances with glass surface).

Disposal of household appliances
- This product is built from recyclable or reusable materials. Disposal must be carried out in accordance with local regulations for waste disposal. Before scrapping, cut off the power supply cable.
- For further information on the treatment, recovery and recycling of household appliances, contact the competent local authority, the domestic waste collection service or the shop where you purchased the product.

Safeguarding the environment

Disposal of packing
The packing material is 100% recyclable and marked with the recycling symbol ♺. The various parts of the packing must not be dispersed in the environment, but disposed of in compliance with local regulations.

Disposal
This appliance is marked in conformity with European Directive 2012/19/EU on Waste Electrical and Electronic Equipment (WEEE).
By ensuring that this appliance is correctly disposed of, the user can help prevent potentially negative consequences for the environment and the health of people.

The symbol on the appliance or the accompanying documentation indicates that this product should not be treated as domestic waste but must be taken to an appropriate collection point for recycling WEEE.

Energy saving tips
For optimum results, it is advisable to:
- Use pots and pans with bottom width equal to that of the cooking zone.
- Only use flat-bottomed pots and pans.
- When possible, keep pot lids on during cooking.
- Use a pressure cooker to to save even more energy and time.
- Place the pot in the middle of the cooking zone marked on the hob.

Declaration of conformity CE

This appliance, has been designed, manufactured and marketed in conformity with the safety requirements of “Low Voltage” Directive 2006/95/EC (replacing 73/23/EEC as amended) and protection requirements of “EMC” Directive 2004/108/EC.
This appliance meets the eco design requirements of European regulation N. 66/2014, in conformity to the European standard EN 60350-2.

Before use

IMPORTANT: The cooking zones will not switch on if pots are not the right size.
Only use pots bearing the symbol “INDUCTION SYSTEM” (Figure opposite).
Place the pot on the required cooking zone before switching the hob on.



Existing pots and pans

Use a magnet to check if the pot is suitable for the induction hob: pots and pans are unsuitable if not magnetically detectable.
- Make sure pots have a smooth bottom, otherwise they could scratch the hob. Check dishes.
- Never place hot pots or pans on the surface of the hob’s control panel. This could result in damage.

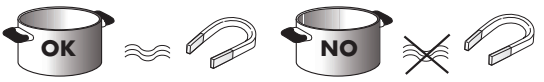

Recommended pot bottom widths

L Ø 16 cm	Ø 10 cm min ➔ 20 cm max

Installation

After unpacking the product, check for any damage during transport.
In case of problems, contact the dealer or the After-Sales Service.
For built-in dimensions and installation instruction, see the pictures in page 5.

PREPARING THE CABINET FOR FITTING

⚠ WARNING

- **The lower part of the product must not be accessible after installation.**
- **Do not fit the separator panel if an undertop oven is installed.**

These instructions are aimed at qualified fitters as a guide to installation, adjustment and maintenance in compliance with the laws and standards in force. The operations must always be carried out with the appliance disconnected from the electricity supply.

Positioning
The appliance is made to be fitted into a counter top, as show in the figure. Apply the sealant supplied around the whole perimeter of the hob. Installation over an oven is not recommended, but if this is necessary, check that:
- the oven has an efficient cooling system;
- there is no passage of hot air from the oven to the hob;
- allow air passages as shown in the figure.

If needing to install multiple Domino products in the same cut-out, the Domino Connector 481010793572 (not included) accessory must be purchased separately from the After-sales Service.
In addition, also order special kit 480121103229 in case of installation in a stone counter top.

Electrical connection

⚠ WARNING

- **Disconnect the appliance from the power supply.**
- **Installation must be carried out by qualified personnel who know the current safety and installation regulations.**
- **The manufacturer declines all liability for injury to persons or animals and for damage to property resulting from failure to observe the regulations provided in this chapter.**
- **The power cable must be long enough to allow the hob to be removed from the worktop.**
- **Make sure the voltage specified on the dataplate located on the bottom of the appliance is the same as that of the home.**

Before connecting to the electricity supply, ensure that:
- the characteristics of the system are such as to satisfy that indicated on the registration plate applied to the bottom of the hob;
- the system has an effective earth connection compliant with the standards and laws in force. Connection to earth is compulsory by law.

If the appliance has no cable and/or plug, use material suitable for the absorption indicated on the registration plate and for the working temperature. The cable must not reach a temperature higher than 50°C above room temperature in any point.

Electrical connection

For direct connection to the network it is necessary to fit an omnipolar switch of a suitable size to ensure disconnection of he network with a contact opening distance that allows complete disconnection in the conditions of the overtension category III, compliant with the installation regulations (the yellow/green earth wire must not be interrupted).
The omnipolar socket or switch must be easy to reach when the appliance is installed.

N.B.:
- The manufacturer declines all responsibility if the usual accident prevention standards and the above instructions are not observed.

If the power cable is damaged, it must be replaced by the manufacturer or by the manufacturer's technical servicing network, or by a similarly qualified operator, to prevent every possible risk.

Connection to the terminal block
For the electrical connection, use an H05RR-F or H05 VV-F cable as specified in the table below.

Wires	Number x size
220-240 V ~ + ⏚	3 x 1,5 mm^2

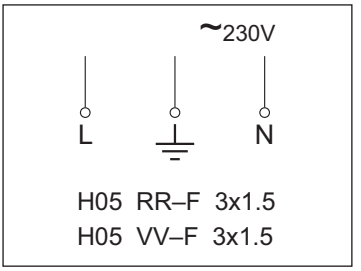

Instructions for use

Operating principle
This is based on the electromagnetic properties of most cooking containers.
The electronic circuit governs the operation of the coil (inductor), creating a magnetic field.
The heat is transmitted by the container to the food.
Te cooking process takes place as follows:
- minimum dispersion (high performance);
- the removal of the pan (simply lifting it) automatically stops the system;
- the electronic system allows maximum flexibility and precision of regulation.

Installation
All installation operations (electrical connection) must be carried out by people qualified in compliance with the laws in force.
For specific instructions, see the installation section.

Important: This apparatus is not suitable for use by person (children included) with reduced mental and physical capacity or with lack of experience and knowledge unless having previously received suitable training fot its use by persons responsable for their safety.

It must be ensured that children do not play with the apparatus.

Use
First of all, position the pan in the chosen cooking area.
The absence of the pan display U means the system cannot start.

Instructions for use

On/off of the Touch Control

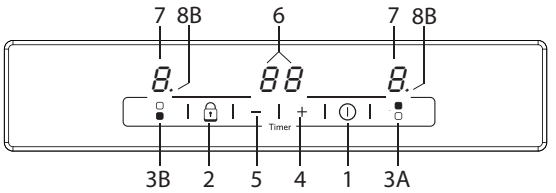

1. On/off
2. Child Safety (key lock)
3. Cooking area selection button (A-B)
4. Power increase
5. Power Decrease
6. Timer
7. Cooking point display
8. Timer Led (A-B)

The electronic Touch Control is activated by means of the ON/OFF button and switches from the OFF mode to the Standby mode.
To do so it is necessary to press the ON/OFF button for 1 second. A short Beep will be heard.
When in standby, “0” is displayed on the display of the cooking zone.
This display may go into background due to a residual heat or error signal.
If a cooking zone is activated during the standby time (10 sec.), the control switches over to the On mode.
If no introduction is made within the 10 sec., the control automatically switches to OFF with a short beep.
The electronics can be switched to the OFF mode at any time during the ON mode or the Standby mode by pressing the ON/ OFF button. The Off function has priority when operating, meaning that the control switches off even by activating several buttons at the same time.

Switching on a cooking zone
In standby or active mode, a cooking area can be selected by pressing the 3A or 3B buttons (cooking area selection).
After selecting the cooking area, you can touch the “+” button to go from level “0” to “1”, “2”, etc. ... but if, instead, you press the “-” button, the heat setting goes to level “9”.
When you activate both cooking areas, you will notice that the last one selected will have a brighter cooking point display (7).

Switching off a cooking zone
a) Simultaneously pressing the cooking area selection button (3A or 3B) and the “-” button.
b) Selecting cooking level “0” of the desired cooking zone with the “-” button

If the last cooking zone is switched off, the control switches to the OFF mode after 10 sec. if nothing else is switched on.
All cooking zones are switched off immediately by pressing the ON/OFF button.

Cooking and power levels
The cooking and power levels of the cooking zones are shown on the display with 7 allotted segments. The power of the cooking points can be adjusted to 9 levels and the numbers “1” to “9” and displayed, plus the letter is “P” is displayed when the Booster function is activated.

Residual heat indicator
Indicates to the user that the glass is at a dangerous temperature if in contact with the area over the cooking zone. The temperature is determined by means of a mathematical model and possible residual heat is indicated by “H” on the corresponding 7 segment display.
Heating and cooling are calculated based on:
- The selected power level (from “0” to “9”);
- The relay activation time after the cooking zone has been switched off.
The corresponding display shows “H” until the zone temperature drops below the critical level (< 60 °C) according to the mathematical model.

Timer function



The Timer function can be used as a timer for the cooking point or as an independent alarm clock. The two rear 7-segment displays (6) are also used for displaying the remaining time in minutes, until the timer alarm goes off.

Timer selection

The simultaneous activation of the “+” and “-” is used for selecting the timer function.
There are two different timer modes:

- Timer for the cooking point (the timer is assigned to a cooking point). When the set time runs out, there is an audible and visual signal and the relative cooking point turns off.
- Independent alarm (the timer works without reference to a cooking point)
- If an independent alarm timer is set, only the display (6) will turn on, but if you have programmed a timer associated with a cooking are, the LED “8A” or “8B” will be on.

When the set time runs out, there is an audible and visual signal in this mode as well, but the cooking points are not turned off.

Selecting a timer:

a timer is selected by simultaneously pressing the plus and minus keys with the control activated. If you have previously selected a cooking point, the timer of that cooking point will light up. Plus, this will be indicated by the flashing decimal point on the display (LED timer 8A-8B) of the cooking point. If no cooking point had been previously selected, the cooking alarm timer will be activated. In this case, all the decimal points will be off (8A - 8B).
If different timers are active, you can select the desired timer by pressing the plus and minus keys several times. The timers of the active cooking points will be turned off in clockwise order. After the last cooking point timer, the cooking alarm timer will be selected and after that the first cooking point timer will be selected again. The selection time is 10 seconds. This time is set from scratch at each change of the value of the timer by pressing the plus or minus key.
When this time runs out, the timer with the shortest time set will be displayed. You can end the selection early by selecting a cooking point.

Setting the timer value:

when a timer has been selected, you can change the timer value using the plus or minus keys.
If a timer value has not been set, pressing the minus key will set a value of 30 minutes, which can then be changed. By holding down the plus or minus key longer, the set value will change faster. At a setting value of 99 or 01, the automatic repeat will automatically stop. If the timer of a cooking point is set, this will be indicated on the related timer LED (8A-8B) of the cooking point, even at the end of selection, by a static or flashing decimal point (static if the timer is set but not displayed because there are other timers with less time) (flashing if the timer is set and is displayed because it is the timer with the shortest time). In the case of setting a generic cooking timer.

Turning off the timer early:

You can turn off the timer by setting the timer value to 00. In the case of a cooking point timer, the corresponding cooking point will stay on. Counting down the time set on the timer: the time countdown starts as soon as a timer is set. If the value is changed using the plus or minus keys, the timer starts on a full minute and any seconds that may have elapsed are cancelled.

Signal of a timer whose set time has run out

If the timer value has reached 00, this will be indicated by an audible and visual signal. If a cooking point timer has reached the set value, the corresponding cooking point will be turned off. Any cooking points or timers selected will be deselected.
The timer value (00) is automatically displayed again and flashes. If it is a cooking point timer, the corresponding decimal point will also flash. The signal lasts for 2 minutes, unless it is stopped earlier by pressing any key.
After the signal, all the active cooking point displays will be visible again.

Control panel lock - BASIC



Locking/activating Control panel lock:
Pressing the Control panel lock button in standby or active mode locks the keypad; the stylized key symbol lights up. The control continues to operate in the previously set mode but can no longer be controlled by other buttons, except by the Control panel lock button or the ON/OFF button. Switching off with the ON/OFF button is also possible when locked. The Control panel lock button LED switches off when the Touch control and Control panel lock function are switched off. The LED lights again if reactivated (within 10 sec.) until it is deactivated by pressing the Control panel lock button once again. The activation/deactivation of the Control panel lock function is not possible in the OFF mode.

Unlocking/ deactivation of the Control panel lock - BASIC
Pressing the Control panel lock button again in standby or active mode unlocks the keypad and the stylized key symbol turns off. All sensor buttons can be pressed again.

Control panel lock - EXTENDED
The Control panel lock can be activated after turning on the Touch pad by simultaneously pressing the area selection button in the lower right (3A) and the MINUS (5) button and then pressing the area selection button in the lower right area (3A) again. There will be an “L” , meaning LOCKED (Control panel lock feature against unintended switching-ON). If a cooking zone is in the “hot” condition, “L” and “H” will be displayed in alternation. This course of operation has to take place within a period of 10 seconds, no other key than described above may be operated. Otherwise the input will be interrupted because of incompleteness, the cooktop will not be locked then. The electronic control remains in a locked condition until it gets unlocked, even if the control has been switched-OFF and -ON in the meantime. Also a reset of the control (after a voltage drop) does not cancel the key lock.

Partial unlock of the buttons for cooking:
To unlock the Touch pad simultaneously press the cooking area selection button in the lower right (3A) and the MINUS (5) button. “L“ (LOCKED) in the display extinguishes and all cooking zones show “0“ with a blinking dot. Should a cooking zone be “hot”, “H” is displayed instead of the static “0”. After switching-OFF the control, the Control panel lock feature is active again.

Permanent removal of the key lock:
After switching-ON the control the Control panel lock feature can be deactivated. You must simultaneously press the cooking area selection button in the lower right (3A) and then press the MINUS (5) button alone. If all steps have been carried out in the right order within 10 seconds the key lock gets cancelled and the control is OFF. Otherwise the input will be considered incomplete, the control remains locked and switches-OFF after 20 seconds.
After a renewed switching-ON by means of the ON/OFF key all displays show „0“, the display dots are blinking and the control is ready for cooking. If a cooking zone is “hot“ , “H“ will be displayed instead of the static „0“.

Booster and induction power management
The cooking area B has a Booster function that goes from 1400 to 2000 W (during this power increase, the power of cooking area A is reduced). The generator, with Booster On, gives the cooking zone power that is significantly greater than the rated output. The booster allows a particularly rapid heating of the food thereby saving the user time.
The Booster function can be activated as follows:
- The cooking zone must be at the maximum possible level;
- The Booster function is activated by pressing the “+” button again. A fixed “P” is displayed on the indication of the cooking zone.

For safety reasons, the Booster function for each cooking zone can only be activated for a limited time of 5 minutes. If the pan is removed from the cooking zone during the Booster time, the Booster function remains on and also the Booster time is not deactivated.
The Booster is switched off by pressing the “-“ button. The “+” has no effect whatsoever.

Instructions for use

Precautions

If there is even the tiniest crack in the ceramic glass surface, immediately disconnect the hob from the electricity supply.

- During operation, move any magnetic materials such as credit cards, computer disks, calculators, etc., away from the area.
- Never use cooking foil or rest products wrapped in foil directly on the hob.
- Metallic objects such as knives, forks, spoons and lids must not be rested on the surface of the hob to prevent them from heating up.
- When cooking with non-stick containers, without using water or oil, limit any preheating time to one or two minutes.
- When cooking foods which tend to stick to the bottom of the pan, start at minimum power and gradually increase the heat, stirring frequently.
- After use, switch off correctly (decreasing to “0”) and avoid relying on the pan sensor.

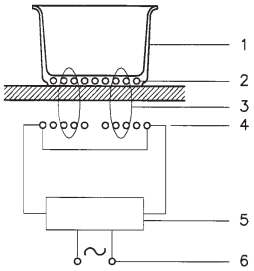

1. Vassel
2. Induced current
3. Magnetic field
4. Inductor
5. Electronic circuit
6. Power supply

Pans

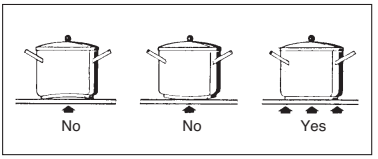

- If a magnet is attracted by the bottom of a container, the container is suitable for induction cooking;
- prefer pans declared as suitable for induction cooking;
- flat, thick-bottomed pans;
- a 20 cm diameter saucepan can benefit from maximum power;
- a small saucepan reduces the power but will not cause energy dispersion. The use of containers with a diameter of less than 10 cm is not recommended;
- stainless steel containers with multilayer bottom or ferrite stainless steel if the bottom indicates: for induction;
- cast iron containers, better with an enamelled bottom to avoid scratching the ceramic glass hob;
- containers made of glass, ceramic, terracotta, aluminium, copper or non-magnetic stainless steel (austenitic) are not recommended and are unsuitable.

The pan to use with the wok induction model must be semi spherical.

Maintenance

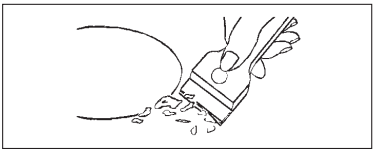

By means of a scraper immediately remove any alluminium foil bits, food spills, grease splashes, sugar marks and other high sugar-content food from the surface in order to avoid damaging the hob.
Subsequently clean the surface with some paper towel and SIDOL or STANFIX, rinse with water and dry by means of a clean cloth.
Under no circumstance should sponges or abrasive cloths be used; also avoid using aggressive chemical detergents such as oven sprays and spot removers.

DO NOT USE STEAM CLEANERS

After-Sales Service

Before contacting the After-Sales Service

1. Switch the appliance off and then on again it to see if the problem has been eliminated.

If the problem persists after the above checks, contact the nearest After-Sales Service.

Always specify:

- a brief description of the fault;
- the product type and exact model;
- the Service number (the number after the word Service on the rating plate), located under the appliance (on the metal plate).
- your full address;
- your telephone number.



If any repairs are required, contact an authorised After-Sales Service Centre (to ensure the use of original spare parts and correct repairs). Spare parts are available for 10 years.



FOR THE WAY IT'S MADE.

Printed in Italy
05/15

400010795483

GB