Assembly instructions

KitchenAid

Important safely instruction 4
Children safety 4
Characteristics of the appliance and installation requirements 5
Installation niche features: built-in 6
Installation niche features: integrated 7
Preparing the installation 8
Electrical and Water connection 9
Levelling 10
Decorative door and bottom-drawer panels layout - built-in 11
Preparing the decor panels for the built-in Refrigerator 13
Preparing the decor panels for the built-in Refrigerator with glass door 14
Dimensions of built-in panels 15
Mounting panels to the door and the drawer - built-in 16
Installation 18
Anti-tipping safety assembly 23
Ventilation 24
Post installation control 25
Start up 25

Important safely instruction

Symbols used in the Guide

Note
Tips for the correct use of the appliance

Important
Directions to avoid appliance damage

Warning
directions to prevent injury

Children safety

If this appliance is replacing an existing appliance which must be removed or disposed of, make sure that it does not become a dangerous trap for children by cutting its power supply cable and rendering it impossible to close the door.
Use the same caution at the end of the lifespan of the new appliance.

Characteristics of the appliance and installation requirements

Dimensions of Built-in/Integrated appliance
60cm: l: 587 mm (23 1/8” in)/ h: 2050 mm (80 3/4” in)/ w: 575 mm (22 5/8” in)
75cm: l: 737 mm (29” in)/ h: 2050 mm (80 3/4” in)/ w: 575 mm (22 5/8” in)
90cm: l: 887 mm (35” in)/ h: 2050 mm (80 3/4” in)/ w: 575 mm (22 5/8” in)

Dimensions of Built-in/Integrated appliance complete with packing
60cm: l: 650 mm (25 5/8” in) / h: 2210 mm (87” in)/ w: 800 mm (31 1/2” in)
75cm: l: 800 mm (31 1/2” in)/ h: 2210 mm (87” in)/ w: 800 mm (31 1/2” in)
90cm: l: 950 mm (37,4 in)/ h: 2210 mm (87” in)/ w: 800 mm (31 1/2” in)

Weight with packing
60cm: maximum 230 kg (507 lb)
75cm: maximum 275 kg (606 lb)
90cm: maximum 295 kg (650 lb)

Power supply voltage
AC 220-240V 50 Hz

Power cord
Supplied without plug

Drinking water supply pressure
from 0.05 MPa to 0.5 MPa (0.5 Bar - 5 Bar)

Water supply line
provided, 3/4” female connector, food-grade

Accessories for installation provided
fixing kit for custom panels
anti-tipping kit
side connection kit
4 mm (1/8” in) allen wrench

Tools required
phillips head screwdriver
wood and hammer drill
2.5 mm (1/8” in) wood drill bit
8 mm (3/8” in) masonry drill bit
17 mm (3/4” in) open-end wrench

Installation niche features: built-in

A: area to be left clear for the anti-tipping brackets

E: area to be left clear for the power supply cable

W: and water supply hose

Minimum Niche Height
2064 mm (81 1/4” in)

Minimum Niche Width
90cm: 900 mm (35 1/2” in)
75cm: 750 mm (29 5/8" in)
60cm: 600 mm (23 3/4” in)

Door Swing Clearance
90cm: 1435 mm (56 1/2" in)
75cm: 1285 mm (50 5/8" in)
60cm: 1135 mm (44 3/4" in)

Door Opening Angle
105°

Width
90cm: 899 mm (35 3/8" in)
75cm: 749 mm (29 1/2" in)
60cm: 599 mm (23 5/8" in)

Height
2050 mm (80 3/4" in) ± 25 mm (1" in)

Depth with door (without panel)
575 mm (22 5/8” in)

Important: A 90° door opening is sufficient to allow opening and full extraction of the inner drawers, even if the appliance is installed directly adjacent to a wall. Should an opening at 105° be desired, then the appliance should be positioned at the distance from the wall described in figure.

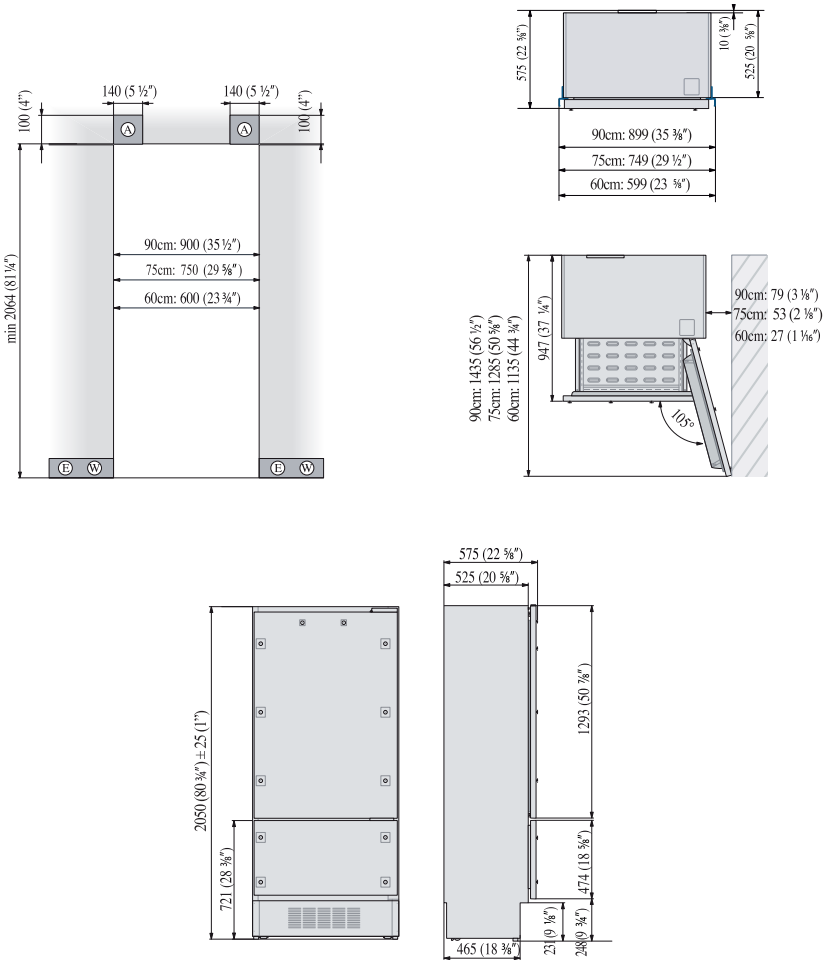

Dimensions in parentheses are in inches.

Installation niche features: integrated

A: area to be left clear for the anti-tipping brackets

E: area to be left clear for the power supply cable

W: and water supply hose

Minimum Niche Height
2064 mm (81 1/4” in)

Minimum Niche Width
90cm: 900 mm (35 1/2” in)
75cm: 750 mm (29 5/8" in)
60cm: 600 mm (23 3/4” in)

Door Swing Clearance
90cm: 1435 mm (56 1/2" in)
75cm: 1285 mm (50 5/8" in)
60cm: 1135 mm (44 3/4" in)

Door Opening Angle
105°

Width
90cm: 899 mm (35 3/8" in)
75cm: 749 mm (29 1/2" in)
60cm: 599 mm (23 5/8" in)

Height
2050 mm (80 3/4" in) ± 25 mm (1" in)

Depth with door
600 mm (23 3/4” in)

Important: A 90° door opening is sufficient to allow opening and full extraction of the inner drawers, even if the appliance is installed directly adjacent to a wall. Should an opening at 105° be desired, then the appliance should be positioned at the distance from the wall described in figure.

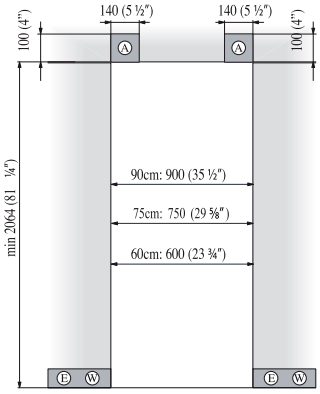

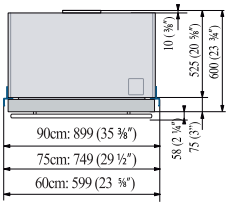

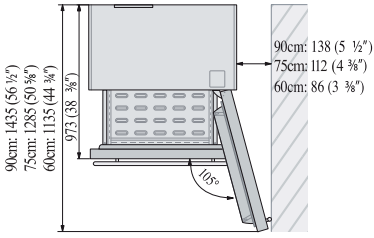

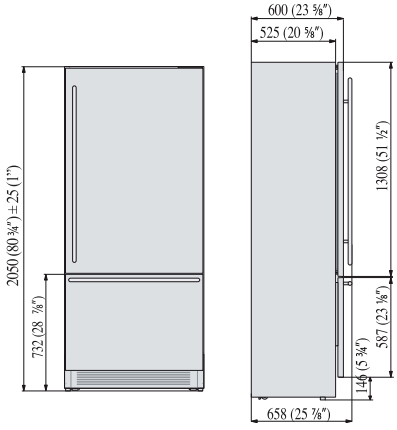

Dimensions in parentheses are in inches.

Preparing the installation

Transport to installation site and unpacking

Since this is a large and heavy appliance, before transporting the appliance, check the access to the location where it will be installed (door size, manoeuvring space in stairwells, etc.).

The appliance is attached to the base of the packaging (pallet) through four bolts which can be removed using a 17 mm (3/4" in) wrench.
It is recommended to use a manual transporting device to move the appliance to the installation site, and only at this point to remove the base of the packaging.

The appliance should always be transported in an erect position.
If this is not possible, transport the appliance laying on its rear side.

Once at the installation site, the appliance, which is equipped with four wheels, can be taken off the pallet and positioned in the installation area.

Operate as follows:

- Take off the four bolts **1** securing the appliance to the pallet by means of a 17 mm (3/4" in) open spanner. Remove the fixing brackets **3** and **4**.
- To remove the front fixing bracket **3**, unscrew for one or two turns the rear wheel adjusting bolt **2** by means of a 13 mm (1/2" in) box spanner, avoiding too much strenght while thightening the nut, which could damage the leveling feet adjusting system.
- From the back of the unit and by means of a suitable, high duty hand trolley, take off the appliance and place it on the floor.

Be very careful to avoid any damage to floors.
Delicate floors should be protected with plywood, hard cardboard or similar material panels.

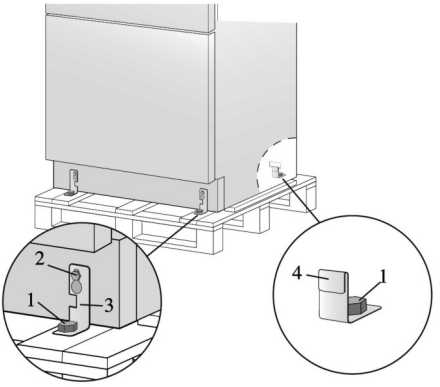

⚠ **The appliance is very heavy.**
Take maximum care during handling to avoid injury.

⚠ **The appliance should always be transported in an erect position.**
Avoid at all costs leaning it on its front side.

Electrical and Water connection

Electrical connection requires use of a European 16A Schuko socket or UK 13A socket with earth connection, controlled by an easily accessible omnipolar switch.

To connect to the water supply system (for appliances equipped with ice makers) a tap with a male 3/4" connection should be provided, which must also be easily accessible once the appliance is installed.
The appliance is provided with a water supply hose and seal kit which is suitable for high water pressure and complies the Food Regulations.
The water filter cartridge, which is provided with the appliance, should be installed according to the accompanying instructions.
Use only the new hose and the new gaskets which are supplied with the appliance. Discard any hose and gasket which may have already been installed.

Electrical cord length: 2,0 mt (78 3/4" in)
Water connection line length: 2,5 mt (98 3/8" in)

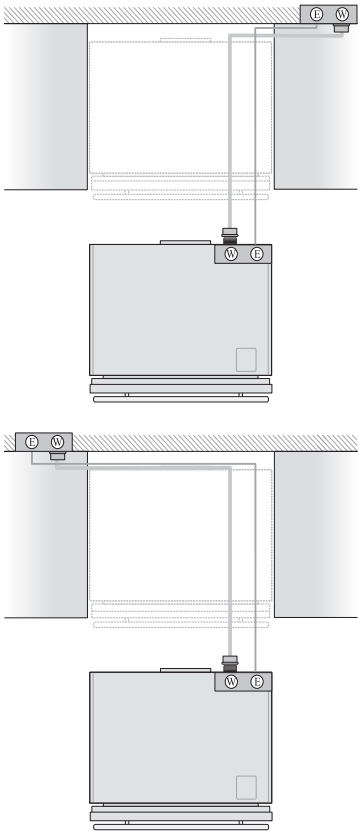

Energy: Alternatives and Home Automation

If energy is supplied through an alternative energy power source (solar, geothermal, etc..) or if home automation systems are installed, it is necessary to install the Alternative Energy Kit to integrate the unit into the power grid.

The filter cannot make it safe to drink any water which is not suitable for human consumption.

The appliance should be connected only to a drinkable water supply system.

Do not use extension cords or adapters.
Once the appliance has been connected to the water system, turn the Ice Maker off (touch the button on control panel to switch it off) before the main water is shut off.

Electrical and Water connection

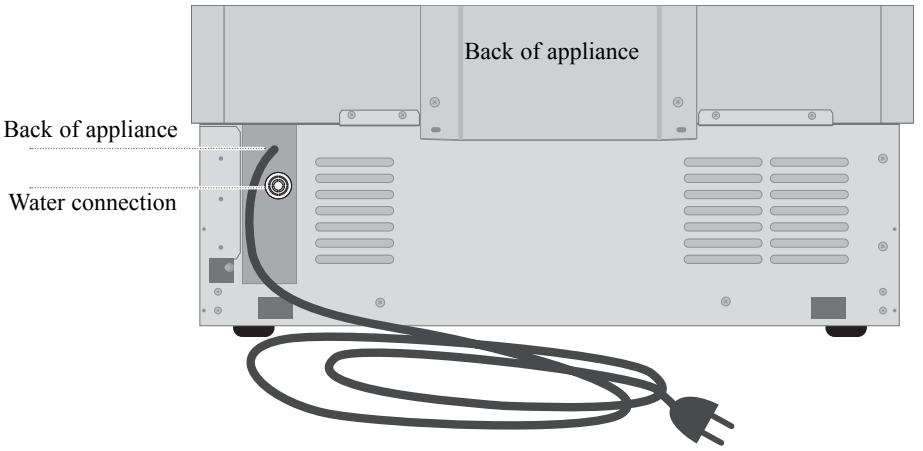

Operate as follows:

- Unwind the electric cable and connect it directly to the wall socket.
- Make sure the appliance is in the Stand-by condition and that all lights are off; should it be not so press the Unit button ⏻ to switch it off.
- Fit one end of the water hose onto the connector at the appliance's back **1**.
- Fit the other end of the hose to the water tap, use the gaskets provided in the Owner's Kit **2**.

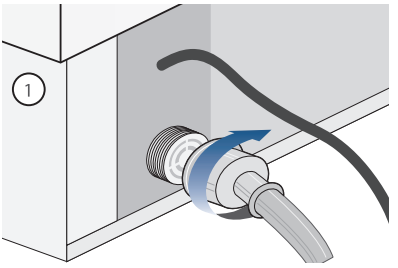

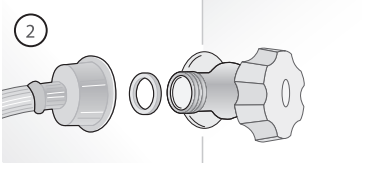

Levelling

Adjust the appliance level by means of the front levelling feet and the rear adjustable wheels.

Operate as follows:

- After removing the bottom plinth or grille (it is kept in position by magnets), adjust the height of the levelling feet **1** by means of a 17 mm (3/4" in) open spanner.
- Then adjust the height of the rear wheels by turning the front adjusting bolts **2** clockwise or anticlockwise as it may be required.
- Remount the bottom plinth or grille.

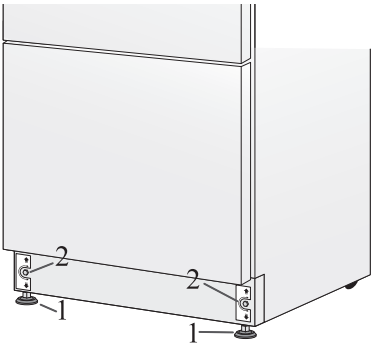

Decorative door and bottom-drawer panels layout - built-in

The dimensions of the panels are indicated in the table and drawings on pages 18-21.

Nevertheless, according to the requirements for aligning with other kitchen structures, the door panel can be higher than the upper edge of the refrigerator door, and the drawer panel can be lower than the edge of the drawer.

The panels must be mounted using special braces which attach to adjustable devices provided on the door and drawer and with brackets that anchor and adjust the panel's vertical direction.

Braces, brackets and fixing screws are provided with the appliance and must be applied to the panel as indicated.

Operate as follows:

To prepare the panels to be mounted on the appliance, follow these steps, working on the back of the panel.

Door Panel

- Trace, a line dividing the panel width in half **1**.

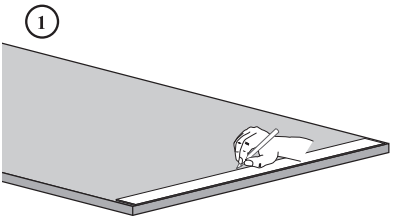

- Starting form the Bottom edge of the panel, mark the positioning of the brackets **2**.

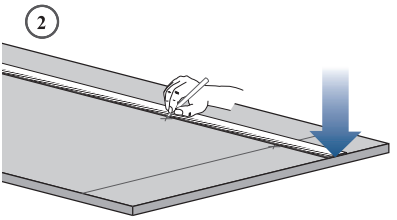

- Following the corresponding table, mark the external and then the internal hole **3**.

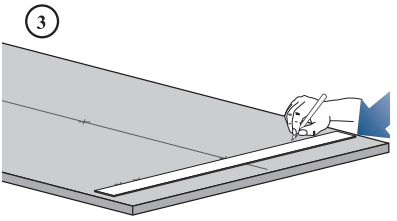

Decorative door and bottom-drawer panels layout - built-in

- Position the brackets on each set of marks to make sure they are aligned **4**, then drill holes through the panel (pay close attention to the panel's thickness) **5**.

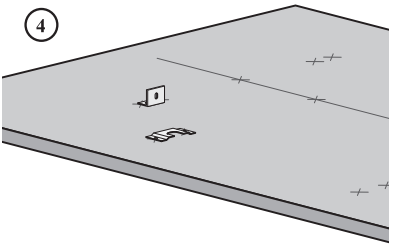

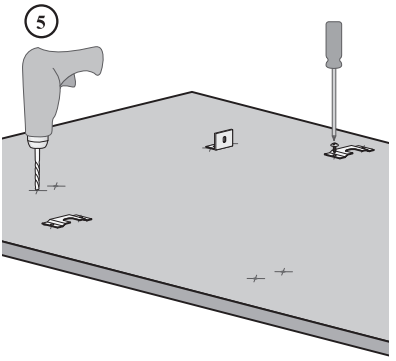

- Screw the brackets in place **6**.

Drawer Panel

- When preparing the Drawer Panel, follow the same instructions as per the door panel, but make sure measurements are taken starting from the top edge **7**. The support bracket faces the opposite way **8** (note imgs **4** and **8**).

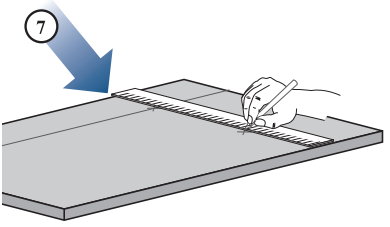

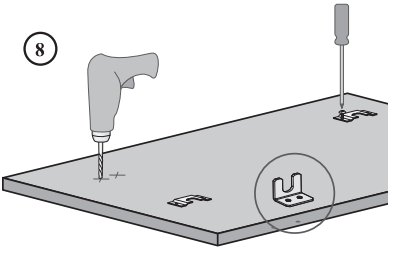

Preparing the decor panels for the built-in Refrigerator

	90cm		75cm		60cm	
	Hinge Left	**Hinge Right**	**Hinge Left**	**Hinge Right**	**Hinge Left**	**Hinge Right**
A	897 (35 1⁄4”)	897 (35 1⁄4”)	747 (29 3/8”)	747 (29 3/8”)	597 (23 1/2”)	597 (23 1/2”)
B	355,5 (14”)	261 (10 1/4”)	279 (11”)	187 (7 3⁄8”)	205 (8 1⁄8”)	111 (4 3⁄8”)
C	261 (10 1/4”)	355,5 (14”)	187 (7 3⁄8”)	279 (11”)	111 (4 3⁄8”)	205 (8 1⁄8”)
D	418 (16 1/2”)	386 (15 1/4”)	343 (13 1⁄2”)	311 (12 1⁄4”)	276,5 (10 7⁄8”)	236,5 (9 3⁄8”)
E	386 (15 1/4”)	418 (16 1/2”)	311 (12 1⁄4”)	343 (13 1⁄2”)	236,5 (9 3⁄8”)	276,5 (10 7⁄8”)
F/G	354,5 (14”)	354,5 (14”)	279,5 (11”)	279,5 (11”)	203,5 (8”)	203,5 (8”)

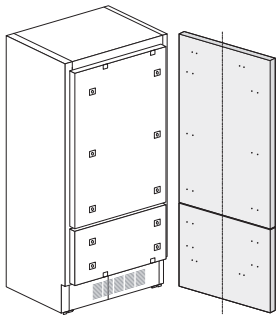

Holes positions

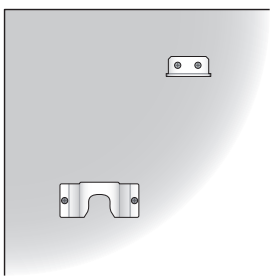

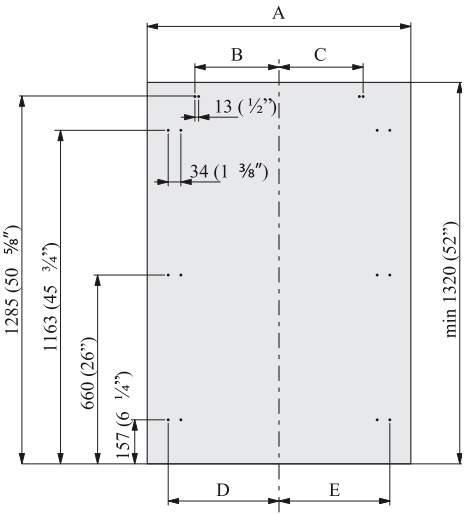

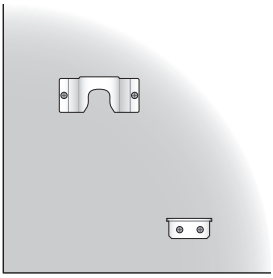

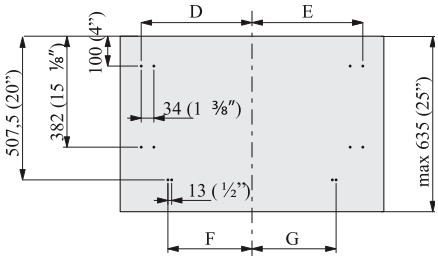

Preparing the decor panels for the built-in Refrigerator with glass door

	90cm		60cm	
	Hinge Left	**Hinge Right**	**Hinge Left**	**Hinge Right**
A	897 (35 3⁄8”)	897 (35 3⁄8”)	597 (23 1/2”)	597 (23 1/2”)
D	418 (16 1/2”)	386 (15 1/4”)	276,5 (10 7⁄8”)	236,5 (9 3⁄8”)
E	386 (15 1/4”)	418 (16 1/2”)	236,5 (9 3⁄8”)	276,5 (10 7⁄8”)
F/G	354,5 (14”)	354,5 (14”)	203,5 (8”)	203,5 (8”)
H	417 (16 3/8”)	384 (15 1/8”)	275 (10 7⁄8”)	235 (9 1⁄4”)
I	384 (15 1/8”)	417 (16 3/8”)	235 (9 1⁄4”)	275 (10 7⁄8”)

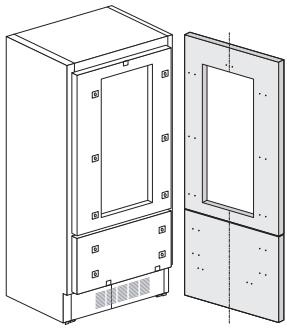

Door window dimensions

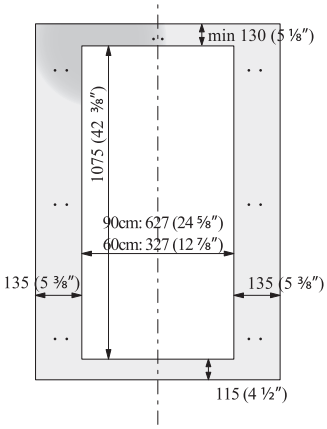

Holes positions

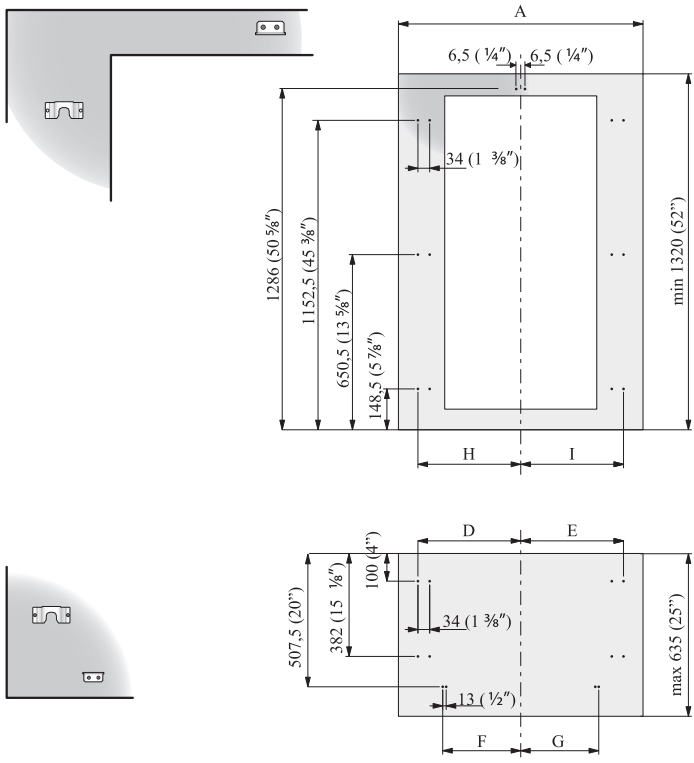

Dimensions of built-in panels

Series	Door/Drawer Width A	Door Cutout Width B
90cm	897 (35 1/4”)	627 (24 3/4”)
75cm	747 (29 3/8")	
60cm	597 (23 1/2”)	327 (12 7/8”)

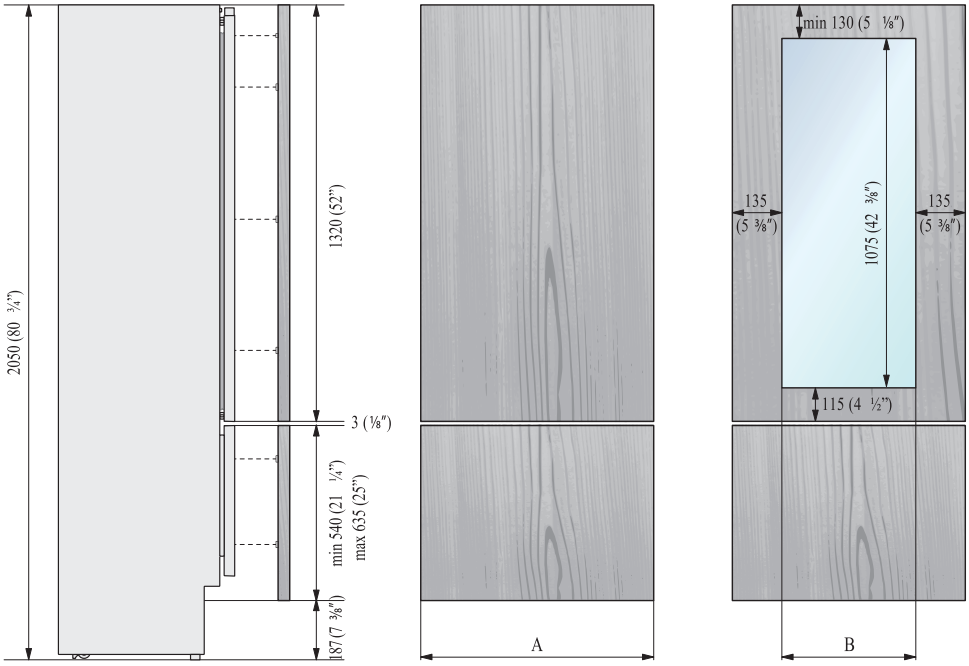

Examples of calculation
Integration in a kitchen column of total height 2160 mm (85” in) and 150 mm (6” in) kickplate.
(NOTE: In calculating the adjustment foot is considered to 0).

Drawer Calculation:
Kickplate 187 - 150 = 37 mm (1 1/2” in) → 540 + 37 = **577** mm (**22 3/4”** in)

Upper Panel Calculation:
2160 - 2050 = 110 mm (4 3/8” in) → 1320 + 110 = **1430** mm (**56 1/4”** in)

Total Height Calculation:
150 + 577 + 3 + 1430 = **2160** mm (**85”** in)

Mounting panels to the door and the drawer - built-in

Once all brackets and small brackets have been applied to the panels, you can begin installing the bottom drawer.

Operate as follows:

- Partially tighten the screw to the fixing **1**.

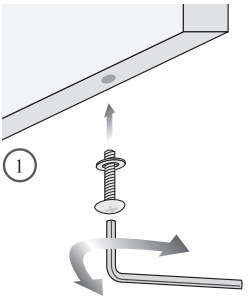

- Hook the bottom drawer panel starting from the fixings on the bottom **2**.

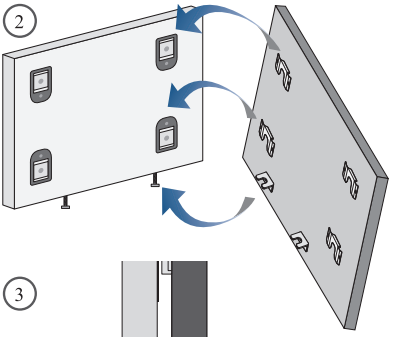

- It is now possible to align panels to adjacent cabinets in height using the lower alignment brackets, **3** tightening or untightening the screws into position as needed. With the screw slighty tightened, move the panel sideways to align it to the other panels on the unit or other adjacent structures..

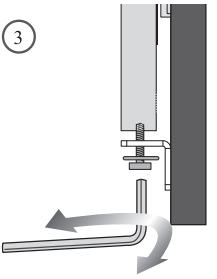

- Depth alignment: working from the inside of the drawer, after lifting up the magnetic seal, adjust the panel position so it is closer to or further away from the door using the holes **4** and then secure the panel using the holes **5.**

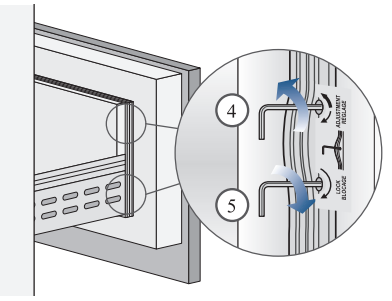

Once the front panel has been adjusted, check that the gasket has been repositioned correctly to assure the door/drawer are closing correctly and avoid operational errors of the unit.

Mounting panels to the door and the drawer - built-in

- Hook the panel to the fixing devices starting from the top aligning brackets **6**.

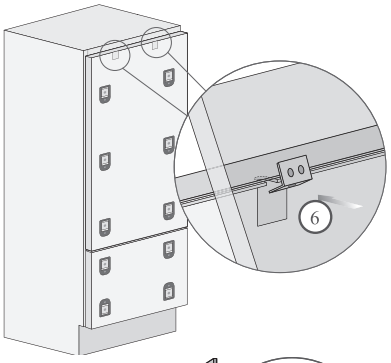

- At this point, alignment between the panel and adjacent cabinets can be adjusted using the alignment brackets and small brackets **7** and **8**.

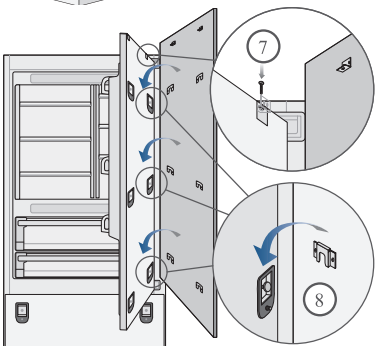

- Vertical alignment: tighten or loosen the screw in the brackets to raise or lower the panel **9**.

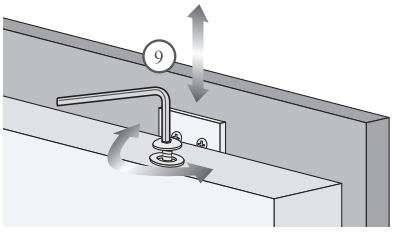

- Depth alignment: working from the inside of the door, after lifting up the magnetic seal, adjust the panel position so it is closer to or further away from the door using the holes **10** and then fix the panel in position using the holes **11**.

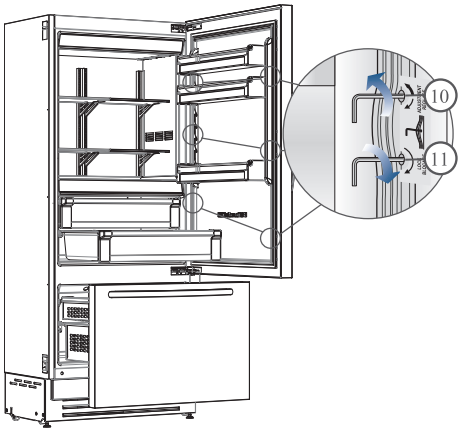

ⓘ **Once the front panel has been adjusted, check that the gasket has been repositioned correctly to assure the door/drawer are closing correctly and avoid operational errors of the unit.**

Installation

Built-in installation single appliance

For a built-in installation, to close gaps between the appliance and the adjacent cabinets, special side profiles and aluminum covering frames are provided.

Operate as follows:

- Push the appliance into the installation niche **1**.

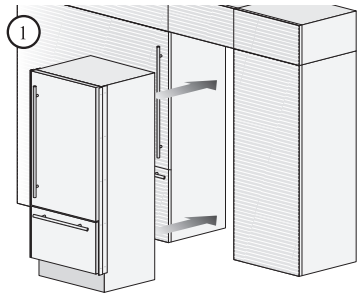

- If the unit is to be installed inside a niche or within an enclosed structure, it is necessary to design a ventilation shaft at the back of the niche to assure proper ventilation at the back of the unit. A 5 mm gap is sufficient to prevent overheating. Always mount front panels on door and drawer before pushing the unit into its final position inside the niche or structure.

- Secure the appliance to the adjacent cabinets by fixing to these the side profiles previously mounted on the appliance **2**.
  To make this operation easier keep the door and the drawer open.

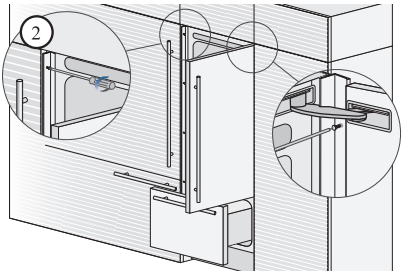

- Secure the appliance to the adjacent cabinets by fixing to these the side profiles previously mounted on the appliance 2 .
  To make this operation easier keep the door and the drawer open.
  Check the levelling of the appliance, adjusting its feet and wheels to correct it.

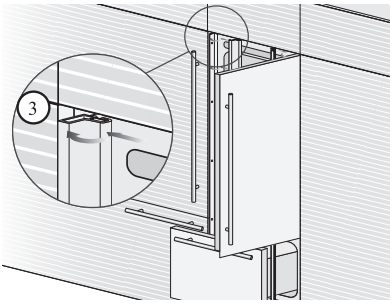

- Mount the profiles the covering frames: first insert them laterally and then push firmly until a “click” is heard **3**.

Side profiles mounting

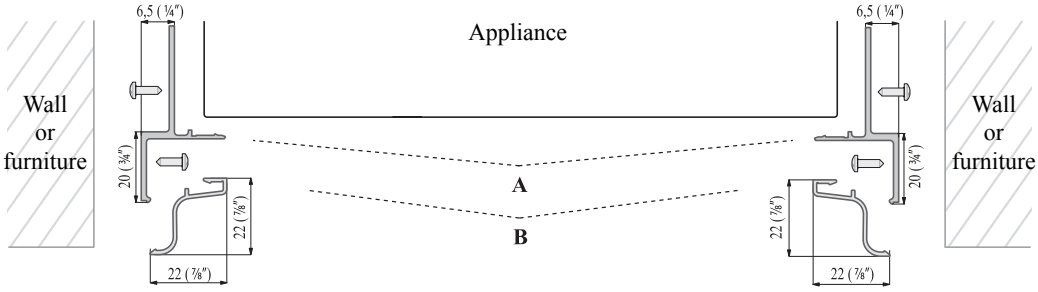

A Connecting element

B Alluminium frame

Installation

Built-in installation two or more appliances

Required accessories to be ordered separately:
- Central connection Kit

Special side profiles and aluminum covering frames are provided for closing gaps between the appliance and the adjacent cabinets.

Operate as follows:

- Position the appliances in front of the installation area, leaving enugh space to operate at their back **1**.

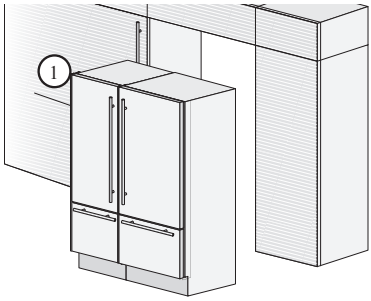

- Move at the back of the appliances to mount the joining brackets: fix on side of the top and lower brackets to one of the appliances and subsequently to the other **2**.

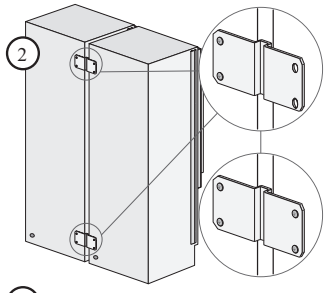

- Place the two units side by side and join them at the front attaching the two profiles with the supplied screws **3**.
  Attach the bracket on top of the units as per figure **4.**

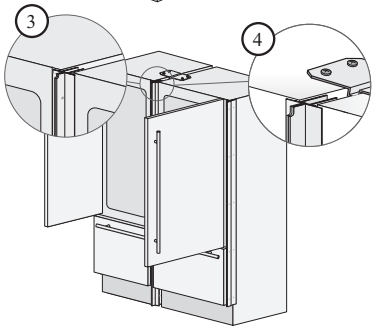

- Finish off by mounting the central cover frame onto the central profiles, by pushing it until a click is heard **5**.

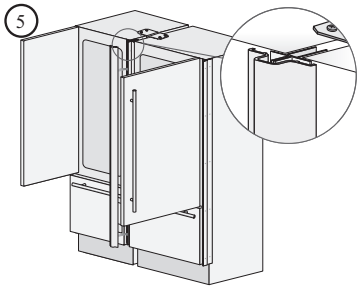

Installation

- Once completed the previous steps, push the units in their final position **6**.
  If the units are to be installed inside a niche or within an enclosed structure, it is necessary to design a ventilation shaft at the back of the niche to assure proper ventilation at the back of the unit. A 5 mm gap is sufficient to prevent overheating. Always mount front panels on door and drawer before pushing the unit into its final position inside the niche or structure.

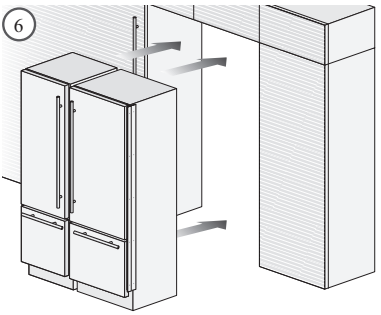

- Check the levelling of the appliance, adjusting its feet and wheels to correct it.

- Secure the appliance to the adjacent cabinets by fixing to these the side profiles previously mounted on the appliance **7**.
  To make this operation easier keep the door and the drawer open.

- Mount the covering frames onto the profiles, first insert them laterally and then push firmly until a "click" is heard **8**.

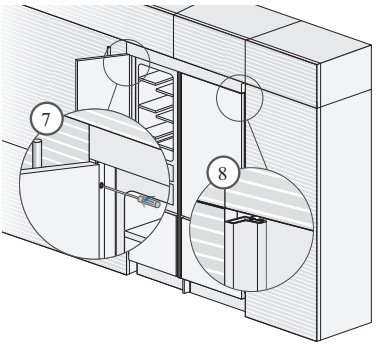

Side and central profiles mounting

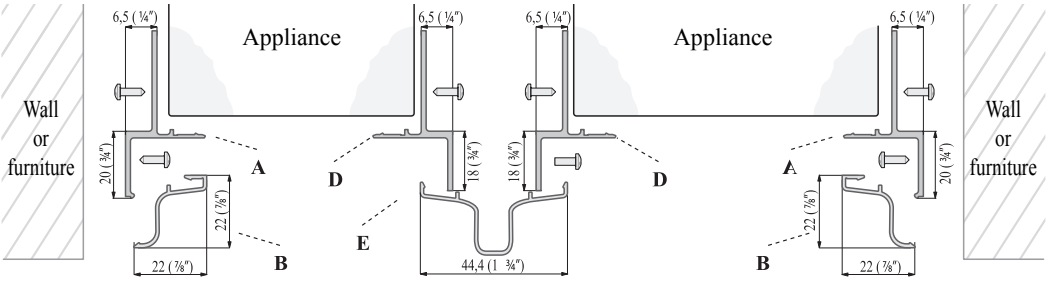

A Connecting element
B Alluminium frame
D Connecting element
E Aluminium frame

Installation

Free-standing installation two or more appliances

Required accessories to be ordered separately:
- Central Connection Kit
- Freestanding Kit

Aluminium profiles can be used to close the spaces between the appliance and adjacent structures.

Operate as follows:

- Position the appliances in front of the installation area, leaving enough space to operate at their back.

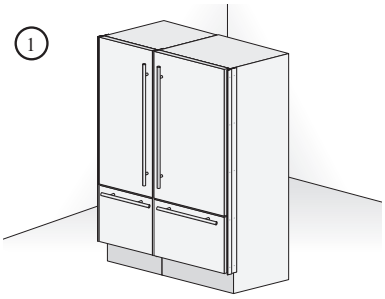

- Peel off the self adhesive protection and apply the insulated anticondensation panel to the side of one appliance **1**.

- Move at the back of the appliances to mount the joining brackets:
  fix one side of the top and lower brackets to one of the appliances and subsequently to the other **2**.

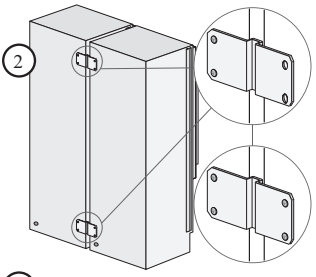

- Place the two units side by side and join them at the front attaching the two profiles with the supplied screws **3**.
  Attach the bracket on top of the units as per figure **4**.

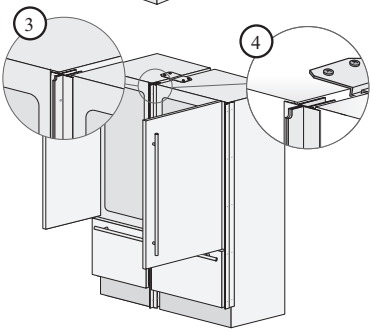

- Finish off by mounting the central cover frame onto the central profiles, by pushing it until a click is heard **5**.

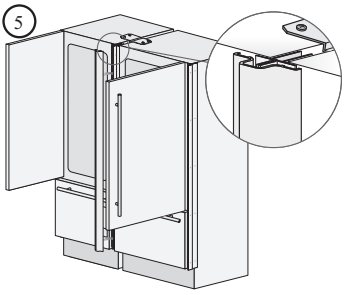

Installation

- Attach the side panels to the unit, mounting them on the side profiles **7** pre-mounted on the unit.

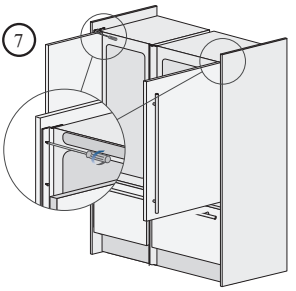

- Attach the aluminum cover **8** to each side profile, pressing onto them until they ‘click’ together.

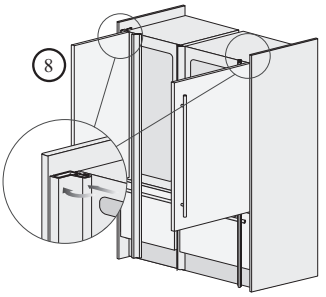

- Mount the top panel **9** on top of the unit, using the screws provided with the kit.
- Adjust the height of the unit with the leveling feet and the back wheels.

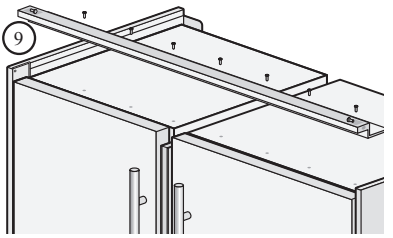

Side panels and central profile mounting

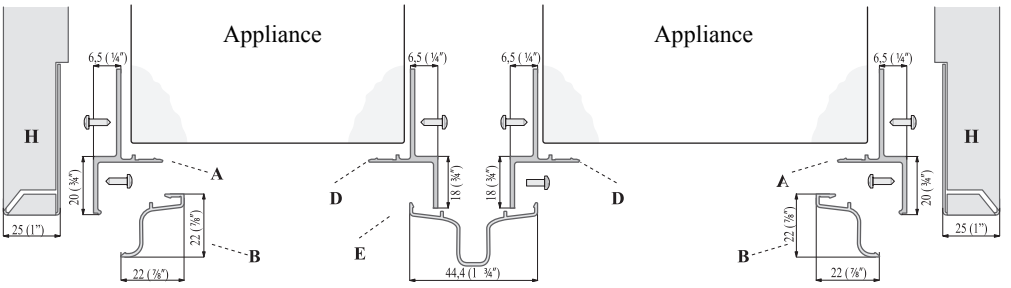

A Connecting element
B Alluminium frame
D Central Connection
E Central covering and connection system
H Side panel

Anti-tipping safety assembly

To prevent the appliance from tipping over an extra-long kit is vailable up on request if the appliance needs to remain distanced from the wall, it is mandatory to install two brackets on the upper part of the appliance for fixing it securely to the wall.

Operate as follows:

- The brackets should be applied as illustrated using the provided screws and expansion plugs.
  Place a bracket on the top of the appliance in correspondence to the fixing holes and against the wall **1**.

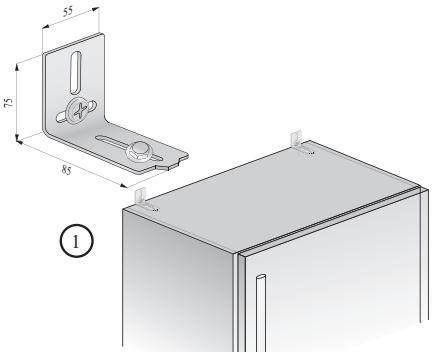

- Mark up the holes position on the wall **2**.

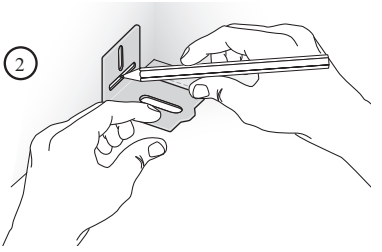

- Drill the wall with an 8 mm (3/8” in) bit and insert the expansion plug **3**.

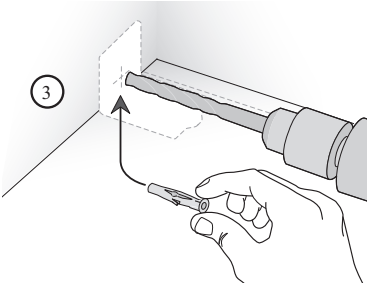

- Reposition the bracket and fix it first to the cabinet and then to the wall **4**.

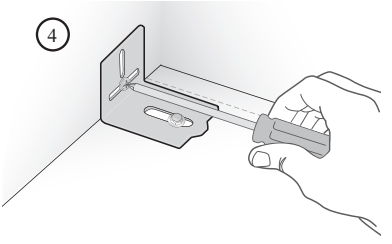

⚠ **To avoid danger of the appliance tipping over it is mandatory to secure the appliance to the wall by means of two special brackets.**

Ventilation

A forced air system assures ventilation through a grille positioned in the lower front part of the unit. If the kitchen design includes a kickplate, the latter has to be punched in order to maintain a satisfactory air flow, as described in the drawing. Holes can be in any shape and size, as long as the total area of the punched part equals 50% of the kickplate are.

In this case, to guarantee a better air flow, it is advisable to remove the front grille included with the unit. The grille is secured to the unit with magnetic plates and can be easily removed even by the end user, to provide for regular cleaning procedures and remove dust.

If the grille is partially covered by the kitchen kickplate, it is advisable to remove the grille in order to provide for a better airflow.

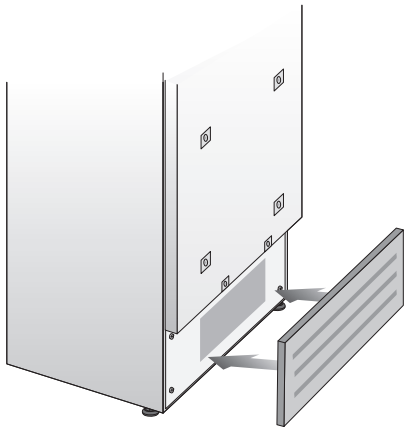

	90cm	**75cm**	**60cm**
A	860 (33 7⁄8”)	740 (29 1⁄8”)	560 (22”)
B	> 100 (4”)		
C	10 (3⁄8”)		
	50%		

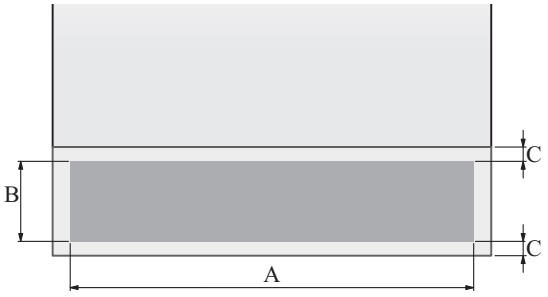

Post installation control

- Check that the front levelling feet have been properly installed.
- Check that the connection to the water system does not have any leaks and that the closing tap is easily accessible.
- Check that the electrical connection is correctly installed and that the multipole switch and socket are easily accessible.
- Check the perfect alignment of the appliance with adjacent structures.
- Check that all adhesive tape and external or internal temporary protective devices have been removed.
- Check the perfect closing of the doors and the smooth sliding of the drawers and shelves.

Start up

- To start the appliance, connect the plug to the electrical mains: at this point, when opening the door, the control panel will usually visualize the message “Stand by”, and all the panel keys be off.
- To turn on all the appliance compartments, press the Unit ⏻ button for three seconds. The display will show the message “Initial test” for approx. 2 minutes. After this phase the compressors will start up and remain on until the default temperature set up in the factory is reached. Do bear in mind that this condition could last several hours.
  If the appliance is provided with an Ice Maker, prior to switch it on make sure that the water filter cartridge is installed, then fill the water system. To this purpose switch off the Ice Maker. Touch the Enter ✓ and Ice Maker ❄ buttons at the same time, to start the filling which may last a few minutes.
  At the end switch the Ice Maker on again by touching the ❄ button.
- For further information about the appliance operation, refer to the User Manual.

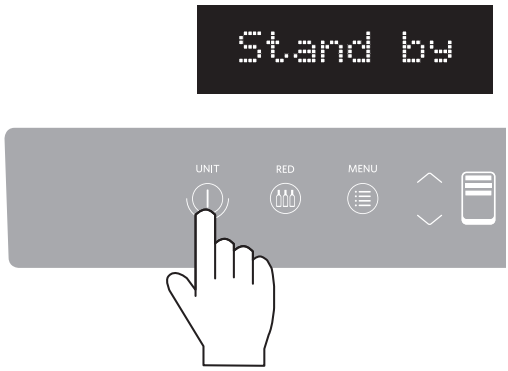

ⓘ **If at the first start - up the message Stand by does not appear, but other messages appear, such as Fridge too warm, Fresco too warm, Freezer too warm, or sound signals are activated, it means, it means that the appliance has already started the cooling process.**
If this is the case, deactivate any possible acoustic signals by pressing the Alarm button, close the door and wait until the set temperature is reached.

⚠ **It is necessary to let the unit reach the correct temperature before foods are stored inside.**



FOR THE WAY IT'S MADE.

Printed in Italy
Q 09/16

400011025861