GB

LU

Instructions for use

KitchenAid

These instruction shall be available on website www.kitchenaid.eu

Product description and symbols 4

Using the burners 4

Practical advice on using the hob 5

Positioning the pan supports and wok support 5

Hood and cabinetry clearances (mm) 6

Injectors table 6

Warnings and suggestions 7

Safeguarding the environment 8

EC Declaration of conformity 8

Installation 9

Gas connection 9

Electrical connection 10

Installation 10

Adaption to a different type of gas supply 11

Replacing the injectors 11

Injectors replacement in the wok burner 12

Regulating the minimum flow level of the gas taps 12

Care and maintenance 13

Care and maintenance of the gas burners 13

Troubleshooting guide 14

After Sales Service 14

Product description and symbols

1. Removable pan supports
2. Auxiliary burner
3. Semi-rapid burner
4. Semi-rapid burner
5. Rapid burner
6. Professional wok burner
7. Auxiliary burner control knob
8. Rapid burner control knob
9. Semi-rapid burner control knob
10. Semi-rapid burner control knob
11. Professional wok burner control knob

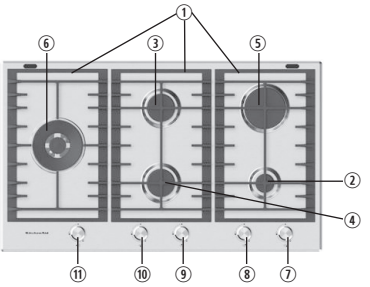

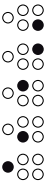

Control Symbols

Standard burners

- Off
- Maximum flame
- Minimum flame

Professional burner

- Off
- Maximum flame outer ring/maximum flame inner ring
- Minimum flame outer ring/maximum flame inner ring
- Maximum flame inner ring/turned off outer ring
- Minimum flame inner ring/turned off outer ring

Using the burners

To turn on one of the burners:

1. Turn the corresponding control knob anticlockwise until the indicator coincides with the maximum flame symbol .
2. Press the control knob to ignite the burner.
3. Once the burner has lit, keep the control knob pressed for about 5 seconds to allow the safety thermocouple fitted to each burner to engage. The thermocouple will switch off the gas supply to the burner should the flame be accidentally lost (A gust of air, momentary interruption of gas supply or liquid spillage etc).

To turn on the professional burner:

1. To simultaneously turn on both rings, turn the knob anticlockwise to position it on the symbol showing maximum flame for outer and inner ring and push down the knob to ignite the burner.
2. To keep only the inner ring ignited push down the knob and turn it anticlockwise to position showing maximum flame for inner ring and turned off for outer.

If the burner does not ignite within about 15 seconds, switch off the burner, check the fitting of the burner cap and plate for correct fitting. Wait at least 1 minute before trying again.

If the burner goes out when the control knob is released, the thermocouple did not engage. wait al least 1 minute before repeating steps 1 to 3.

Practical advice on using the hob

Read the instructions to get the best out of your hob.

- Use pans with a similar diameter to the burner (see the table on this page)
- Use flat bottomed pans except with the wok support.
- Do not use excessive water when cooking foods and use the lid.
- Ensure that pans are fully supported by the pan supports and do not protude over the edges.

You should never use:

- Cast iron pots and pans, statite stone grills or terracotta dishes on the hob as this may damage the pan supports.
- Convectors such as metal netting, or others.
- The use of two burners simultaneously with just one container such as a fish kettle.

Important:
Do not rest or drag the pan supports upside down on the hob as this could scratch it.
Failure to comply with these recommendations could lead to the glass ceramic hob being damaged, or broken and the safety of your appliance being compromised.

Burner	**Ø Pans**
wok	from 24 to 30 cm
rapid	from 24 to 26 cm
semi rapid	from 16 to 22 cm
auxiliary	from 8 to 14 cm

Positioning the pan supports and wok support

Position the pan supports by inserting the rubber feets located on the bottom of supports into the slots found on the surface of the metal top.

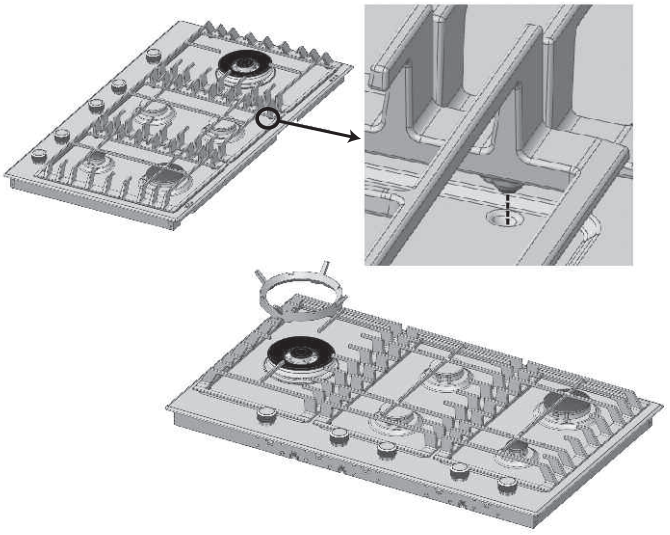

Hood and cabinetry clearances (mm)

If a hood is to be installed above the hob, refer to the hood installation instructions to ensure the correct height above the hob

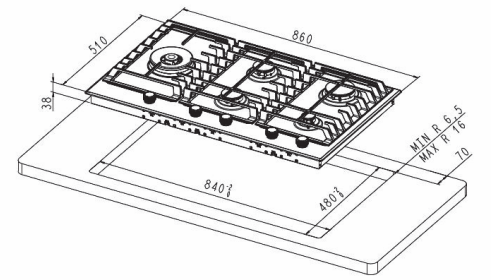

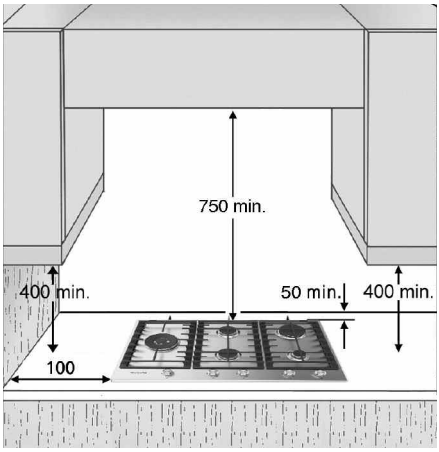

Injectors table

Category I2E

Type of gas used	Type of burner	Injector marketing	Nominal heat flow kW	Rated consumption	Reduced heat capacity kW	Gas pressure mbar		
						min.	rat.	max.
NATURAL GAS (Methane) **G20**	2 ring (outer + inner)	165H1+70H1	5,80	552 l/h	2,20	17	20	25
	Inner	70H1	0,90	86 l/h	0,30			
	rapid	125A	3,00	286 l/h	0,60			
	semi-rapid	97A	1,75	167 l/h	0,35			
	auxiliary	78C	1,00	95 l/h	0,30			

Type of gas used	Model configuration 5 burners 2C 5,8kW	Rated thermal flow rate kW	Total rated consumption	Air required (m^3) for burning 1 m^3 of gas
G20 20 mbar	2C-1R-2SR -1AUX	13,3	1267 l/h	9,52

Refer to the injector table of your Country

Electric supply:220-240 V ~ 50/60 Hz 0,6W

Warnings and suggestions

To get the most out of your hob, please read the instructions carefully and keep them for future consultation.

- These instructions are only valid in the countries whose destination symbol is shown on the serial number plate on the hob.
- The packing (plastic bags, expanded polyurethane, etc) pose a potential threat to children and should be disposed of carefully.
- **Check the appliance has not been damaged during transportation and remove all protective packing and films before installation.**
- **This hob (cat. 3) was designed to be used exclusively for cooking food in household surroundings. Any other use (for example heating rooms) should be regarded as improper and dangerous.**
- **The installation and connection of this appliance to a gas or electrical supply must be carried out by a competant, qualified person in compliance with current legislation.**
- **This appliance should be installed in compliance with standards in force and only used in well ventilated rooms. Read the instructions before installing and using this appliance.**
- **The pre-fitted gas connector and it's supply pressure are shown on the label attached to the bottom of the hob. If this type of gas supply is not being used, please refer to the section called Adaption to different types of gas supply on page 11.**

Note:

- Incorrect placement of the pans supports can scratch the hob. To avoid this always ensure that the rubber feet on the bottom of the pan supports are the only part of the pan supports that touch the hob and do not drag the pan supports accross the hob surface.
- On the glass surface do not use:
  - Cast iron grills, terracotta pots or pans.
  - Heat convectors (e.g. metal netting).
  - Using two burners to cook 1 pan.
- In the event of prolonged usage, additional ventilation may be required (opening a window or increasing the extration speed of the hood).

Warning

- Keep children away from the hob when in use and don't let them play with the control knobs or any other part of the appliance.
- This appliance is not intended for use by persons (including children) with reduced physical, sensor or mental capabilities or lack of experience and knowledge unless they have been given initial supervision or instruction concerning use of the applaince by a person responsible for their safety.
- Do not let children play with the pan supports. The rubber feet on the underneath of the pan supports could be swallowed by small and cause serious injury or suffocation.
- Before replacing the pan supports on the hob, please check that all the rubber feet are in place.
- Each time you finish using the hob, always check that the control buttons are in the off position and shut off the tap to the gas mains or cylinder.
- Do not obstruct the air vents at the back of the appliance in any way.

Safeguarding the environment

Packing
The packing material is 100% recyclable and is labelled with the recycling symbol ♺. Please dispose of all packing responsibly and carefully.

Product
This appliance is marked according to the European Directive 2012/19/EU, Waste Electrical and Electronic Equipment (WEEE).
By ensuring that this product is disposed of correctly, you will help prevent potentially negative consequences for the environment and human health. The symbol  on the product, or on the documents accompanying this appliance indicates that this product should not be disposed of as household waste. Please dispose of this appliance at an Electrical & Electronic Equipment Collection point as in accordance with local environmental regulations for waste disposal. For details of your local Collection Point please contact your Local Authority.

EC Declaration of conformity

This appliance has been designed, constructed and marketed in compliance with:
- safety requirements of "GAS" Directive 2009/142/EC (ex-90/396/EEC);
- safety objectives of "Low Voltage" Directive 2006/95/EC (which replaces 73/23/EEC and subsequent amendments);
- protection requirements of "EMC" Directive 2004/108/EC.

This appliance meets the eco design requirements of European regulation N. 66/2014, in conformity to the European standard EN 30-2-1.

Installation

Technical information for the installer

- This appliance can be built into a 20mm to 40mm thick worktop.
- If no oven is to be installed below the hob, a panel must be fitted under the hob to prevent hob damage and protect the cupboard contents. This panel must cover the whole of the underside of the hob and must be positioned so that an air gap of at least 20mm between the panel and hob underside is maintained, as a minimum, and as a maximum 150mm to the underneath of the work surface.
- This hob is designed to operate perfectly with any oven in the KitchenAid range. The Manufacturer declines all responsibility should any other make of oven be installed.
  The manufacturer declines all responsibility should another make of oven be installed.

Before installation, please ensure that:

- **Warning: this is a heavy products which requires the installation to be carried out by two people.**
- The gas supply (type and pressure) and the calibration on the hob are compatable (see serial number plate on the hob and the table on page 6).
- The cabinetry and appliances surrounding/next to the hob rea heat resistant and in compliance with local regulations.
- The products of combustion are removed from the atmoshere in the room by using an extraction hood or electrical fan installed to the walls and or windows, in line with current regulations.
- The air circulates naturally through a suitable opening that is no less than 100cm^2 in cross section, which must be:
  - perminent and accessable on the walls of the room being ventilated and extracting towards the outside.
  - created in such a way that the openings both inside and out cannot be obstructed, even in error.
  - Protected by plastic grill, metallic netting etc that should not reduce the 100cm^2 cross section
  - Located in such a position so as not to interfere with the extraction of the products of combustion.

Gas connection

WARNING! This operation must be performed by a qualified technician.

- The gas supply system must comply with local regulations.
- You can find specific local regulations for some countries in the paragraph “Reference to local regulations”. If not information concerning your Country is given, please ask details to your installer.
- The connection of the hob to the gas pipe network or gas cylinder must be made by means of a grid copper or steel pipe with fittings complying with local regulations, or by means of a continuous-surface stainless steel hose complying with local regulations. The maximum length of the hose is 2 linear metres.
- Connect elbow (**A**)* or (**B**)* supplied with to the hob inlet main pipe and interpose the washer (**C**) supplied, in compliance with EN 549.

* Use elbow (**A**) for France and elbow (**B**) for all other destinations.

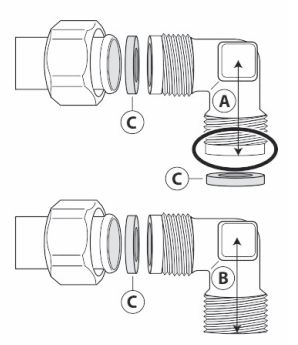

IMPORTANT: if a stainless steel hose is used, it must be installed so as not to touch any mobile part of the furniture. It must pass through an area where there are no obstructions and where it is possible to inspect it on all its length.

- After connection to teh gas supply, check for leaks with soapy water. Light up the burners and turn the knobs from max position to minumum position to check flame stability.

Electrical connection

The electrical connections must comply with current legislation and be carried out by a qualified, competent person.

- Information on the voltage and power absorbed are shown on the serial no. plate.
- **The appliance must be earthed.**
- **When installing the appliance, we recommend that this hob is protected by a 3mm bi-polar switch.**
- **If damaged, the power cable must be replaced with an identical type of powercable (H05V2V2-FT90 °C, or H05RR-F type). We recommend that this operation be conducted by our After Sales Service. Please contact our Customer Care Centre on 00800-3810-4026.**
- **Do not use extension cables.**
- **The manufacturer declines all responsibility for damage to persons, pets or goods as a result of failure to comply with the regulations above.**

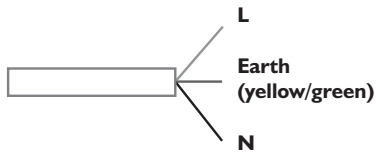

Installation

1. After cleaning the surfaces around the edges, fit the seal provided.
2. Position the hob inside the cut-out obeying all the hood and cabinetry clearances on page 6.
3. Use the fixing pieces **(A)** provided, to secure the hob to the worksurface, with screws.

Note: the electrical power cable must be long enough to allow the hob to be lifted out from above.

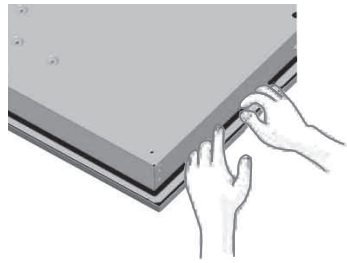

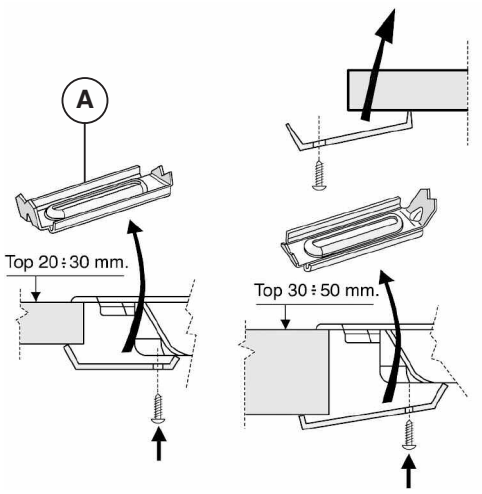

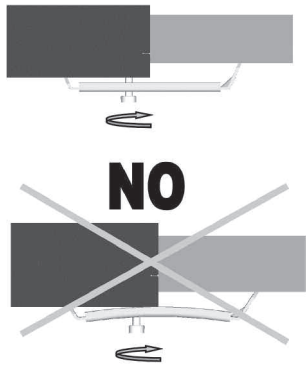

Adaption to a different type of gas supply

If you are using a different kind of gas from the one indicated on the serial no. plate and the orange label on the back of the hob, you must replace the injectors; in the case of the Wok burner, adjust the primary air (see Injector table on page 6).
The orange label should be removed and kept together with the manual.
Use pressure regulators suitable for the gas pressures indicated on page 6

- In order to replace the injectors, contact the Customer Care Centre on 00800-3810-4026, or a qualified electrician.
- Injectors not supplied as standard should be requested from the Customer Care Centre on 00800-3810-4026.
- Regulate the minimum levels of the taps.

Note: with liquid petroleum gas (G30/G31) the bypass screw must be screwed in fully. If you then experiance difficulty in turning the control knob, contact our After sales Service though our Customer Care Centre on 00800-3810-4026, who will arrange for a replacement after ascertaining that the tap is damaged.

Replacing the injectors

Note: Refer to the table on page 6 to ensure the correct type of injector is to be fitted.

Traditional burners (T)

1. Remove the cap (**A**).
2. Remove the spreader (**B**).
3. Unscrew the injector (**C**) with a box spanner 7.
4. Replace the injector with the one for the new gas.
5. Put back burners and pan supports.

Note: Before installing the hob, please remember to stick the gas calibtration label, provided with the replacement injectors over the gas information on the underside of the hob.

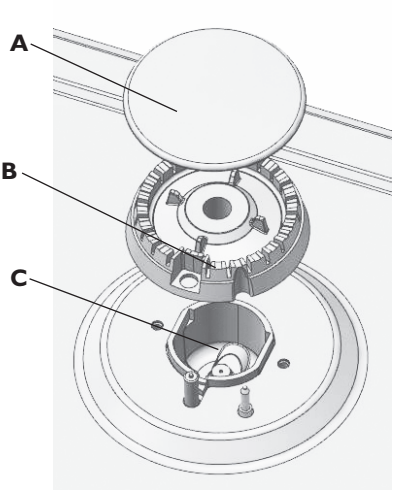

Injectors replacement in the wok burner

To replace the injectors in special burner it is necessary to:

1. Remove spreader (**C**), the screws (**B**) holding the cover cap (**A**) and the cap itself.
2. Unscrew the inner injector (**D**) and the outer injector (**E**) with a box spanner 7.
3. Replace the injectors.
4. Put back the cover cap, screws and spreader.

Note: make sure that:

1. After replacement the spreader (**C**) is inserted correctly on the burner.

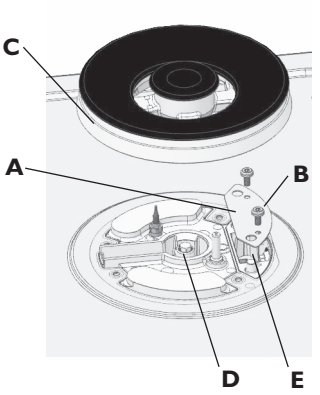

Regulating the minimum flow level of the gas taps

Regulating the minimum flow level must be done with the tap at the lowest position (small flame) .
There is no need to regulate the primary air in the burners.
To ensure the minimum level is properly regulated, remove the control knob and adjust the screws found on the tap as follows:

1. tighten to reduce the height of the flame I (-)
2. slacken to increase the height of the flame (+);
3. With the burners on, rotate the buttons from the maximum to the minimum position to check the stability of the flame.

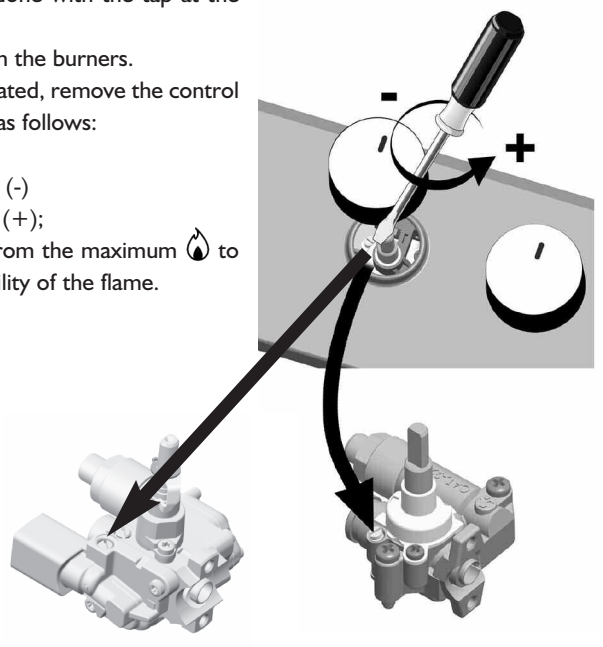

Care and maintenance

Before any cleaning and/or maintenance operation, disconnect the hob from power supply and wait until it is cold.
To keep the hob in perfect condition, remove any food residuals and clean it after every use.

Hob cleaning:
- Clean the surfaces of the hob with lukewarm water and/or neutral detergent, rinse and dry thoroughly with a soft cloth or shammy leather.
- Prolonged contact with hard water or aggressive detergents could corrode or stain the stainless steel surfaces; detergents containing chlorine and/or chlorine composites, ammoniac or that are highly acidic will cause irreparable damage to the hob. Before any kind of use, we advise you read the product label to check if a product is suitable.
- Do allow acid or alkaline substances, such as vinegar, mustard, salt or lemon juice to come into contact with the hob for extended periods.
- It is advisable to immediately wipe any spills (water, sauce, coffee, etc.).
- Do not use abrasive products and pan scourers.
- Do not use steam cleaners.
- Do not use flammable products.
- All enamelled and glass parts should be cleaned with warm water and/or a neutral detergent.

Care and maintenance of the gas burners

The pan supports and burners can be removed to make cleaning easier.

1. Hand wash carefully in hot water with a mild detergent making sure that all the ingrained dirt is removed and the openings on the burner are not blocked. The internal burner cap (**D**), on page 12 is made of brass and is subject to a natural burnishing when it heats up. Clean it each time you use it with a product specifically designed for brass. Use hot water and a mild deteregent to clean the the wok burner external cap (item (**C**) on page 12). Never use harsh products, or scourers that will damage the special surface coverings.
2. Rinse and dry carefully.
3. Correctly refit the burners and caps in their place.
4. Make sure that when replacing the pan supports, the pan support is located correctly for each burner.

Note: Hobs fitted with electronic ignition and thermocouples must have the ends of the igniters and thermocouples cleaned regularly and frequently in order to operate. Please clean them very carefully with a damp cloth. Any remaining ingrained food should be removed carefully with a toothpick, or similar.

To avoid damaging the electronic ignition only operate with the burners and pan supports correctly in place.

Troubleshooting guide

If the hob is not working properly work through the this guide before contacting our Customer Care Centre.

The burner does not ignite, or the flame is unsteady? Check that:

1. the gas, or electricity supply has not been interrupted and that the control knob is turned fully on.
2. the gas supply has not run out.
3. the openings on the burner have become blocked.
4. the end of the electronic igniter is clean.
5. all the parts on the burner are properly positioned.

The flame doesn't stay on? Check that:

1. the button was pushed in properly when turning on the burner for the time required to activate the safety thermocouple.
2. the burner's openings are not blocked in relation to the thermocouple.
3. the end part of the thermocouple is clean.

The pans are not stable? Check that:

1. the bottom of the pot is perfectly flat.
2. the pot is centred on the burner.
3. the pan supports are correctly positioned with all the rubber feet in place.

If, despite all these checks and after tuning the hon off and on again, you are still experiancing problems please contact our Customer Care Centre on 00800-3810-4026.

After Sales Service

Before contacting our Customer Care Centre please check to see if the problem can be fixed by refering to the troubleshooting guide.

1. If the fault persists contact us on 00800-3810-4026. We will ask you for some information, it will help us, help you if you have the following information ready to give us:

- a short description of the falut
- the serial number and model number of the appliance
- the service number (the number after the word service on the rating plate on the bottom of the hob. The service number can also be found in the warranty booklet.
- your name, full address including postcode and telephone number.

Note: If there is a problem with your hob, failure to contact us could seriously compromise the safety and quality of this appliance.

SERVICE 0000 000 00000



FOR THE WAY IT'S MADE.

Whirlpool Europe S.r.l. Socio Unico
Viale G. Borghi, 27 - 21025 Comerio (VA)
Phone 0332.759111 - Fax 0332.759268
www.whirlpool.eu

Printed in Italy
03/15

400010852250