GB

IT

Instructions for use

KitchenAid

These instructions are also available at: docs.kitchenaid.eu

Product description and symbols	**4**
Control symbols	**4**
Using the burners	**4**
Practical advice on using the hob	**5**
Positioning the pan supports and wok support	**5**
Clearance between the hob and a hood or cabinets (mm)	**6**
Injectors table	**6**
Precautions and suggestions	**7**
Safeguarding the environment	**8**
Eco Design Declaration	**8**
Installation	**9**
Gas connection	**9**
Electrical connection	**10**
Installation	**10**
Conversion to a different type of gas supply	**11**
Replacing the injectors	**11**
Replacing the injectors in the wok burner	**12**
Regulating the minimum flow level of the gas taps	**12**
Cleaning and maintenance	**13**
Cleaning and maintaining the gas burners	**13**
Troubleshooting guide	**14**
After-sales Service	**14**

Product description and symbols

1. Removable pan supports
2. Auxiliary burner
3. Semi-rapid burner
4. Rapid burner
5. Semi-rapid burner
6. Professional wok burner
7. Auxiliary burner control knob
8. Semi-rapid burner control knob
9. Professional wok burner control knob
10. Rapid burner control knob
11. Semi-rapid burner control knob

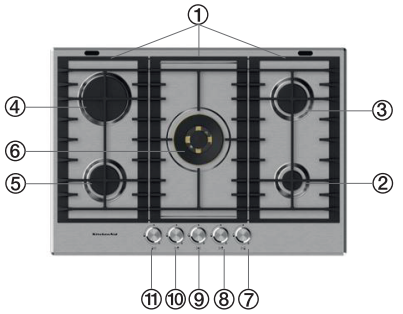

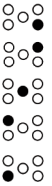

Control symbols

Standard burners

- OFF
- Maximum flame
- Minimum flame

Professional burners

- OFF
- Outer ring maximum flame/inner ring maximum flame
- Outer ring minimum flame/inner ring maximum flame
- Inner ring maximum flame/outer ring switched off
- Inner ring minimum flame/outer ring switched off

Using the burners

To switch on one of the burners:

1. Turn the relevant control knob anticlockwise until the indicator is at the maximum flame symbol .
2. Press the control knob to ignite the burner.
3. Once the burner has lit, hold the control knob down for approx. 5 seconds to allow the safety thermocouple fitted to the burner to engage. The thermocouple will cut off the gas supply to the burner if the flame goes out accidentally (e.g. due to a gust of air, momentary interruption of the gas supply or liquid spillage).

To switch on the professional burner:

1. To switch on both rings at the same time, turn the control knob anticlockwise to the outer ring/inner ring maximum flame symbol, then press the control knob to ignite the burner.
2. To keep only the inner ring lit, press the control knob and turn it anticlockwise to the inner ring maximum flame/outer flame switched off symbol.

If the burner does not ignite within approx. 15 seconds, switch off the burner and check that the burner cap and plate are fitted correctly. Wait at least 1 minute before trying again.

If the burner goes out when you release the control knob, this means that the thermocouple did not engage. Wait at least 1 minute before repeating steps 1 to 3.

Practical advice on using the hob

Read these instructions to get the best out of your hob.

- Use pans with a similar diameter to the burner (see the table on this page)
- Use flat-bottomed pans unless using the wok support.
- Do not use an excessive quantity of water when cooking and always put the lid on the saucepan.
- Make sure that pans are fully supported by the pan supports and do not protrude over the edges.

You should never use:

- Cast iron pots and pans, soapstone griddles or terracotta dishes, as these may damage the pan supports.
- Metal grids or other items that convect heat.
- Two burners at the same time with just one item of cookware on top, e.g. a fish kettle.

Important:
Do not place the pan supports upside down on the hob or drag them across its surface as this may scratch it.
Failure to observe these recommendations could result in the glass on your ceramic hob being damaged or broken and the safety of your appliance being compromised.

Burner	Pan diameter
Wok	24 to 30 cm
Rapid	24 to 26 cm
Semi-rapid	16 to 22 cm
Auxiliary	8 to 14 cm

Positioning the pan supports and wok support

Position the pan supports by inserting the rubber feet on the bottom of the supports into the recesses on the surface of the metal top.

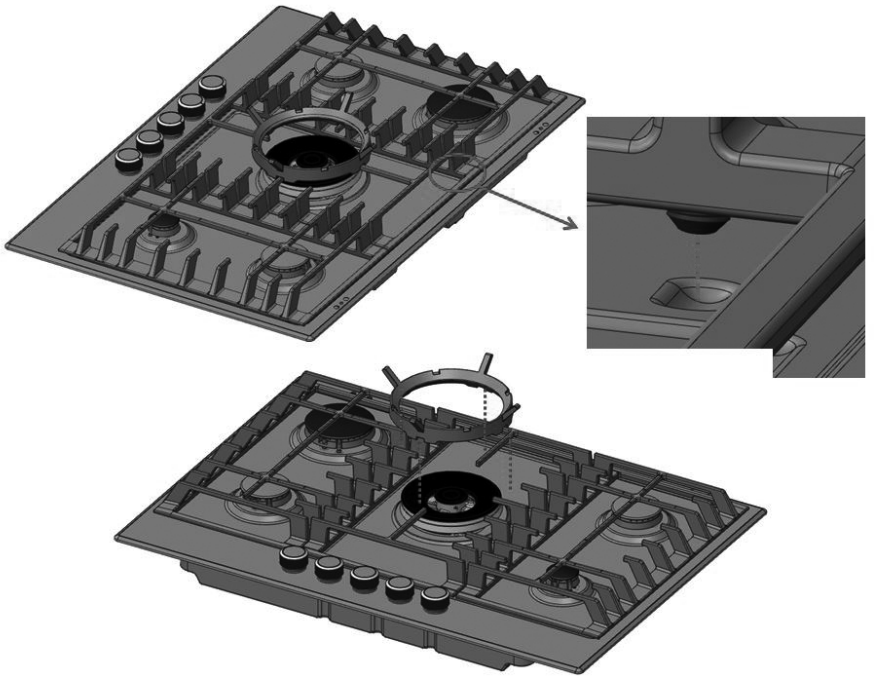

Clearance between the hob and a hood or cabinets (mm)

If a hood will be installed over the hob, refer to the hood installation instructions to ensure that the correct clearance above the hob is maintained.

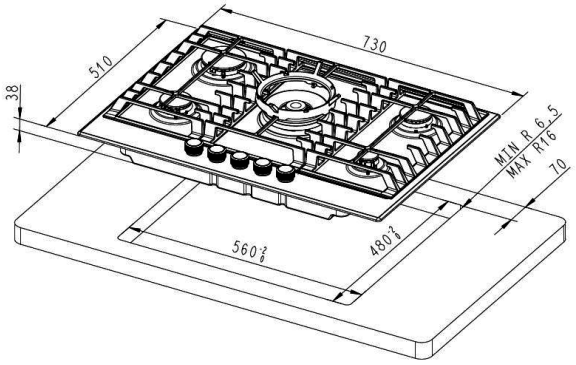

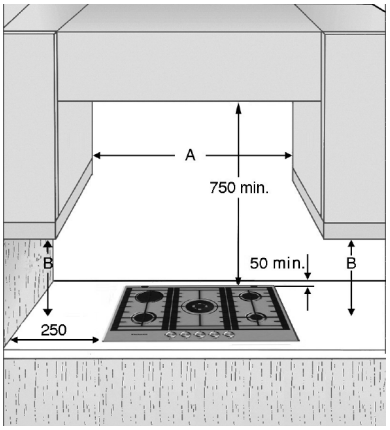

Note: If the distance "A" between the wall cupboards is between 600 mm and 730 mm, the height "B" must be at least 530 mm. If the distance "A" between the wall cupboards is greater than the width of the hob, the height "B" must be at least 400 mm.

Injectors table

Category II2H3+

Type of gas	Type of burner	Injector designation	Nominal heat flow (kW)	Rated consumption	Reduced heat capacity (kW)	Gas pressure (mbar)		
						min.	rat.	max.
NATURAL GAS (Methane) **G20**	Two-ring	149H3	4.00	381 l/h	2.20	17	20	25
	Rapid	125A	3.00	286 l/h	0.60			
	Semi-rapid	97A	1.75	167 l/h	0.35			
	Auxiliary	78C	1.00	95 l/h	0.30			
LIQUEFIED GAS (Butane) **G30**	Two-ring	100	4.00	291 g/h	1.90	20	28-30	35
	Rapid	85A	3.00	218 g/h	0.60			
	Semi-rapid	66A	1.75	127 g/h	0.35			
	Auxiliary	50A	1.00	73 g/h	0.30			
LIQUEFIED GAS (Propane) **G31**	Two-ring	100	4.00	286 g/h	1.90	25	37	45
	Rapid	85A	3.00	214 g/h	0.60			
	Semi-rapid	66A	1.75	125 g/h	0.35			
	Auxiliary	50A	1.00	71 g/h	0.30			

Type of gas	Model configuration 5 burners 2C 4 kW	Rated thermal flow rate (kW)	Total rated consumption	Air required (m^3) for burning 1 m^3 of gas
G20 20 mbar	2C-1R-2SR -1AUX	11.5	1096 l/h	9.52
G30 28-30 mbar	2C-1R-2SR -1AUX	11.5	836 g/h	30.94
G31 37 mbar	2C-1R-2SR -1AUX	11.5	821 g/h	23.8

Refer to the injector table for your country

Electricity supply: 220-240 V ~ 50/60 Hz 0.6 W

Precautions and suggestions

To get the most out of your hob, please read these instructions carefully and keep them for future reference.

- These instructions are only valid in countries the destination symbol for which is shown on the rating plate on the hob.
- Packaging such as plastic bags, expanded polyurethane, etc. poses a potential safety risk to children and should be disposed of carefully.
- **Check that the appliance has not been damaged during transit and remove all protective packaging and film before carrying out installation.**
- **This hob (cat. 3) has been designed exclusively for cooking food in a domestic setting. Any other use (e.g. for heating rooms) should be regarded as improper and dangerous.**
- **This appliance must be installed and connected to a gas or electrical supply by a suitably qualified professional in compliance with current legislation.**
- **This appliance must be installed in compliance with the applicable standards and only used in well-ventilated rooms. Read the instructions before installing and using this appliance.**
- **The pre-fitted gas connector and its supply pressure are shown on the label attached to the bottom of the hob. If this type of gas is not being used, please refer to the section entitled "Conversion to a different type of gas supply" on page 11.**

Note:

- Positioning the pan supports incorrectly may scratch the hob. To prevent this from happening, always make sure that the rubber feet on the bottom of the pan supports are the only part of the pan supports that touch the hob and do not drag the pan supports across the surface of the hob.
- Do not use any of the following on the glass surface:
  - Cast iron griddles or terracotta pots and pans.
  - Items that convect heat (e.g. metal grids).
  - Two burners to heat a single pan.
- Additional ventilation may be required when using the appliance for an extended period (e.g. open a window or increase the speed of the extractor hood).

Warning

- Keep children away from the hob when in use and do not let them play with the control knobs or any other part of the appliance.
- This appliance is not intended for use by persons (including children) with reduced physical, sensory or mental capacities or those who are unfamiliar with how to use it unless they have been given initial supervision or instructions on using the appliance by a person responsible for their safety.
- Do not let children play with the pan supports. The rubber feet underneath the pan supports could be swallowed by small children and cause serious injury or suffocation.
- Check to make sure that all the rubber feet are in place before placing the pan supports on the hob.
- When you have finished using the hob, always check that the control knobs are in the off position and close the tap to the gas supply or cylinder.
- Do not obstruct the air vents on the back of the appliance.

Safeguarding the environment

Packaging
The packaging materials are fully recyclable and marked with the recycling symbol ♺. Please dispose of all packaging responsibly and carefully.

Product
This appliance is marked in compliance with European Directive 2012/19/EU on Waste Electrical and Electronic Equipment (WEEE). By ensuring that this product is disposed of correctly, you will help to prevent any negative consequences for the environment and human health which could otherwise arise. The  symbol on the product or the accompanying documentation indicates that this appliance must not be disposed of as household waste.

Please dispose of this appliance at a WEEE collection point in accordance with local environmental regulations on waste disposal. Please contact your local authority to find out where your nearest collection point is.

Eco Design Declaration

This appliance meets the Ecodesign requirements of European Regulation No. 66/2014 and complies with the European Standard EN 30-2-1.

Installation

Technical information for the installer

- This appliance can be built into a worktop that is 20–40 mm thick.
- If an oven is not being installed below the hob, a panel must be fitted underneath the hob to prevent damage to it and protect the contents of the cupboard. This panel must cover the entire underside of the hob and must be positioned so that it is at least 20 mm away from the underside of the hob and no more than 150 mm away from the underside of the worktop.
- This hob is designed to work perfectly with any oven in the KitchenAid range. The manufacturer cannot be held liable if any other make of oven is installed.
  The manufacturer cannot be held liable if any other make of oven is installed.

Before installing the appliance, please ensure that:

- **Warning: This is a heavy product and we therefore recommend that it is installed by two people.**
- The gas supply (type and pressure) and hob calibration are compatible (see rating plate on hob and table on page 6).
- The cabinets and appliances in the vicinity of the hob are heat resistant and comply with local regulations.
- Combustion fumes are removed from the air in the room by an extractor hood or an electric fan installed on a wall and/or windows in accordance with current regulations.
- Air can circulate naturally through a suitable opening that is no less than 100 cm^2 in cross section. This must:
  - Be permanent and accessible on a wall of the room being ventilated; it must draw air outside.
  - Be created in such a way that it cannot be accidentally obstructed either from the inside or the outside.
  - Be protected by plastic grille or metal grid, etc. that does not reduce the 100 cm^2 cross section.
  - Be located in a place that does not interfere with the extraction of combustion fumes.

Gas connection

WARNING: This work must be performed by a qualified technician.

- The gas supply system must comply with local regulations.
- You can find specific local regulations for some countries in the section entitled "Reference to local regulations". If no information about your country is provided, please ask your installer for details.
- The hob must be connected to the gas supply system or gas cylinder either using a rigid, jointed copper or steel pipe that complies with local regulations or using a flexible, seamless stainless-steel pipe that complies with local regulations. The maximum length of the pipe is two linear metres.
- Connect the elbow (**A**)* or (**B**)* provided to the main supply pipe for the hob and fit the washer (**C**) provided in accordance with EN 549.

* Use elbow (**A**) for France and elbow (**B**) for all other countries.

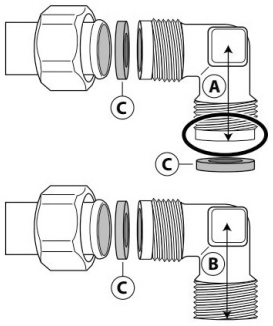

IMPORTANT: If using a stainless-steel pipe, it must be installed in such a way that it cannot touch any moving part of the cabinet. It must pass through an area where there are no obstructions and where it can be inspected across its entire length.

- After connecting the appliance to the gas supply, check for leaks using soapy water. With the burners on, turn the control knobs from the maximum to the minimum position to check the stability of the flame.

Electrical connection

The electrical connections must comply with current legislation and be made by a suitably qualified professional.

- Information on the voltage and power consumed is provided on the rating plate.
- **The appliance must be earthed.**
- **When installing the appliance, we recommend fitting an all-pole disconnection device with contacts that open 3 mm.**
- **If damaged, the power supply cable must be replaced with an identical one (H05V2V2-FT90 °C or H05RR-F). We recommend that you have this work carried out by our After-sales Service. Please contact our Customer Care Centre on 00800-3810-4026.**
- **Do not use extension cables.**
- **The manufacturer cannot be held liable for injuries to persons or pets or for damage to goods caused by failure to comply with the regulations above.**

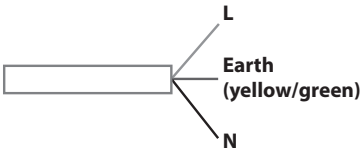

Installation

After cleaning the surface around the edges, fit the seal provided to the hob as shown in the figure.

Position the hob in the worktop opening, using the dimensions indicated in the instructions.
Note: The power supply cable must be long enough to allow the hob to be removed from above.
Use the brackets (A) provided to secure the hob in place. Fit the brackets into the relevant holes indicated by the arrows and screw them down depending on the thickness of the worktop (see following figures).

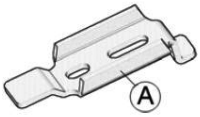

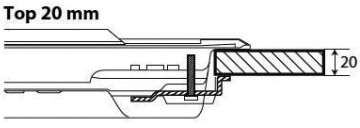

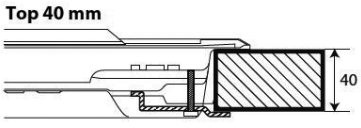

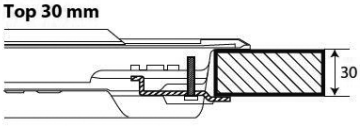

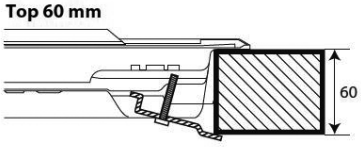

Conversion to a different type of gas supply

If you are using a different type of gas from the one indicated on the rating plate and the orange label on the back of the hob, you will need to replace the injectors and adjust the primary air for the wok burner (see injector table on page 6). The orange label should be removed and kept together with the manual.

Use pressure regulators that are suitable for the gas pressures indicated on page 6

- To replace the injectors, contact our Customer Care Centre on 00800-3810-4026 or a qualified electrician.
- Injectors not supplied as standard must be requested from our Customer Care Centre on 00800-3810-4026.
- Regulate the minimum levels of the taps.

Note: When using liquefied petroleum gas (G30/G31), the bypass screw must be screwed in fully. If you then have difficulty turning the control knobs, contact our After-sales Service though our Customer Care Centre on 00800-3810-4026 – they will arrange for a replacement after ascertaining that the tap is damaged.

Replacing the injectors

Note: Refer to the table on page 6 to ensure that the correct type of injector is fitted.

Traditional burners (T)

1. Remove the cap (**A**).
2. Remove the burner ring (**B**).
3. Unscrew the injector (**C**) using a 7 mm hex key.
4. Replace the injector with one for the new type of gas.
5. Refit the burners and the pan supports.

Note: Before installing the hob, remember to stick the gas calibration label provided with the replacement injectors over the current information on the underside of the hob.

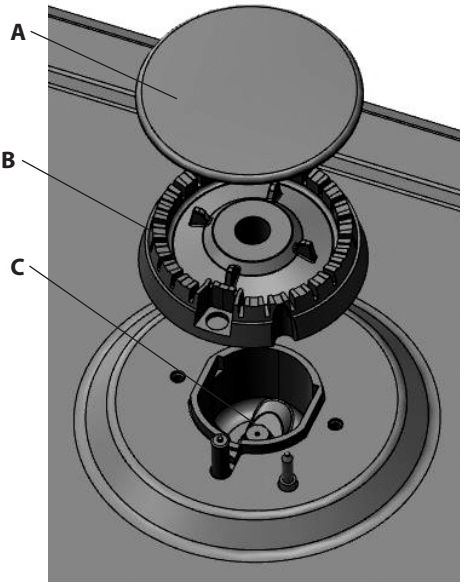

Replacing the injectors in the wok burner

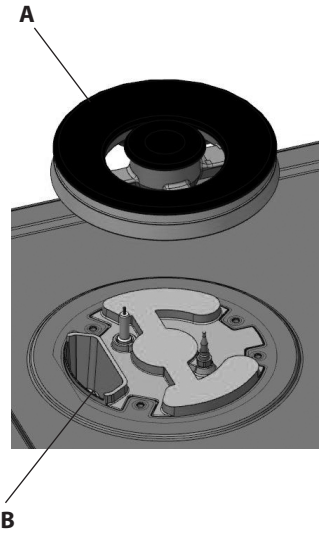

To replace the injectors in the special burner:
1. Remove the burner ring (**A**).
2. Unscrew the injector (**B**) using a 7 mm hex key.
3. Replace the injectors.
4. Refit the burner ring.

Note: Make sure that:
1. The burner ring (**A**) is seated correctly on the burner following replacement.

Regulating the minimum flow level of the gas taps

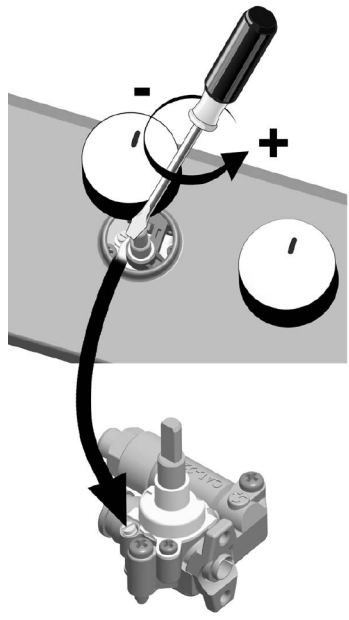

The minimum flow level is regulated using the tap at the lowest position (small flame) .
There is no need to regulate the primary air in the burners.
To ensure the minimum level is properly regulated, remove the control knob and adjust the screws on the tap as follows:

1. Tighten to decrease the height of the flame 1 (-)
2. Loosen to increase the height of the flame (+);
3. With the burners on, turn the control knobs from the maximum to the minimum position to check the stability of the flame.

Cleaning and maintenance

Disconnect the hob from power supply and wait until it is cold before carrying out cleaning and/or maintenance work.
To keep the hob in perfect condition, clean it to remove any food residue after every use.

Cleaning the hob:
- Clean the surfaces of the hob with lukewarm water and/or a neutral detergent, then rinse and dry thoroughly with a soft cloth or chamois leather.
- Prolonged contact with hard water or aggressive detergents could corrode or stain the stainless-steel surfaces. Detergents containing chlorine, chlorine composites or ammonia and detergents with a high acid content will cause irreparable damage to the hob. Please read the product label to make sure that the product is suitable before using it.
- Do allow acidic or alkaline substances, such as vinegar, mustard, salt or lemon juice, to come into contact with the hob for prolonged periods.
- It is advisable to wipe away any spills (water, sauce, coffee, etc.) immediately.
- Do not use abrasive cleaning products and pan scourers.
- Do not use steam cleaners.
- Do not use flammable products.
- All enamelled and glass parts should be cleaned with warm water and/or a neutral detergent.

Cleaning and maintaining the gas burners

The pan supports and burners can be removed to facilitate cleaning.
1. Hand wash carefully in hot water with a mild detergent, making sure that all the ingrained dirt is removed and the openings on the burner are not blocked. The internal burner cap (**D** on page 12) is made of brass and will burnish naturally when it heats up. Clean it after every use with a product specifically designed for brass. Use hot water and a mild detergent to clean the wok burner's external cap (**C** on page 12). Never use abrasive products or scourers as these will damage the special surface coatings.
2. Rinse and dry carefully.
3. Refit the burners and caps in the correct places.
4. When refitting the pan supports, make sure that each pan support is correctly aligned with each burner.

Note: The ends of the electronic spark plugs and thermocouples must be cleaned regularly to keep them in good working order. Please clean them very carefully with a damp cloth. Any remaining ingrained food should be removed carefully with a toothpick.

To avoid damaging the electronic spark plugs, only use the hob if the burners and pan supports are in the correct place.

Troubleshooting guide

If the hob is not working properly, work through this guide before contacting our Customer Care Centre.

Problem: The burner does not ignite or the flame is unsteady. Check that:

1. The gas or electricity supply has not been interrupted and the control knob is switched on.
2. The gas supply has not run out.
3. The openings on the burner are not blocked.
4. The end of the electronic spark plug is clean.
5. All the parts of the burner are in the correct position.

Problem: The flame goes out. Check that:

1. The control knob was pushed in properly when switching on the burner and for the time required to activate the safety thermocouple.
2. The openings on the burner to the thermocouple are not blocked.
3. The end of the thermocouple is clean.

Problem: The pans are not stable. Check that:

1. The base of the pan is completely flat.
2. The pan is in the centre of the burner.
3. The pan supports are correctly positioned with all the rubber feet in place.

If you are still experiencing problems despite carrying out these checks and after switching the hob off and on again, please contact our Customer Care Centre on 00800-3810-4026.

After-sales Service

Before contacting our Customer Care Centre, please check to see if you can rectify the problem by referring to the troubleshooting guide.

1. If the fault persists, contact us on 00800-3810-4026. It will help us to help you if you have the following information ready to hand:

- A short description of the fault.
- The serial number and model number of the appliance.
- The service number (the number following the word "Service" on the rating plate on the bottom of the hob; the service number can also be found in the warranty booklet.
- Your name, full address (including postcode) and telephone number.

Note: If there is a problem with your hob, failure to contact us could seriously compromise the safety and quality of the appliance.





FOR THE WAY IT'S MADE.

Whirlpool Europe S.r.l. – Socio Unico
Viale G. Borghi, 27 – 21025 Comerio (VA)
Phone +39 0332 759111 – Fax +39 0332 759268
www.whirlpool.eu

Printed in Italy
06/16

400010887323