# KEIPP 12020

12NC: 851351001000

EAN code: 8003437220951

KitchenAid



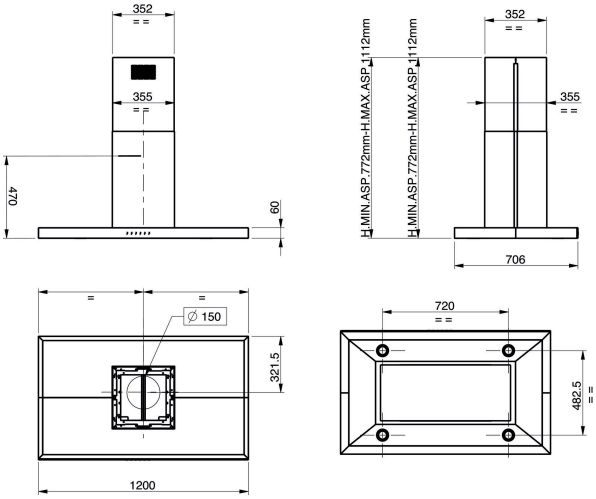


## MAIN FEATURES

| | |
|---|---|
| Product group | Hood |
| Colour body | Inox |
| Material body | Stainless steel antifinger print |
| Colour chimney | Inox |
| Material chimney | Stainless steel |
| Typology | Traditional |
| Installation type | Free-standing |
| Type of control | Electronic |
| Type of control setting and signalling devices | - |
| Decor panel options | N/A |
| Motor location | Integrated motor in hood chimney |
| Operating Mode | Convertible |
| Connection rating (W) | 310 |
| Current (A) | 0,7 |
| Voltage (V) | 220-240 |
| Frequency (Hz) | 50-60 |
| Length of Electrical Supply Cord (cm) | 150 |
| Plug type | Schuko |
| Height of the chimney (mm) | 530-1125 |
| Height of product, without chimney (mm) | 619 |
| Height of the product | 772 |
| Width of the product | 1200 |
| Depth of the product | 706 |
| Minimum niche height | 0 |
| Minimum niche width | 0 |
| Niche depth | 0 |
| Net weight (kg) | 17 |

## TECHNICAL FEATURES

| | |
|---|---|
| Type of manual control devices | Knob |
| Type of automatic control devices | - |
| Number of motors | 1 |
| Total power of the motors (W) | 160 |
| Number of speed settings | 4 |
| Boost position | Yes |
| Maximum output air extraction (m3/h) | 779 |
| Boost position air extraction (m3/h) | 779 |
| Maximum output recirculating air (m3/h) | 712 |
| Boost position output recirculating (m3/h) | 712 |
| Light Control Type | On/off |
| Number of lights | 4 |
| Type of lamps used | LED |
| Total power of the lamps (W) | 10 |
| Diameter of air outlet (mm) | 150 |
| No-return airflow flap | Yes |
| Grease filter material | Washable aluminium |
| Odour filter | No |

## PERFORMANCES

| | |
|---|---|
| Sound power at min. speed (2010/30/EC) | 56 |
| Sound power at max. speed (2010/30/EC) | 66 |
| Noise level with boost position (dB(A) re 1 pW) | 0 |