KHMD4 60510

12NC: 851349538000

EAN code: 8003437831898

KitchenAid



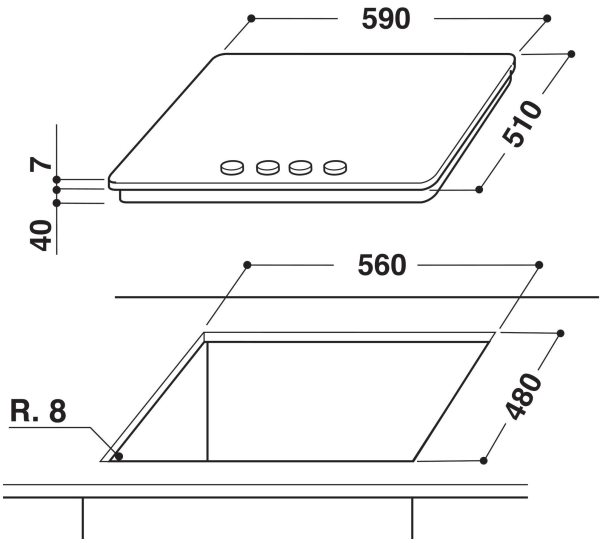

MAIN FEATURES

Product group	Hob
Construction type	Built-in
Type of control	Mechanical
Type of control setting and signalling devices	-
Number of gas burners	4
Number of electric cooking zones	0
Number of electric plates	0
Number of radiant plates	0
Number of halogen plates	0
Number of induction plates	0
Number of electric warming zones	0
Location of control panel	Hob Front
Basic surface material	Inoxclearcoat
Main colour of product	Inox
Electrical connection rating (W)	0
Gas connection rating (W)	8300
Current (A)	0,2
Voltage (V)	230
Frequency (Hz)	50
Length of Electrical Supply Cord (cm)	85
Plug type	No
Gas connection	Conic
Width of the product	590
Height of the product	41
Depth of the product	510
Minimum niche height	38
Minimum niche width	560
Niche depth	480
Net weight (kg)	10.50
Automatic programmes	No

TECHNICAL FEATURES

Power on indicator	No
Plate on indicator	0
Type of regulation	Semirapid
Type of lid	Without
Residual heat indicator	without
Main on/off switch	No
Safety device	-
Timer	No

PERFORMANCES

Energy input	Gas