KHGD5 86510

12NC: 851349138000

EAN code: 8003437831805

KitchenAid



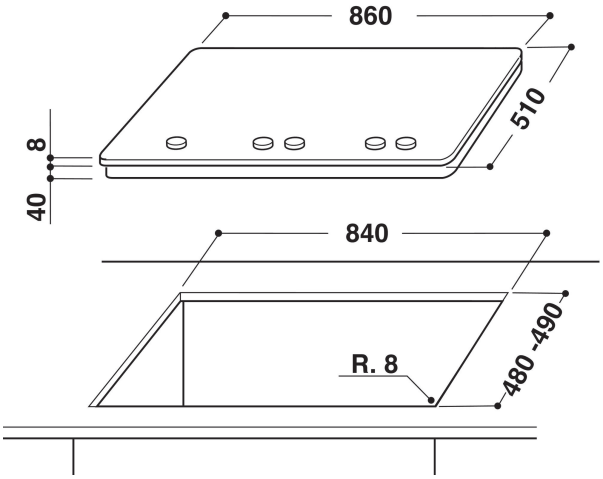

MAIN FEATURES

Product group	Hob
Construction type	Built-in
Type of control	Mechanical
Type of control setting and signalling devices	-
Number of gas burners	5
Number of electric cooking zones	0
Number of electric plates	0
Number of radiant plates	0
Number of halogen plates	0
Number of induction plates	0
Number of electric warming zones	0
Location of control panel	Hob Front
Basic surface material	Glass
Main colour of product	Black
Electrical connection rating (W)	0
Gas connection rating (W)	12500
Current (A)	0,2
Voltage (V)	220-240
Frequency (Hz)	50
Length of Electrical Supply Cord (cm)	85
Plug type	No
Gas connection	Conic
Width of the product	860
Height of the product	49
Depth of the product	510
Minimum niche height	41
Minimum niche width	840
Niche depth	490
Net weight (kg)	17.60
Automatic programmes	No

TECHNICAL FEATURES

Power on indicator	No
Plate on indicator	0
Type of regulation	Semirapid
Type of lid	Without
Residual heat indicator	without
Main on/off switch	No
Safety device	-
Timer	No

PERFORMANCES

Energy input	Gas