KCBMR 18600

12NC: 851312196000

GTIN (EAN) code: 8003437040863

KitchenAid



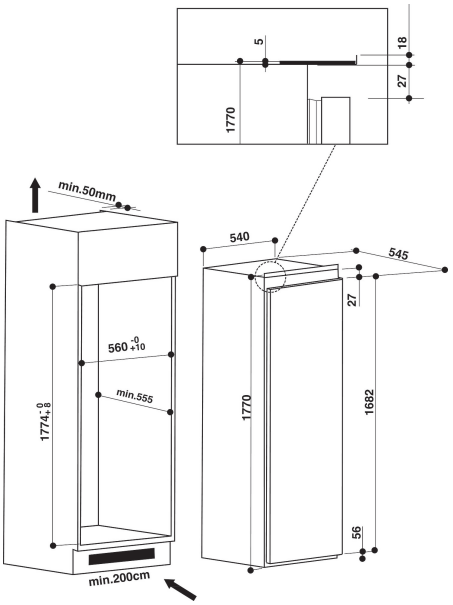

MAIN FEATURES

Product group	Refrigerator
Commercial code	KCBMR 18600
GTIN (EAN) code	8003437040863
Construction type	Built-in
Installation type	Full-integrated
Type of control	Electronic
Type of control settings	7 segments
Main colour of product	White
Electrical connection rating (W)	80
Current (A)	16
Voltage (V)	220-240
Frequency (Hz)	50
Length of Electrical Supply Cord (cm)	245
Plug type	Schuko
Total unit net capacity (l)	290
Star Rating	4
Number of independent cooling systems	1
Height of the product	1770
Width of the product	540
Depth of the product	545
Depth with open door 90 degree (mm)	-
Maximum adjustability feet	0
Net weight (kg)	62
Door hinge	Right reversible

TECHNICAL FEATURES

Temperature adjustable	Yes
Warning signal / Malfunction	Both visual and audible
Defrost process fridge section	Automatic
Fast cooling possibility	No
Interior ventilator fridge section	Yes
Shelves for Bottles	No
Lockable door	-
Number of shelves in fridge compartment	5
Number of Adjustable Shelves in fridge compartment	4
Material of the shelves	Glass
Thermometer fridge section	None

PERFORMANCES

Energy efficiency class - NEW (2010/30/EU)	A++
Energy consumption annual (kWh/annum) - NEW (2010/30/EU)	219
Refrigerator Net capacity (l) - NEW (2010/30/EU)	260
Freezer Net capacity (l) - NEW (2010/30/EU)	30
Freezing capacity (kg/24h) - NEW (2010/30/EU)	3
Temperature rise time (h)	14
Climate class	SN-T
Noise level (dB(A) re 1 pW)	35
Frost free system	No
Maximum ambient temperature	43
Minimum ambient temperature	10