Instructions for use

KitchenAid

Installation diagrams 4

Important safety informations 6

Safeguarding the environment 9

Declaration of conformity 9

Before use 9

Using existing pots and pans 10

Recommended pan base diameters 10

Installation 10

Electrical connection 11

Instructions for use 12

Cleaning 16

Troubleshooting guide 16

After-Sales Service 17

Power level table 18

Functions table 19

Cooking table 20

Installation diagrams

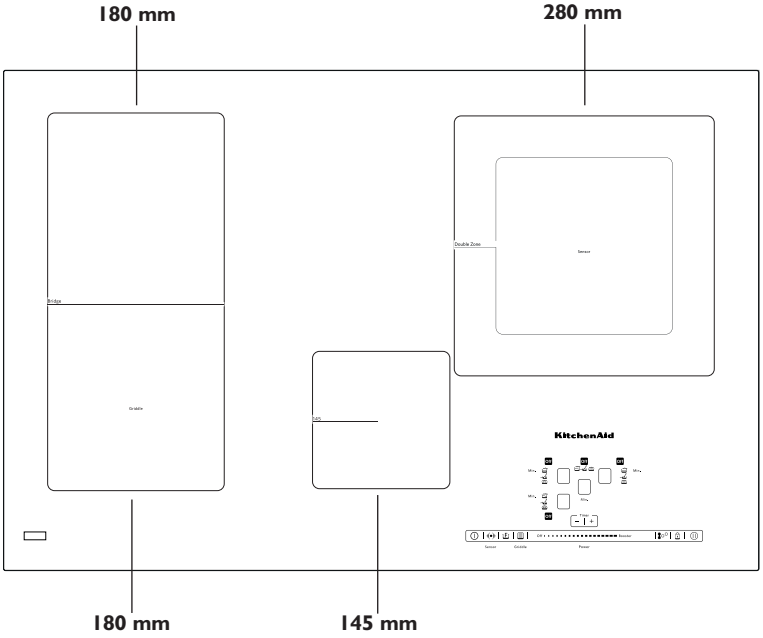

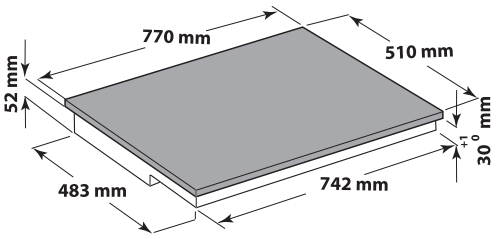

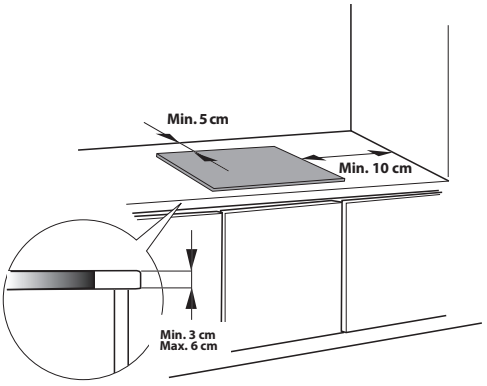

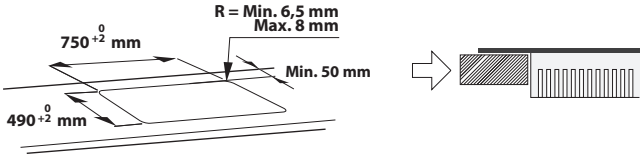

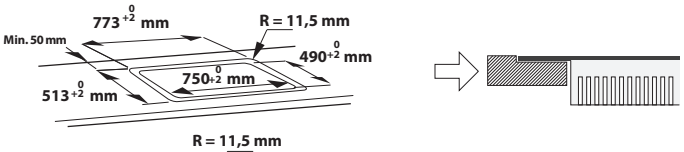

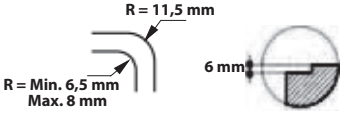

Installation diagrams

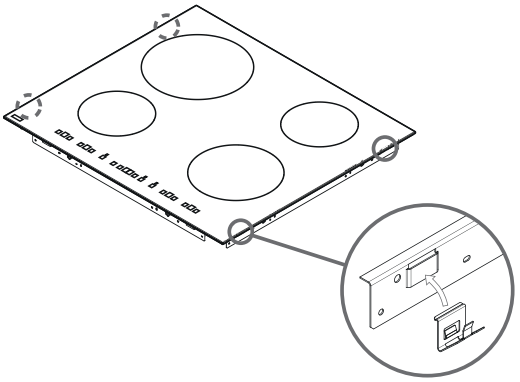

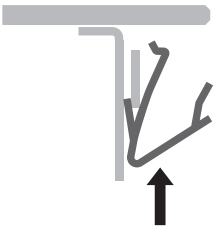

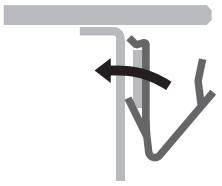

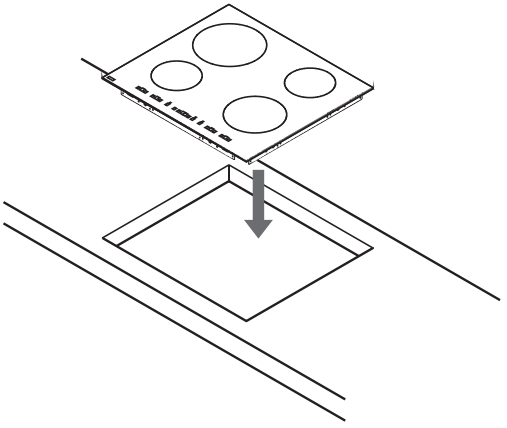

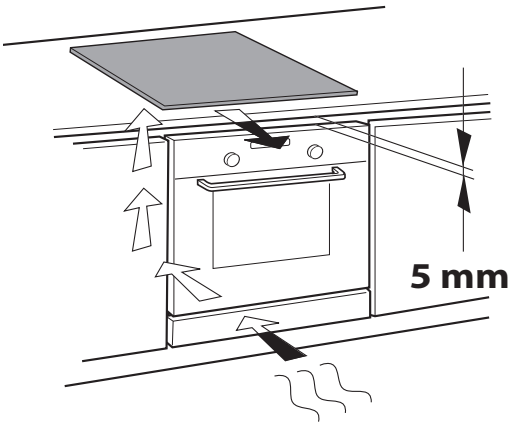

IMPORTANT SAFETY INSTRUCTIONS

YOUR SAFETY AND THAT OF OTHERS IS VERY IMPORTANT

This manual and the appliance itself provide important safety messages, to be read and always observed.



This is the danger symbol, regarding safety, warning of potential risks to users and others.
All safety messages will be preceded by the danger symbol and the following words:

⚠ DANGER — **Indicates a hazardous situation which, if not avoided, will result in serious injury.**

⚠ WARNING — **Indicates a hazardous situation which, if not avoided, could cause serious injury.**

All messages relevant to safety specify the potential risk to which they refer and indicate how to reduce the risk of injury, damage and electric shocks due to incorrect use of the appliance.

Make sure to comply with the following:
- Use protective gloves to perform all unpacking and installation operations.
- The appliance must be disconnected from the power supply before carrying out any installation operation.
- Installation and maintenance must be carried out by a specialised technician, in compliance with the manufacturer's instructions and the local safety regulations in force. Do not repair or replace any part of the appliance unless specifically stated in the user manual.
- The appliance must be earthed.
- The power cable must be long enough for connecting the appliance, fitted in the cabinet, to the power supply.
- For installation to comply with the current safety regulations, an omnipolar switch with minimum contact gap of 3mm is required.

- Do not use multi-sockets or extension cords.
- Do not pull the appliance's power cable.
- The electrical parts must not be accessible to the user after installation.
- The appliance is designed solely for domestic use for cooking food. No other use is permitted (e.g. heating rooms). The Manufacturer declines any liability for inappropriate use or incorrect setting of the controls.
- The appliance and its accessible parts become hot during use. Care should be taken to avoid touching heating elements. Very young (0-3 years) and young children (3-8 years) shall be kept away unless continuously supervised.
- Children from 8 years and above and persons with reduced physical, sensory or mental capabilities or lack of experience and knowledge can use this appliance only if they are supervised or have been given instructions on safe appliance use and if they understand the hazards involved. Children shall not play with the appliance. Cleaning and user maintenance shall not be made by children without supervision.
- Do not touch the appliance heating elements during and after use. Do not allow the appliance to come into contact with cloths or other flammable materials until all the components have cooled down completely.
- Do not place flammable materials on or near the appliance.
- Overheated oils and fats catch fire easily. Pay attention when cooking food products rich in fat and oil.
- A separator panel (not supplied) must be installed in the compartment under the appliance.
- If the surface is cracked, switch off the appliance to avoid the possibility of electric shock. (only for appliances with glass surface).
- The appliance is not intended to be operated by means of an external timer or separate remote control system.
- Unattended cooking on a hob with fat or oil can be dangerous and may result in fire. NEVER try to extinguish a fire with water, but switch off the appliance and then cover flame e.g. with a lid or a fire blanket.

Danger of fire: do not store items on the cooking surfaces.
- Do not use steam cleaners.
- Metallic objects such as knives, forks, spoons and lids should not be placed on the hob surface since they can get hot.
- After use, switch off the hob element by its control and do not rely on the pan detector. (only for appliances with glass surface).

Disposal of household appliances
- This product is built from recyclable or reusable materials. Disposal must be carried out in accordance with local regulations for waste disposal. Before scrapping, cut off the power supply cable.
- For further information on the treatment, recovery and recycling of household appliances, contact the competent local authority, the domestic waste collection service or the shop where you purchased the product.

Safeguarding the environment

Disposal of packaging materials
The packaging material is entirely recyclable and marked with the recycling symbol ( ). Do not dispose of the various packaging materials carelessly, but do so responsibly and in full compliance with local authority regulations governing waste disposal.

Scrapping
This appliance is marked in compliance with European Directive 2012/12/EU on Waste Electrical and Electronic Equipment (WEEE).
By ensuring this product is disposed of correctly, you will help prevent potential negative consequences for the environment and human health.
The symbol on the appliance or accompanying documentation indicates that this product should not be disposed of as unsorted municipal waste but must be taken to a collection point for the treatment of WEEE.

Energy saving tips
For optimum results, observe the following advice:
- Use pots and pans whose bottom diameter is equal to that of the cooking zone.
- Only use flat-bottomed pots and pans.
- If possible, keep pot lids on when cooking (except for use in "SENSOR" mode).
- Cook vegetables, potatoes, etc. with little water in order to reduce cooking time.
- Use a pressure cooker to save even more energy and time (except for use in "SENSOR" mode).
- Make sure you place the pot or pan in the centre of the cooking zone outlined on the hob.

Declaration of conformity

This appliance has been designed, constructed and marketed in compliance with the safety requirements of "Low Voltage" Directive 2006/95/EC (replacing 73/23/EEC as amended) and protection requirements of "EMC" Directive 2004/108/EC.
This appliance meets the eco design requirements of European regulation N. 66/2014, in conformity to the European standard EN 60350-2.

Before use

IMPORTANT: the cooking zones will not switch on if pots and pans are not of the correct dimensions. Only use pots bearing the symbol "INDUCTION SYSTEM" (See figure opposite). Before switching the hob on, position the pot on the desired cooking zone.



Using existing pots and pans

Use a magnet to check whether pots or pans are suitable for use on the induction hob: pots are unsuitable if they cannot be magnetically detected.

- Ensure pots have a smooth bottom, otherwise they may scratch the hob's glass ceramic surface. Check dishes.
- Never place hot pots or pans on the hob's control panel. This could result in damage.

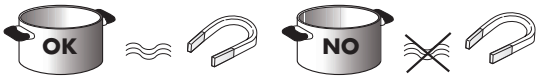

Recommended pan base diameters

XL Ø 30 cm	Ø 14 cm → 30 cm	XL Ø 28 cm	Ø 18 cm → 28 cm
L Ø 24 cm	Ø 17 cm → 24 cm	L Ø 21 cm	Ø 15 cm → 21 cm
M Ø 18 cm	Ø 14 cm → 18 cm	S Ø 14,5 cm	Ø 11 cm → 14,5 cm

IMPORTANT: Refer to the "SENSOR" section for correct pan base diameters for cooking zones with SENSOR function.

Installation

After unpacking the hob, check that there has been no damage during transport. If in doubt, contact the dealer or After-sales Service.

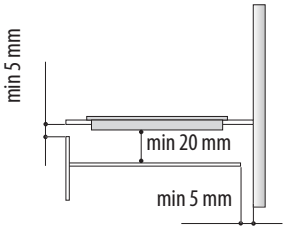

PREPARING THE HOUSING UNIT

⚠ WARNING

- **Install a separator panel under the hob.**
- **The lower part of the product must not be accessible after installation.**
- **If there is an oven beneath the hob, do not install the seperator panel.**

- For the distance between the underside of the appliance and the separator panel below, observe the dimensions given in the figure.
- Do not obstruct the minimum required clearance between the hob and the top of the unit to ensure the correct operation of the product.
- Cut the worktop to fit before installing the hob and carefully remove any shavings or sawdust.
- If there is an oven beneath the hob, check it has a cooling system.
- For flush-mounting, call the After-Sales Service to fit screw kit 4801 211 00112 supplied with the product.
- Do not install the hob over a dishwasher or washing machine as the electronic circuits could be damaged by any steam and humidity.

Electrical connection

⚠ WARNING

- **Disconnect the appliance from the mains power supply.**
- **Installation must be carried out by a qualified electrician who is fully aware of current safety and installation regulations.**
- **The manufacturer declines all liability for injury to persons or animals and for damage to property resulting from failure to observe the regulations provided in this chapter.**
- **The power supply cable must be long enough to allow the hob to be removed from the worktop.**
- **Make sure the voltage specified on the appliance rating plate is the same as that of the house electrical system.**
- **Do not use extension leads.**

Connecting to the terminal board
Use an H05RR-F cable as indicated in the table below for the electrical connection.

Conductors	**Amount x size**
220-240 V ~ + ⏚	3 x 4 mm²
220-240 V 3 ~ + ⏚	4 x 1,5 mm²
380-415 V 3N ~ + ⏚	5 x 1,5 mm²
380-415 V 2N ~ + ⏚	4 x 1,5 mm²

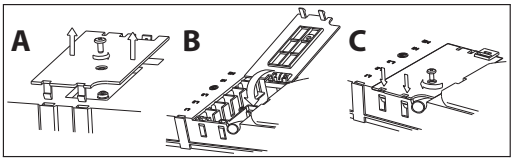

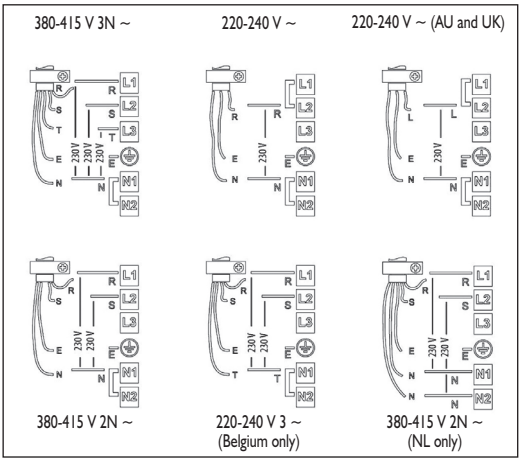

Connect the yellow/green earth wire to the terminal with the symbol ⏚ .
This wire must be longer than the other wires.
1. Remove the terminal block cover (**A**), undoing the screw and inserting the cover in the terminal block hinge (**B**).
2. Strip approx. 70 mm of sheath from the power supply cable.
3. Strip approx. 10 mm of sheath from the wires. Insert the power supply cable into the cable clamp and connect the wires to the terminal board as indicated in the diagram next to the terminal board itself.
4. Secure the power cable with the cable clamp.
5. Close the cover (**C**) and screw it on the terminal block with the removed screw - point (**1**).

Each time the cooktop is connected to the mains it carries out an automatic check which lasts several seconds.
If the hob already has a power cable, follow the instructions on the instruction label attached to the cable.
Connect the appliance to the mains electricity supply using a multipole switch disconnector with minimum contact gap of 3 mm.

Instructions for use

Control Panel Description
The control panel is equipped with touch controls: to use them, just press the corresponding symbol (a light touch is sufficient).

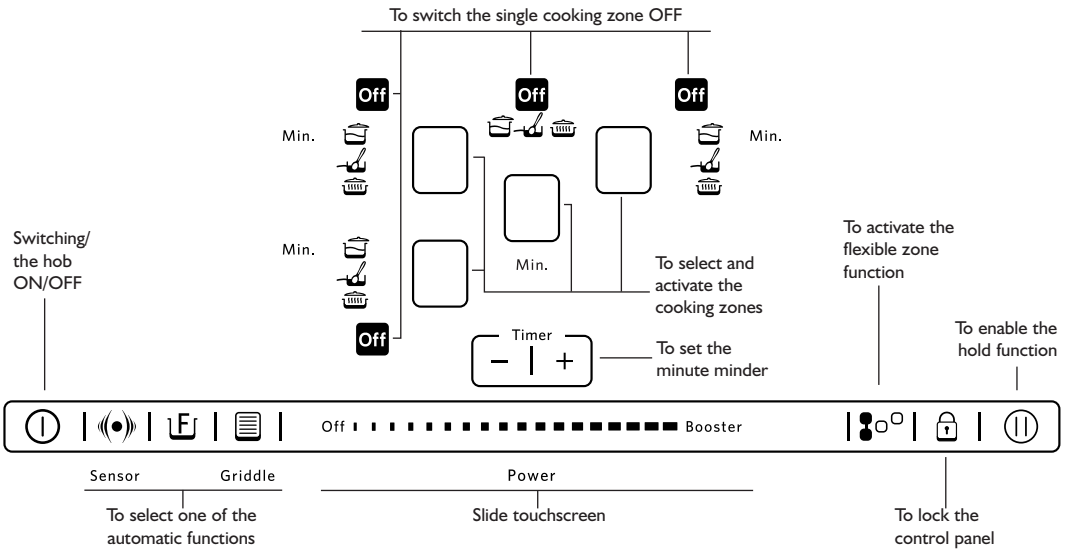

First use / after a power failure
After connecting the hob to the electrical power supply, the control panel is locked (the indicator light above the key is ON).
To unlock the control panel, press and hold the key for 3 seconds. The indicator light switches off and the hob can be used normally.

Switching the hob ON/OFF
To switch the hob on, press and hold down the key for about 2 seconds: the indicator light above the key turns on and hyphens appear inside the cooking zone circles.
To switch off, press the same key until the hob switches off. All the cooking zones are deactivated.

Switching the single cooking zone OFF
To switch OFF the single cooking zone, press the Off corresponding button.

The hob automatically switches off if no function is selected within 10 seconds of switching on.

Activating and adjusting cooking zones

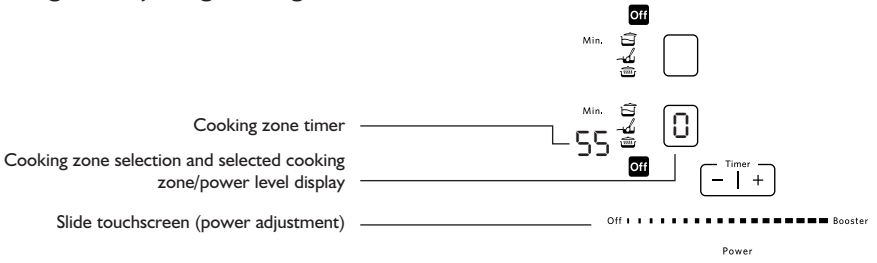

After switching the hob on, position a pot on the required cooking zone.
Activate the cooking zone by pressing the relative round key: the round key displays number 0 that corresponds to the intermediate power level.

Instructions for use



 If you are using a pot that is not suitable, not correctly positioned or not of the correct dimensions for your induction hob, the message "no pot" will appear in the display (see figure on the left). If no pot is detected within 60 seconds, the hob switches off.

 To change the power level, move your finger horizontally on the slide touchscreen: the number inside the circle will change with just a quick slide of the finger from a minimum of 1 to a maximum of 9. You can activate the booster function by pressing "BOOST" on the slide touchscreen ("P" on the display). The "BOOST" power level can be used for up to 10 minutes, after which the appliance automatically switches to level 9. If more than one cooking zone is on, the slide touchscreen allows you to change the power level of the selected zone, indicated by the presence of a luminous dot at the bottom right of the power level indicator. To select a zone, simply press the relative round key.

Deactivating cooking zones
Select the cooking zone to be switched off by pressing the relative round key (a dot lights up at the bottom right of the power level indicator). Press OFF on the slide touchscreen.

 The cooking zone switches off and, if the zone is still hot, the letter "H" appears in the circle. "H" is the residual heat indicator. The hob has a residual heat indicator for each cooking zone; these indicators alert the user when cooking zones are still hot. When the cooking zone cools down, the display switches off.

Timer selection
The timer can be used to set a max. cooking time of 90 minutes.
Select the cooking zone to be used with the timer (a luminous dot appears at the bottom right of the power level indicator on the display), then set the required time using the + and - keys of the timer function: the time in minutes is shown next to the cooking zone display.
A few seconds after the last press, the timer begins the countdown (the cooking zone selection dot starts flashing).
Once the set time has elapsed, an acoustic signal sounds and the cooking zone switches off automatically.
For the timer associated with the SENSOR function, refer to the description of the function on the following pages.

Control panel lock
This function locks the hob controls to prevent accidental activation (e.g. during cleaning).
Press the  : key for three seconds: an acoustic signal sounds and an indicator light turns on above the lock symbol to confirm activation. The control panel is locked with the exception of the OFF function. To unlock the controls, repeat the activation procedure. The luminous dot goes off and the hob is active again.
IMPORTANT: The presence of water, liquid spilled from pots or any objects resting on the key below the symbol can accidentally activate or deactivate the control panel Lock function.

Hold
This function allows you to temporarily hold and then resume cooking processes maintaining previous settings (except for SENSOR function and timer setting). Press the  key :  blinks on the display in place of the power levels.
To resume cooking, press the  key again.

Flexible Zone

This function allows you to use two cooking zones as an extra-large single zone. It is perfect for oval, rectangular and elongated pans (with maximum base dimensions of 40x18 cm). After switching on the hob, press the : key : the two cooking zone displays show level "0"; both dots next to the level number are alight, indicating selection as a single cooking zone. To change the power level, slide your finger on the touchscreen: the number inside the circle will change with just a quick slide of the finger from a minimum of 1 to a maximum of 9. To deactivate the flexible zone function, press the key : the plates resume operation as two separate cooking zones. To switch off the cooking zone, press OFF.

The booster power level and SENSOR function cannot be used when the flexible zone function is in use. If you use the timer, the time will appear next to the display of the highest plate.

Description of automatic functions

The hob features automatic functions for each cooking zone. The symbols of the available functions are shown next to the selection key of each cooking zone. Every time an automatic function is selected, an indicator light turns on next to the symbol and the letter "A" appears in the cooking zone display.

SENSOR

The SENSOR function automatically selects the ideal power level to bring water to the boil and signals boiling point.
After positioning the pot containing water on the zone displaying the word SENSOR, switch on the hob and select the zone. Press the key : "A" appears on the display and the indicator light turns on. An animation is displayed in the space next to the zone as it heats up.

To ensure correct operation of the SENSOR function, we recommend that you:
- use water only (at ambient temperature);
- do not add salt, ingredients or seasoning (until boiling point);
- do not change the zone's power level, remove or move the pot;
- use pots and pans with base diameter between 24 and 28 cm;
- fill the pot to at least 1/3 full (about 1litre) and never to the brim (max. 7 litres);
- do not use pressure cookers.

For optimum results, please also observe the following advice:
- do not put the lid on the pot that is being used with the SENSOR function;
- do not activate the SENSOR function if the zone is still hot (letter "H" on the display).

When the boiling point is reached, the hob emits an acoustic signal. The acoustic signal sounds three times at regular intervals. After the second signal, a minute counter automatically begins counting the boiling time. After the third signal, the hob automatically selects a lower power level suitable for maintaining the boil. From this moment you can add the ingredients, set the timer or change the power level.
Changing the power level or activating the hold function, the SENSOR function is deactivated.
- The hob manages the SENSOR function and booster levels autonomously, therefore, in some cases, it may not be possible to activate the booster with the SENSOR function already in use;
- the quality of the cookware may affect the performance of the SENSOR function.

Multifunction key

This key allows you to select the simmering, melting or keep warm function with a specific cooking zone. After selecting the zone, press the key; the indicator light near the special function symbols next to each cooking zone indicates the automatic function selected. Press the key repeatedly to set the required function.

Instructions for use

Simmering

Bring the foodstuff to the boil then press the relative key to select the simmering function; an appropriate power level will be set automatically to keep it just under the boil. To deactivate the function, simply press OFF on the slide touchscreen.

Melting

This function maintains a permanently low temperature in the cooking zone. After positioning the pot/accessory on the chosen cooking zone, switch on the hob and select the cooking zone. Press the key repeatedly to select the function. To deactivate the function, simply press OFF on the slide touchscreen.

Keep Warm

Identifies a power level that is suitable for keeping meals warm. After positioning the pot/accessory on the chosen cooking zone, switch on the hob and select the cooking zone. Press the key repeatedly to select the function. To deactivate the function, simply press OFF on the slide touchscreen.

GRIDDLE

This function allows you to grill various types of food using the specific accessory.

ⓘ Only use the accessory supplied.
The use of any other accessory may compromise the performance of the function.
Position the accessory on the cooking zone displaying the word "GRIDDLE". Press the key, an indicator light turns on above the key and the letter "A" appears simultaneously on the display.
When the hob has almost finished heating the accessory, a beep will sound every 30 seconds three times. You can now put the food in the pot. At the second beep, a minute counter starts to measure the time that the accessory has been at the ideal temperature for.

ⓘ When the GRIDDLE function is in use, the "flexible zone" and "booster" functions cannot be activated on the same cooking zone.

Cleaning

⚠ WARNING

- **Never use steam cleaners.**
- **Before cleaning, make sure the cooking zones are switched off and that the residual heat indicator ("H") is not displayed.**

IMPORTANT: do not use abrasive sponges or pan scourers. as they could ruin the glass surface.

- Clean the hob, when it is cool, after each use in order to remove any food residues.
- Sugar and foods with a high sugar content damage the glass ceramic surface and must be immediately removed.
- Salt, sugar and sand can scratch the glass surface.
- Use a soft cloth, absorbent kitchen wipes or a specific hob cleaner (follow the Manufacturer's instructions).

Troubleshooting guide

- Read and follow the instructions given in the section "Instructions for use".
- Connect the hob to the electricity supply and check that the supply has not been shut off.
- Clean the hob and dry it thoroughly.
- If you are unable to turn the hob off after using it, disconnect it from the power supply.
- If, when the hob is switched on, alphanumeric codes appear on the display, consult the following table for instructions.

ERROR CODE	DESCRIPTION	POSSIBLE CAUSES	REMEDY
The hob switches off and after 30 seconds emits an acoustic signal every 10 seconds.	Continuous pressure on control panel area.	Water or utensils on control panel.	Clean the control panel.
C81, C82, C83	The control panel switches off because of excessively high temperatures.	The internal temperature of electronic parts is too high.	Wait for the hob to cool down before using it again.
F42 or F43	The connection voltage is wrong.	The sensor detects a discrepancy between the appliance voltage and that of the mains supply.	Disconnect the hob from the mains and check the electrical connection.
F12, F21, F25, F36, F37, F40, F47, F56, F58, F60, F61, F62, F63, F64	Call the After-Sales Service and specify the error code.		

After-Sales Service

Before contacting the After-Sales Service

1. See if you can eliminate the problem on your own by referring to the "Troubleshooting guide".

2. Turn the hob off and on again to check if the problem has been eliminated.

If the fault persists after the above checks, contact the nearest After-Sales Service.

Always specify:

- a brief description of the fault;
- the type of product and exact model;
- the Service number (the number after the word Service on the rating plate) located under the appliance (on the metal plate). The Service number is also given in the warranty booklet;
- your full address;
- your telephone number and area code.



If any repairs are required, contact an **authorised After-Sales Service Centre** (to ensure the use of original replacement parts and correct repairs). Replacement parts will be available for 10 years.

Power level table

Power level		Type of cooking	Level use (indicating cooking experience and habits)
Max. power	**Boost**	To heat quickly.	Ideal for rapidly increasing the temperature of food to fast boiling in the case of water or rapidly heating cooking liquids.
	8-9	To fry - boil	Ideal for browning, starting to cook, frying deep frozen products, fast boiling.
High power	**7-8**	To brown - sauté - boil - grill.	Ideal for sautéing, maintaining a lively boil, cooking and grilling (for a short period of time, 5-10 minutes).
	6-7	To brown - cook - stew sauté - grill	Ideal for sautéing, maintaining a light boil, cooking and grilling (for a medium period of time, 10-20 minutes), preheating.
	4-5	To cook - stew sauté - grill	Ideal for stewing, maintaining a gentle boil, cooking and grilling (for a long period of time).
Medium power	**3-4**	To cook - simmer - thicken - cream pasta	Ideal for long-cooking recipes (rice, sauces, roasts, fish) with liquids (e.g. water, wine, broth, milk), creaming pasta.
	2-3		Ideal for long-cooking recipes (quantities under 1 litre: rice, sauces, roasts, fish) with liquids (e.g. water, wine, broth, milk).
Low power	**1-2**	To melt - thaw	Ideal for softening butter, gently melting chocolate; thawing small products.
	1	To keep food warm To cream risotto	Ideal for keeping small portions of just-cooked food or serving dishes warm and for creaming risotto.
OFF	**Zero power**	Support surface	Hob in stand-by or off mode (possible end-of-cooking residual heat, indicated by an "H").

Functions table

Function		Description of automatic functions
	Simmering	Identifies a power level that is suitable for simmering long-cooking recipes. Suitable for cooking tomato sauce, ragu, soups, minestrone, maintaining a constant cooking level; ideal for cooking in a bain-marie (creams) and regenerating cooked food. Prevents food from boiling over or sticking to the bottom and burning, as often happens with these recipes. Use this function after bringing the food to the boil.
	Melting	Identifies a power level that is suitable for slowly melting delicate products without compromising their sensorial quality (chocolate, butter, etc.).
	Keep warm	Identifies a power level that is suitable for keeping meals or serving dishes warm.
	Sensor	Automatically senses when the water reaches the boiling point and reduces the power to maintain the boil until the food is added. When the water reaches the boiling point, an acoustic signal indicates that you can add the desired ingredients (e.g. seasoning, pasta, rice, vegetables, meat and fish to be boiled), but also homemade preserves or accessories to be sterilised.
	Flexible zone	This function combines two cooking zones to offer an extra-large cooking surface for rectangular and oval containers or grilling pans. To grill large or many food items (fish, kebabs, vegetables, steaks, wurstels). To cook recipes with liquids or broth such as roulades and whole fish in casseroles/fish kettles/pans.
	Griddle	Designed to be used exclusively with the accessory supplied. This function automatically identifies a power level that is ideal for grilling various types of food. Wait until the function signals that the accessory is preheated, then place food on it. The accessory supplied provides uniform heat distribution that ensures perfect grilling of any type of food (meat, fish, vegetables); e.g. kebabs, steaks, hamburgers, slices of fish, wurstels, cheese, vegetables.

Cooking table

Food categories	Dishes or type of Cooking	Power level and cooking status			
		First stage	Power	Second stage	Power
Pasta, rice	Fresh pasta	Heating the wate	Booster - 9	Cooking the pasta and maintaining the boil	7-8
	Dry pasta	Heating the water	Booster - 9	Cooking the pasta and maintaining the boil	7-8
	Boiled rice	Heating the water	Booster - 9	Cooking the rice and maintaining the boil	5-6
	Risotto	Sautéing and roasting	7-8	Maintaining the right cooking temperature	4-5
Vegetables Pulses	Boiled	Heating the water	Booster - 9	Cooking	6-7
	Fried	Heating the oil	9	Frying	8-9
	Sautéed	Heating the accessory	7-8	Cooking the food	6-7
	Stewed	Heating the accessory	7-8	Cooking and maintaining the temperature	3-4
	Browned	Heating the accessory	7-8	Browning the soffritto	7-8
Meat	Roast	Browning the meat with oil (if with butter power level 6)	7-8	Cooking	3-4
	Grilled	Preheating the grill	7-8	Grilling on both sides	7-8
	Browned	Browning with oil (if with butter power level 6)	7-8	Cooking	4-5
	Stewed	Browning with oil (if with butter power level 6)	7-8	Cooking and maintaining the temperature	3-4

Cooking table

Food categories	Dishes or type of Cooking	Power level and cooking status			
		First stage	Power	Second stage	Power
Fish	Grilled	Preheating the grill	7-8	Cooking on both sides	7-8
	Stewed	Browning with oil (if with butter power level 6)	7-8	Cooking and maintaining the temperature	3-4
	Fried	Heating the oil or fatty matter	8-9	Frying, browning	7-8
Eggs	Frittata	Heating the pan with butter or fatty matter	6	Cooking on both sides	6-7
	Omelettes	Heating the pan with butter or fatty matter	6	Cooking	5-6
	Soft/hard-boiled	Heating the water	Booster - 9	Cooking	5-6
	Pancakes	Heating the pan with butter	6	Cooking on both sides	5-6
Sauces	Tomato	Browning with oil (if with butter power level 6)	6-7	Cooking	3-4
	Ragu	Browning with oil (if with butter power level 6)	6-7	Cooking, mantaining a light boil	3-4
	Béchamel	Preparing the base (melt butter and add flour)	5-6	Bring to and maintain a light boil	3-4
Desserts Creams	Pastry cream	Bring the milk to the boil	4-5	Bring to the desired consistency	4-5
	Puddings	Bring the milk to the boil	4-5	Bring to the desired consistency	2-3
	Rice in milk	Heat the milk	5-6	Cooking	2-3



FOR THE WAY IT'S MADE.

Whirlpool Europe S.r.l. - Socio Unico
Viale G. Borghi, 27 - 21025 Comerio (VA)
Phone 0332.759111 - Fax 0332.759268
www.whirlpool.eu

Printed in Italy
04/15

400010769659

GB