KHIP4 77510

12NC: 851348101000

EAN code: 8003437831904

KitchenAid

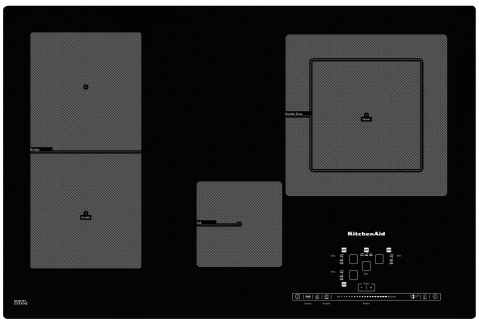

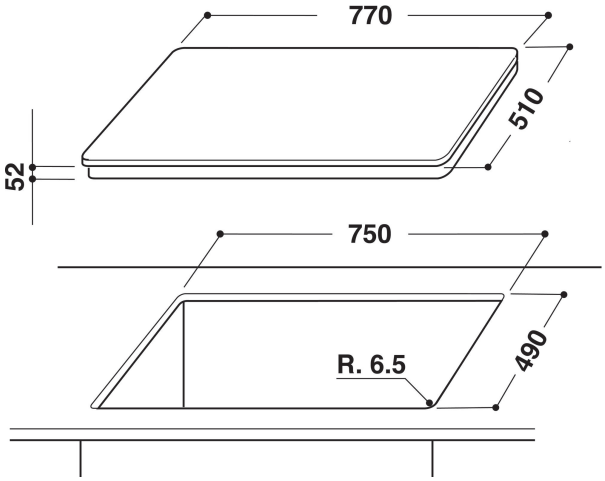

MAIN FEATURES

Product group	Hob
Construction type	Built-in
Type of control	Electronic
Type of control setting and signalling devices	-
Number of gas burners	0
Number of electric cooking zones	4
Number of electric plates	0
Number of radiant plates	0
Number of halogen plates	0
Number of induction plates	4
Number of electric warming zones	0
Location of control panel	Hob Front
Basic surface material	Glass
Main colour of product	Black
Electrical connection rating (W)	8000
Gas connection rating (W)	0
Current (A)	34,4
Voltage (V)	230
Frequency (Hz)	50-60
Length of Electrical Supply Cord (cm)	150
Plug type	No
Gas connection	N/A
Width of the product	775
Height of the product	56
Depth of the product	515
Minimum niche height	30
Minimum niche width	750
Niche depth	490
Net weight (kg)	15
Automatic programmes	Yes

TECHNICAL FEATURES

Power on indicator	Yes
Plate on indicator	4
Type of regulation	Inductor
Type of lid	Without
Residual heat indicator	separate
Main on/off switch	Yes
Safety device	-
Timer	Programmable

PERFORMANCES

Energy input	Electric