KCBCR 20600

12NC: 851301796010

EAN code: 8003437040917

KitchenAid



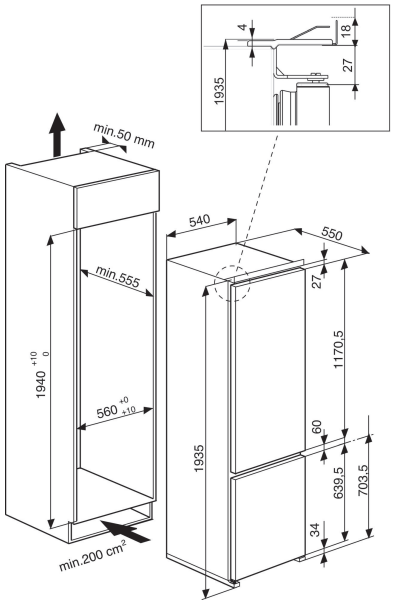

MAIN FEATURES

Product group	Fridge/freezer combination
Installation type	Built-in
Type of control	Electronic
Construction type	Built-in
Main colour of product	Steel
Connection rating (W)	160
Current (A)	16
Voltage (V)	220-240
Frequency (Hz)	50
Number of compressors	1
Length of Electrical Supply Cord (cm)	245
Plug type	Schuko
Total unit net capacity (l)	300
Star Rating	4
Height of the product	1935
Width of the product	540
Depth of the product	550
Maximum adjustability feet	0
Net weight (kg)	58

TECHNICAL FEATURES

Defrost process fridge section	Automatic
Defrost process freezer section	Automatic
Fast cooling switch	Yes
Fast freezing function	Yes
Door opened indicator freezer	Yes
Temperature adjustable	Yes
Temperature adjustable freezer	Yes
Interior ventilator fridge section	Yes
Number of freezing drawers	3
Automatic motor-driven ice-maker	No
Number of shelves in fridge compartment	5
Material of the shelves	Glass
Thermometer fridge section	None
Thermometer freezer section	None
Number of temperature zones	1

PERFORMANCES

Energy efficiency class - NEW (2010/30/EC)	A+
Energy consumption annual (kWh/annum) - NEW (2010/30/EC)	314
Refrigerator Net capacity (l) - NEW (2010/30/EC)	237
Freezer Net capacity (l) - NEW (2010/30/EC)	63
Freezing capacity (kg/24h) - NEW (2010/30/EC)	6
Climate class	SN-T
Noise level (dB(A) re 1 pW)	38
Frost free system	Freezer