Instructions for use
Bedienungsanleitung
Notice d'utilisation
Gebruiksaanwijzing
Istruzioni per l'uso
Instruções de utilização
Οδηγίες χρήσης

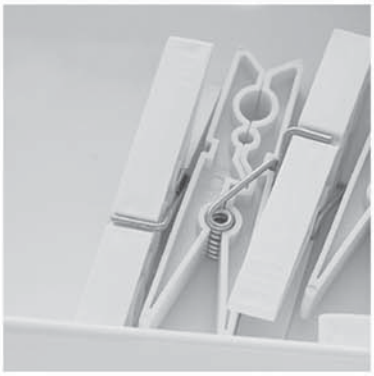

Uputstva za upotrebu
Navodila za uporabo
Пайдалану нұсқаулығы
Upute za uporabu
Lietošanas instrukcija
Naudojimo instrukcija





Kasutusjuhised
Instrukcja obsługi
Návod k obsluze
Návod na použitie
Használati útmutató



Инструкция по эксплуатации
Инструкции за употреба
Instrucţiuni privind siguranţa
Інструкції з використання
دليل الاستعمال

Whirlpool

SENSING THE DIFFERENCE

SENSING THE DIFFERENCE

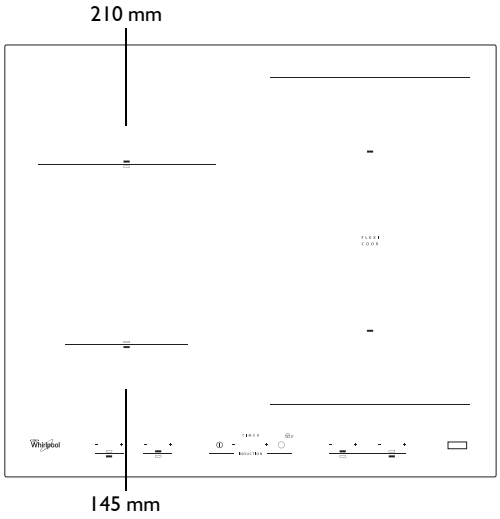

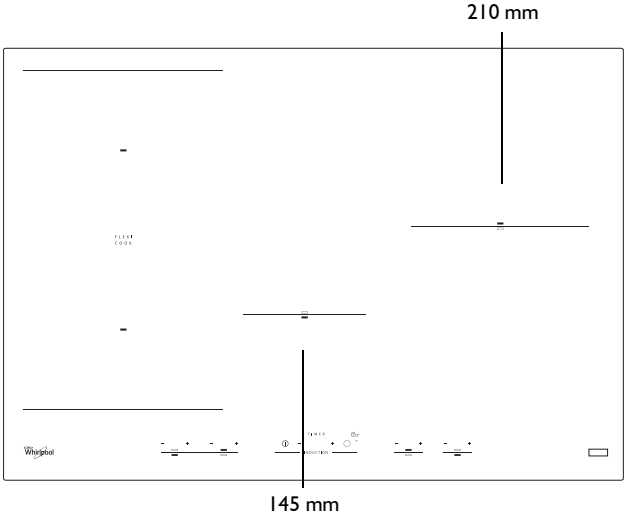

ENGLISH	**Installation**	**Page**	**8**	**Instructions for use**	**Page**	**9**
DEUTSCH	**Installation**	**Seite**	**17**	**Bedienungsanleitung**	**Seite**	**19**
FRANÇAIS	**Installation**	**Page**	**27**	**Mode d'emploi**	**Page**	**28**
PORTUGUÊS	**Instalação**	**Página**	**35**	**Instruções de utilização**	**Página**	**37**
ΕΛΛΗΝΙΚΑ	**Εγκατάσταση**	**Σελίδα**	**45**	**Οδηγίες χρήσης**	**Σελίδα**	**46**
SRPSKI	**Montaža**	**Strana**	**54**	**Uputstvo za upotrebu**	**Strana**	**56**
SLOVENSKO	**Namestitev**	**Stran**	**63**	**Navodila za uporabo**	**Stran**	**64**
ҚАЗАҚ ТІЛ	**Орнату**	**Бет**	**73**	**ПАЙДАЛАНУ НҰСҚАУЛАРЫ**	**Бет**	**74**
HRVAT	**Montaža**	**Stranica**	**83**	**Uputama za uporabu**	**Stranica**	**85**
LATVIEŠU	**Uzstādīšana**	**Lappuse**	**92**	**Lietošanas norādījumi**	**Lappuse**	**93**
LIETUVIŲ	**Įrengimas**	**Puslapis**	**101**	**Naudojimo instrukcijos**	**Puslapis**	**102**
EESTI	**Paigaldamine**	**Lehekülg**	**110**	**Kasutusjuhend**	**Lehekülg**	**111**
POLSKI	**Instalacja**	**Strona**	**120**	**Instrukcja obsługi**	**Strona**	**121**
ČESKY	**Instalace**	**Strana**	**129**	**Návod k použití**	**Strana**	**130**
SLOVENSKY	**Inštalácia**	**Strana**	**137**	**Návod na používanie**	**Strana**	**139**
MAGYAR	**Üzembe helyezés**	**Oldal**	**146**	**Használati útmutató**	**Oldal**	**148**
РУССКИЙ	**Установка**	**Страница**	**156**	**Руководство по эксплуатации**	**Страница**	**158**
БЪЛГАРСКИ	**Инсталиране**	**Страница**	**167**	**Инструкции за употреба**	**Страница**	**168**
ROMÂNĂ	**Instalarea**	**Pagina**	**177**	**Instrucțiuni de utilizare**	**Pagina**	**178**
УКРАЇНЕЦЬ	**Установлення**	**Сторінка**	**186**	**Інструкції з використання**	**Сторінка**	**187**
العربية	**تركيب**	**الصفحة**	**٣**	**الاستعمال تعليمات**	**الصفحة**	**٥**

A

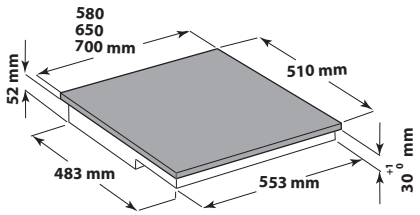
580
650
700 mm
510 mm
52 mm
483 mm
553 mm
30 +1 0 mm

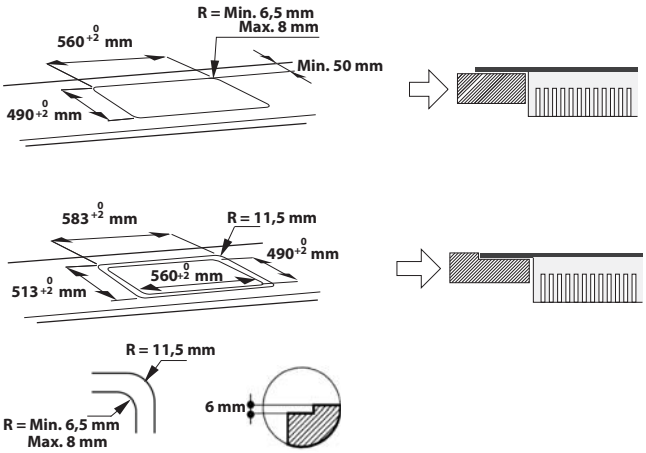
R = Min. 6,5 mm
Max. 8 mm
560 +2 0 mm
Min. 50 mm
490 +2 0 mm
583 +2 0 mm
R = 11,5 mm
490 +2 0 mm
560 +2 0 mm
513 +2 0 mm
R = 11,5 mm
R = Min. 6,5 mm
Max. 8 mm
6 mm

B

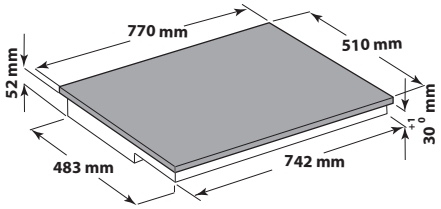
770 mm
510 mm
52 mm
483 mm
742 mm
30 +1 0 mm

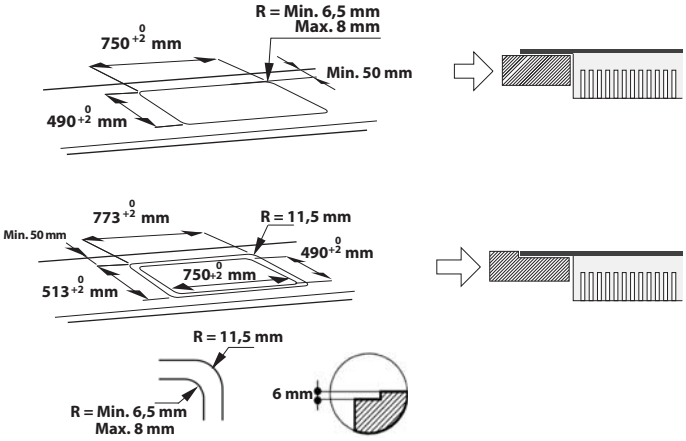
R = Min. 6,5 mm
Max. 8 mm
750 +2 0 mm
Min. 50 mm
490 +2 0 mm
773 +2 0 mm
R = 11,5 mm
Min. 50 mm
490 +2 0 mm
750 +2 0 mm
513 +2 0 mm
R = 11,5 mm
R = Min. 6,5 mm
Max. 8 mm
6 mm

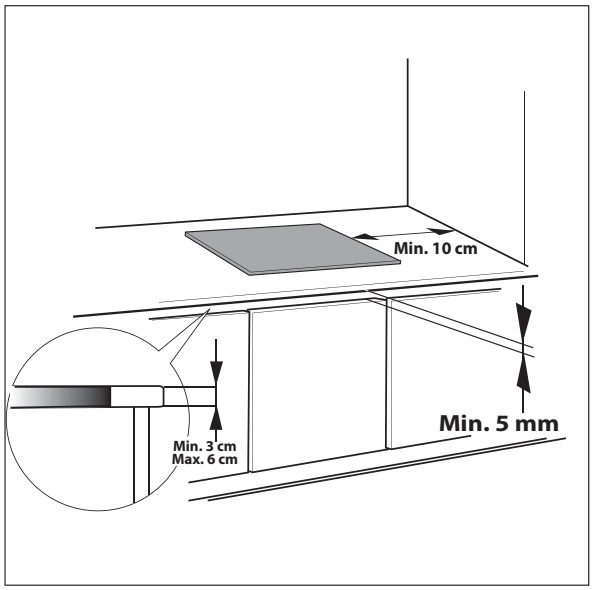
Min. 10 cm
Min. 5 mm
Min. 3 cm
Max. 6 cm

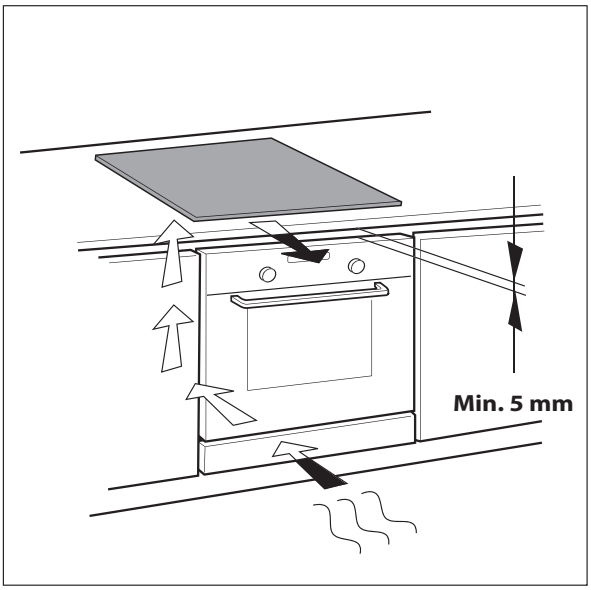
Min. 5 mm

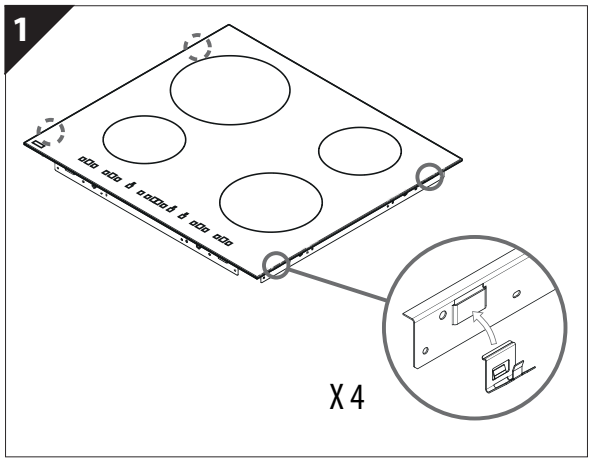
1
X 4

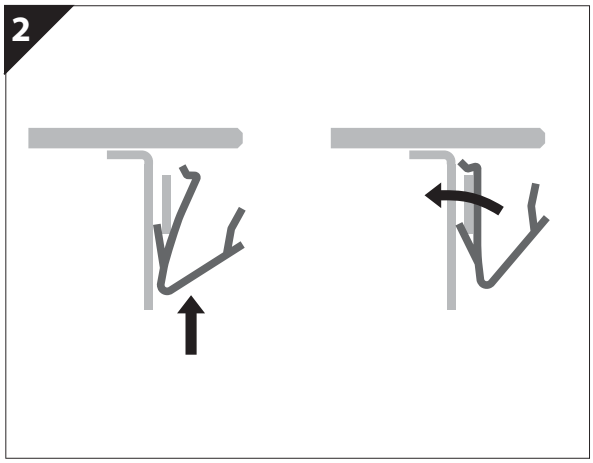
2

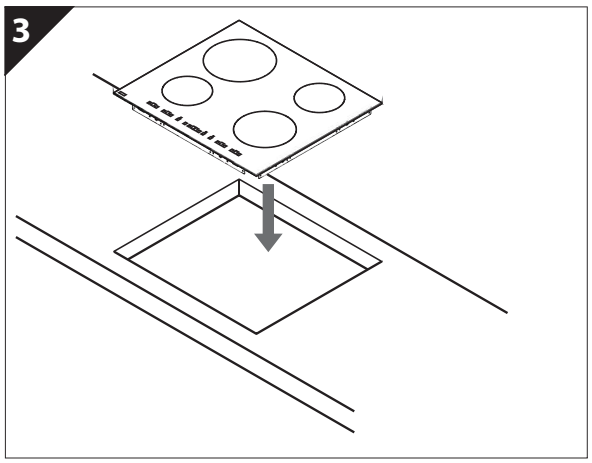
3

IMPORTANT SAFETY INSTRUCTIONS

These instructions shall also be available on website: www.whirlpool.eu

YOUR SAFETY AND THAT OF OTHERS IS VERY IMPORTANT

This manual and the appliance itself provide important safety messages, to be read and always observed.



This is the danger symbol, regarding safety, warning of potential risks to users and others.
All safety messages will be preceded by the danger symbol and the following words:

DANGER **Indicates a hazardous situation which, if not avoided, will result in serious injury.**

WARNING **Indicates a hazardous situation which, if not avoided, could cause serious injury.**

All messages relevant to safety specify the potential risk to which they refer and indicate how to reduce the risk of injury, damage and electric shocks due to incorrect use of the appliance. Make sure to comply with the following:

- Use protective gloves to perform all unpacking and installation operations.
- The appliance must be disconnected from the power supply before carrying out any installation operation.
- Installation and maintenance must be carried out by a specialised technician, in compliance with the manufacturer's instructions and the local safety regulations in force. Do not repair or replace any part of the appliance unless specifically stated in the user manual.
- The appliance must be earthed.
- The power cable must be long enough for connecting the appliance, fitted in the cabinet, to the power supply.
- For installation to comply with the current safety regulations, an omnipolar switch with minimum contact gap of 3mm is required.
- Do not use multi-sockets or extension cords.
- Do not pull the appliance's power cable.
- The electrical parts must not be accessible to the user after installation.
- The appliance is designed solely for domestic use for cooking food. No other use is permitted (e.g. heating rooms). The Manufacturer declines any liability for inappropriate use or incorrect setting of the controls.
- The appliance and its accessible parts become hot during use. Care should be taken to avoid touching heating elements. Very young (0-3 years) and young children (3-8 years) shall be kept away unless continuously supervised.
- Children from 8 years and above and persons with reduced physical, sensory or mental capabilities or lack of experience and knowledge can use this appliance only if they are supervised or have been given instructions on safe appliance use and if they understand the hazards involved. Children shall not play with the appliance. Cleaning and user maintenance shall not be made by children without supervision.

- Do not touch the appliance heating elements during and after use. Do not allow the appliance to come into contact with cloths or other flammable materials until all the components have cooled down completely.
- Do not place flammable materials on or near the appliance.
- Overheated oils and fats catch fire easily. Pay attention when cooking food products rich in fat and oil.
- A separator panel (not supplied) must be installed in the compartment under the appliance.
- If the surface is cracked, switch off the appliance to avoid the possibility of electric shock (only for appliances with glass surface).
- The appliance is not intended to be operated by means of an external timer or separate remote control system.
- Unattended cooking on a hob with fat or oil can be dangerous and may result in fire. NEVER try to extinguish a fire with water, but switch off the appliance and then cover flame e.g. with a lid or a fire blanket.
  Danger of fire: do not store items on the cooking surfaces.
- Do not use steam cleaners.
- Metallic objects such as knives, forks, spoons and lids should not be placed on the hob surface since they can get hot.
- After use, switch off the hob element by its control and do not rely on the pan detector (only for induction appliances).

SAFEGUARDING THE ENVIRONMENT

Disposal of packing

The packing material is 100% recyclable and marked with the recycling symbol (♺). The various parts of the packing must not be dispersed in the environment, but disposed of in compliance with local regulations.

Disposal

This appliance is marked in conformity with European Directive 2012/19/EU on Waste Electrical and Electronic Equipment (WEEE).
By ensuring that this appliance is correctly disposed of, the user can help prevent potentially negative consequences for the environment and the health of people.

The symbol on the appliance or the accompanying documentation indicates that this product should not be treated as domestic waste but must be taken to an appropriate collection point for recycling WEEE.

Energy saving tips

For optimum results, it is advisable to:

- Use pots and pans with bottom width equal to that of the cooking zone.
- Only use flat-bottomed pots and pans.
- When possible, keep pot lids on during cooking.
- Use a pressure cooker to to save even more energy and time.
- Place the pot in the middle of the cooking zone marked on the hob.

DECLARATION OF CONFORMITY CE

- This appliance has been designed, manufactured and marketed in conformity with the safety requirements of "Low Voltage" Directive 2006/95/EC (replacing 73/23/EEC as amended) and protection requirements of "EMC" Directive 2004/108/EC.
- This appliance meets the eco design requirements of European Regulation N. 66/2014, in conformity to the European standard EN 60350-2.

BEFORE USE



IMPORTANT: The cooking zones will not switch on if pots are not the right size. Only use pots bearing the symbol "INDUCTION SYSTEM" (Figure opposite). Place the pot on the required cooking zone before switching the hob on.

EXISTING POTS AND PANS

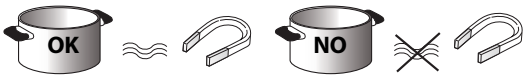

Use a magnet to check if the pot is suitable for the induction hob: pots and pans are unsuitable if not magnetically detectable.

- Make sure pots have a smooth bottom, otherwise they could scratch the hob. Check dishes.
- Never place hot pots or pans on the surface of the hob's control panel. This could result in damage.

RECOMMENDED POT BOTTOM WIDTHS

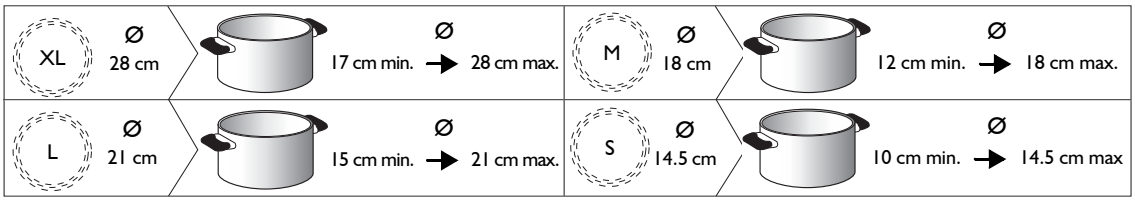

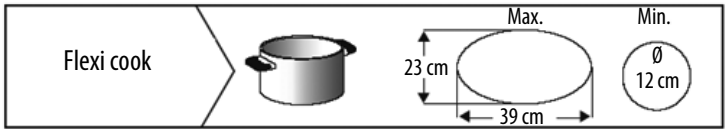

INSTALLATION

After unpacking the product, check for any damage during transport. In case of problems, contact the dealer or the After-Sales Service.
For built-in dimensions and installation instruction, see the pictures in page 2.

PREPARING THE CABINET FOR FITTING

⚠ WARNING

- **Install a separator panel under the hob.**
- **The lower part of the product must not be accessible after installation.**
- **Do not fit the separator panel if an undertop oven is installed.**

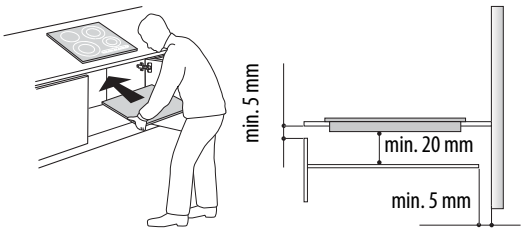

- The distance between the underside of the appliance and the separator panel must respect the dimensions given in the figure.
- In order to ensure the correct operation of the product, do not obstruct the minimum required clearance between the hob and the top of the unit (min. 5 mm).
- If an undertop oven is installed, make sure the oven is equipped with a cooling system.
- Do not install the hob above a dishwasher or washing-machine, so that the electronic circuits do not come into contact with steam or moisture which could damage them.
- In the case of flush-mounted installation, call the After-Sales Service to request assembly of screws kit 4801 211 00112.
- To remove the hob, use a screwdriver (not provided) to prise off the perimeter clips on the underside of the appliance.

ELECTRICAL CONNECTION

⚠ WARNING

- **Disconnect the appliance from the power supply.**
- **Installation must be carried out by qualified personnel who know the current safety and installation regulations.**
- **The manufacturer declines all liability for injury to persons or animals and for damage to property resulting from failure to observe the regulations provided in this chapter.**
- **The power cable must be long enough to allow the hob to be removed from the worktop.**
- **Make sure the voltage specified on the dataplate located on the bottom of the appliance is the same as that of the home.**

Connection to the terminal block

For the electrical connection, use an H05RR-F or H05V2V2-F cable as specified in the table below.

Wires	Number x size
220-240 V ~ + ⏚	3 x 4 mm^2
220-240 V 3 ~ + ⏚	4 x 1.5 mm^2
380-415 V 3N ~ + ⏚	5 x 1.5 mm^2
380-415 V 2N ~ + ⏚	4 x 1.5 mm^2

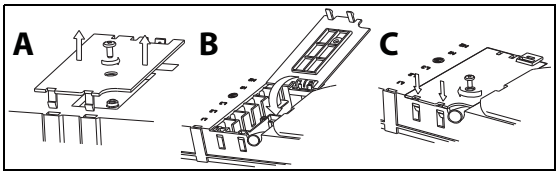

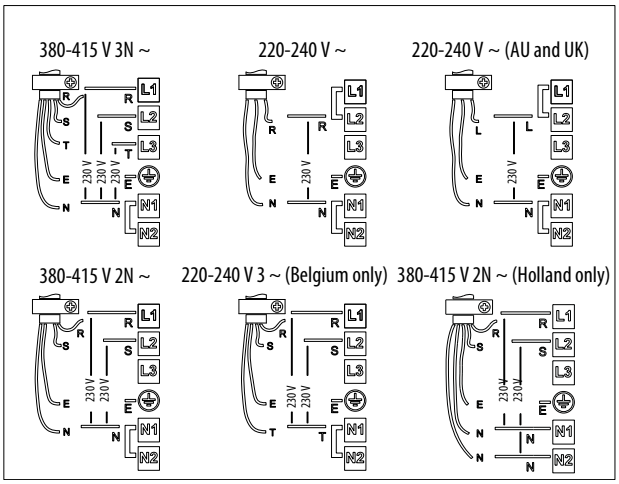

Important:

- Based on the wiring diagram (see figure) either keep or remove the metal jumpers between the screws on the terminal block L1-L2 and N1-N2.
- If the cable is provided, see the connection instructions attached to the cable.
- Make sure all six screws on the terminal block are tightened after connecting the cables.

Example of jumper present (left) or removed (right). See the wiring diagram for details (the jumpers can be between L1-L2 and between N1-N2).



Connect the yellow/green earth wire to the terminal with the symbol ⏚.

This wire must be longer than the other wires.

1. Remove the terminal block cover (A), undoing the screw and inserting the cover in the terminal block hinge (B).
2. Insert the power cable in the cable clamp and connect the wires to the terminal block as indicated in the connection diagram located near it.
3. Secure the power cable with the cable clamp.
4. Close the cover (C) and screw it on the terminal block with the previously removed screw.

Each time the power is connected, the hob performs an automatic check for a few seconds.

If the hob already has a power cable, follow the instructions attached to the cable. Connect the appliance to the power supply by means of a multipole switch with minimum contact gap of 3mm.

INSTRUCTIONS FOR USE

Control Panel Description

Control panel

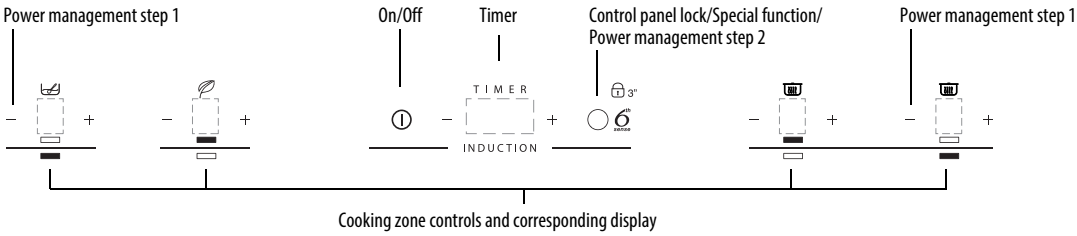

Switching the hob ON/OFF

To switch the hob on, press the ⏻ button for approx. 2 seconds until the cooking zone displays light up. To switch off, press the same button until the displays switch off. All the cooking zones are deactivated

If the hob has been in use, the residual heat indicator "H" remains lit until the cooking zones have cooled down.

If within 10 seconds of switching on, no function is selected, the hob switches off automatically.

Switching on and adjusting cooking zones



Power indicator display

Selected cooking zone indication



Cooking zone positioning

Place the pot on the cooking zone, switching the hob on, activate the required cooking zone by pressing the corresponding "+" button "0" appears on the display. It is possible to select the required power level, from min. 0 to max. 9, or booster "P" if available. To increase the power level, push the "+" button. To decrease the power level push the "-" button.

Deactivation of cooking zones

To switch off the cooking zone, press the corresponding "+" and "-" button for more than 3 seconds.

The cooking zone switches off and, if still hot, the letter "H" appears on the zone display.

Control panel lock

This function locks the controls to prevent accidental activation of the hob. To activate the control panel lock, switch the hob on and press the Timer button for three seconds; an acoustic signal and a luminous indicator near the padlock symbol signal activation. The control panel is locked except for the switching off function. To deactivate the control lock, repeat the activation procedure. The luminous dot goes off and the hob is active again.

The presence of water, liquid spilled from pots or any objects resting on the button below the symbol can accidentally activate or deactivate the control panel lock.

Timer



The timer can be used to set the cooking time for a maximum of 99 minutes (1 hour and 39 minutes) for all the cooking zones.

Select the cooking zone to be used with the timer, press the timer and a beep signals the function (see figure). The display shows "00" and the LED indication comes on. The Timer value can be decreased and increased by keeping the slider function "+" and "-" buttons pressed. When the set time has elapsed, an acoustic signal sounds and the cooking zone switches off automatically. To deactivate the timer, keep the Timer button pressed for at least 3 seconds.

To set the timer for another zone, repeat the above steps. The timer display always shows the timer for the selected zone or the shortest timer.

To modify or deactivate the timer, press the cooking zone selection button for the timer in question.

Control panel warnings.

Special functions (If available)

Some models have special functions:

EcoBooster ◯

With the hob turned on, select the cooking zone with the Eco Booster symbol inside it .

To enable/disable the function, press the button ◯

The EcoBooster function allows the water to be brought to the boil and kept boiling, avoiding spilling, with a reduction of energy consumption.

To optimize this control and ensure the best energy saving, it is advisable to use a pot with bottom width similar to that of the selected cooking zone. The quality of the pot used, the presence or absence of the lid or salt, can affect the performance of the function. 2 to 3 liters of water (preferably at room temperature) is recommended, and it is advisable not to use the lid.

In any case it is advisable to keep a check on the boiling conditions and the amount of residual water.

Automatic function Ⓐ

The function automatically sets a power level suitable for maintaining a low boil. Activate this function after bringing to the boil, pressing the corresponding zone button first and then the button ◯.

Keep Warm

This function automatically sets a power level that keeps just-cooked food hot and serving dishes warm (with induction-suitable accessory).

Press the ◯ key: "A" appears on the display and the indicator light turns on. To deactivate the function, simply press ◯ button.

Simmering

After bringing to the boil, press the key ○ and the hob will automatically set the correct power level to keep the pot simmering. “A” appears on the display: the indicator light lights up. To deactivate the function, simply press ○ button.

Melting

This function maintains a permanently low temperature in the cooking zone. After positioning the pot/accessory on the chosen cooking zone, switch on the hob and select the cooking zone. Press the ○ key: “A” appears on the display and the indicator light turns on. To deactivate the function, simply press ○ button.

Residual heat indicator.

The hob is fitted with a residual heat indicator for each cooking zone. These indicators alert the user when cooking zones are still hot.

If the display shows H, the cooking zone is still hot. If the residual heat indicator of a given cooking zone is lit, that zone can be used, for example, to keep a dish warm or to melt butter.

When the cooking zone cools down, the display goes off.

Incorrect or missing pot indicator.



If you are using a pot that is not suitable, not correctly positioned or not of the correct dimensions for your induction hob, the message “no pot” will appear in the display (see figure at side). If no pot is detected within 60 seconds, the hob switches off.

Fast boil function (Booster)

This function, only present on some cooking zones, makes it possible to exploit the hob’s maximum power (for example to bring water to the boil very quickly).
To activate the function, press the “+” button until “P” appears on the display. After 10 minutes’ use of the booster function, the appliance automatically sets the zone to level 9.

“Power management” (Function where it is available)

Thanks to the “Power management” function, the user can set the maximum power the hob can reach, as required.
This setting is possible at any time and is maintained until the next change.
By setting the required maximum power, the hob automatically adjusts distribution in the various cooking zones, ensuring that this limit is never exceeded; with the advantage of also being able to manage all the zones simultaneously, but without overload problems.
4 maximum power levels are available and showed on display: 2.5 – 4.0 – 6.0 – 7.2 kW (7.2 kW is considered as max power of cooktop)
At the time of purchase, the hob is set to maximum power
After plugging the appliance into the electrical socket, in the first 60 seconds it is possible to set the required power level by running the following points:

Step	Control panel	Display
1	— Press for approximately 3 seconds both Power management button (step 1)	
2	Press the Power Management button (step 2) to confirm the previous step	The display shows PL
3	TIMER – + Press to set the chosen level amongst the different options available	The light comes on together with the in-use lights for the individual cooking zones
4	Press the Power Management button (step 4) to confirm the previous step	The display shows the set level which flashes for approximately 2 seconds; after which the hob emits an acoustic signal and then turns itself off; it is now ready for use

In case of an error when setting the power, the symbol EE appears in the middle and an acoustic signal sounds for about 5 seconds. In this case repeat the configuration procedure from the beginning. If the error occurs again, contact the After-Sales Service.
During normal use, if the user tries to increase the maximum available power level when reached, the level of the zone in use flashes twice and an acoustic signal sounds.
To obtain a higher power in that zone, it is necessary to manually decrease the power level of one or more already active cooking zones.

Activation/deactivation of the acoustic signal

After switching the hob on, press and hold the "-" of the first cooking zone and the external button on the right simultaneously for at least five seconds ("as shown below"). .

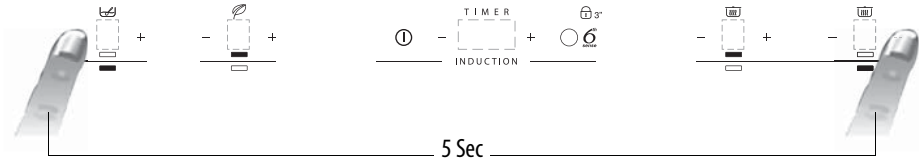

Flexi cook

Where present, this function allows the cooking zone to be used as two separate zones or as a single extra large zone.
It is perfect for oval, rectangular and elongated pans (with maximum base dimensions of 38x23 cm) or more than one standard pan in the same time. In order to activate the flexicook function, switch on the hob, press simultaneously the 2 selecting buttons of the zones as shown in the picture below: the two cooking zone displays show level "0"; both dots next to the level number are lit, indicating that the Flexi cook is activated.

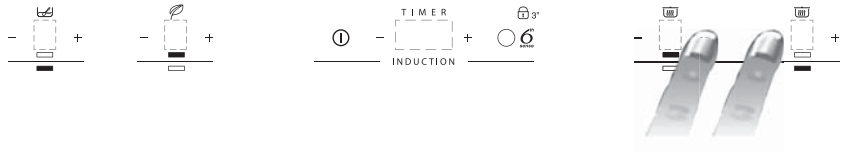

To change the power level (from 1 to max. 9 or P) press the -/+ buttons. To deactivate the Flexi cook function, press simultaneously the 2 selecting buttons of the zones. To switch off the zones instantly, hold one of the zone selection button for 3 seconds.

The message "no pot" will appear on the display of the zone that is not able to detect any pot (because of missing pot, or misplaced or not suitable for induction hob). This message remains active for 60 seconds: in this time you can add or slide pots within the flexicook area as you prefer.

After 60 seconds if no pan is placed on the zone, the system stops "searching" pots on that zone, the symbol remains visible on the display to remind that the zone is disabled.

To reactivate the Flexicook function, press one of the 2 respective buttons

The Flexi cook function is also able to detect when a pot is moved from one zone to the other one within the flexi cook area keeping the same power level of the zone where the pan originally was placed (see the example in the figure below: if the pot is moved from the front heater to the rear heater, the power level will be shown on the display corresponding to the zone where the pot is placed).

It is also possible to operate the Flexi cook area as two independent cooking zones, using the corresponding button of the single zone. Place the pot in the center of the single zone and adjust the power level with the slide touchscreen.

Important: make sure to place the pans centered on the cooking zone in the way to cover the center of the single cooking zone.
In case of big pot, oval, rectangular and elongated pans make sure to place the pans centered on the cooking zone.
Examples of good pot placement and bad pot placement:

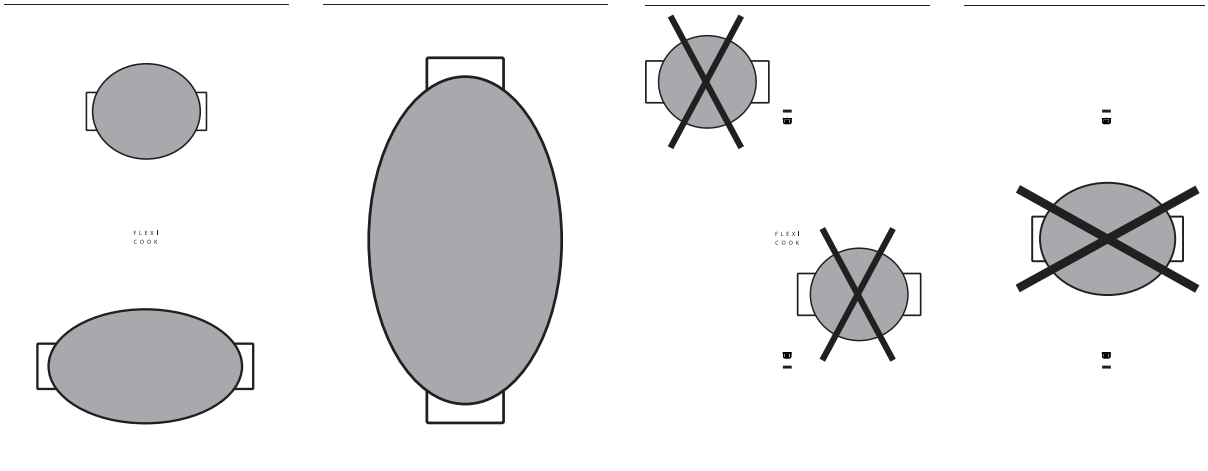

CLEANING

⚠ WARNING

- **Do not use steam cleaners.**
- **Before cleaning, make sure the cooking zones are switched off and that the residual heat indicator ("H") is not displayed.**

If your glass has the iXelium™ logo, your hob is equipped with iXelium™ treatment. iXelium™ is the exclusive Whirlpool finishing that guarantees a perfect clean and a long-lasting brilliance. Therefore, **if you have a IXELIUM hob, we strongly suggest to observe the following cleaning recommendations:**

- Use a soft cloth (microfibre is best) dampened with water or with everyday glass cleaning detergent.
- If you want to enhance furtherly cleaning results, just let the glass in contact with a wet cloth for couple of minutes.

IMPORTANT: Do not use abrasive sponges or scouring pads. Their use could eventually ruin the glass.

- After each use, clean the hob (when it is cool) to remove any deposits and stains due to food residuals.
- Sugar or foods with a high sugar content damage the hob and must be immediately removed.
- Salt, sugar and sand could scratch the glass surface.
- Use a soft cloth, absorbent kitchen paper or a specific hob cleaner (follow the Manufacturer's instructions).
- Liquid splillages on the cooking zones may make pan vibrate or move
- Dry the hob thoroughly after cleaning it.

TROUBLESHOOTING GUIDE

- Read and follow the instructions given in the section "Instructions for use".
- Check that the electricity supply has not been shut off.
- Dry the hob thoroughly after cleaning it.
- If, when the hob is switched on, alphanumeric codes appear on the display, consult the following table for instructions.
- If the hob cannot be switched off after using it, disconnect it from the power supply.

ERROR CODE	DESCRIPTION	POSSIBLE CAUSES	ERROR ELIMINATION
C81, C82	The control panel switches off because of excessively high temperatures	The internal temperature of electronic parts is too high	Wait for the hob to cool down before using it again.
F42 or F43	The connection voltage is wrong	The sensor detects a discrepancy between the appliance voltage and that of the mains supply	Disconnect the hob from the mains and check the electrical connection
F12, F21, F25, F36, F37, F40, F47, F56, F58, F60	Call the After-Sales Service and specify the error code		

NOISES MADE BY THE HOB

Induction hobs can make whistling or crackling sounds during normal operation, these actually come from the pots and pans as a result of the characteristics of the bottoms (for example, bottoms made of several layers of material, or uneven bottoms). These noises vary depending on the pots and pans used and the amount of food they contain, and are not indicative of a defect of any kind.

In addition, the induction hob is equipped with an internal cooling system to control the temperature of electronic parts; as a result, during operation and for several minutes after the hob has been switched off, the noise of the cooling fan will be audible. This is perfectly normal and indeed essential for proper functioning of the appliance.

AFTER-SALES SERVICE

Before contacting the After-sales Service:

1. See if you can solve the problem yourself with the help of the "Troubleshooting guide".
2. Switch the appliance off and then on again it to see if the problem has been eliminated.

If the problem persists after the above checks, contact the nearest After-Sales Service.

Always specify:

- a brief description of the fault;
- the product type and exact model;
- the Service number (the number after the word Service on the rating plate), located under the appliance (on the metal plate).
- your full address;
- your telephone number.

SERVICE 0000 000 00000

If any repairs are required, contact an **authorised After-Sales Service Centre** (to ensure the use of original spare parts and correct repairs). Spare parts are available for 10 years.

POWER LEVEL TABLE

Power level		Type of cooking	Level use (indicating cooking experience and habits)
Max. power	**Boost**	Fast heating	Ideal for rapidly increasing the temperature of food to fast boiling in the case of water or rapidly heating cooking liquids
	8-9	Frying - boiling	Ideal for browning, starting to cook, frying deep frozen products, fast boiling
High power	**7-8**	Browning - sautéing - boiling - grilling	Ideal for sautéing, maintaining a lively boil, cooking and grilling (for a short period of time, 5-10 minutes)
	6-7	Browning - cooking - stewing - sautéing - grilling	Ideal for sautéing, maintaining a light boil, cooking and grilling (for a medium period of time, 10-20 minutes), preheating accessories
Medium power	**4-5**	Cooking - stewing - sautéing - grilling	Ideal for stewing, maintaining a gentle boil, cooking (for a long period of time). Creaming pasta
	3-4	Cooking - simmering - thickening - creaming	Ideal for long-cooking recipes (rice, sauces, roasts, fish) with liquids (e.g. water, wines, broth, milk), creaming pasta
	2-3		Ideal for long-cooking recipes (less than a litre in volume: rice, sauces, roasts, fish) with liquids (e.g. water, wines, broth, milk)
Low power	**1-2**	Melting - defrosting - keeping food warm - creaming	Ideal for softening butter, gently melting chocolate, thawing small products and keeping just-cooked food warm (e.g. sauces, soups, minestrone)
	1		Ideal for keeping just-cooked food warm, for creaming risottos and for keeping serving dishes warm (with induction-suitable accessory)
OFF	**Zero power**	Support surface	Hob in stand-by or off mode (possible end-of-cooking residual heat, indicated by an "H")

NOTE:
When making quick-cook foods that require perfect heat distribution (e.g. pancakes) on the 28 cm double cooking zone (where present), use pans no greater than 24 cm in diameter. For delicate cooking (for example, melting chocolate or butter) use the smaller diameter single zones.

WHIRLPOOL EUROPE s.r.l. – Viale Guido Borghi, 27 –
21025 COMERIO (Varese) ITALY

Виерлпул Юроп с.р.л. – Виале Гвидо Борги, 27 –
21025, Комерио (Варезе) ИТАЛИЯ

Вірпул Юроп с.р.л. – Віалє Г. Боргі, 27,
21025 – Комеріо (Варезе), Італія

Factory: Whirlpool Europe S.r.l.
Address: (21024) Biandronno Loc. Cassinetta (VA) – Italy

Завод: Виерлпул Юроп с.р.л.
Адрес: (21024) Бьяндронно Лок. Кассинетта (ВА) – Италия

Зауыт: Виерлпул Юроп с.р.л.
Мекен-жайы: (21024) Бьяндронно Лок. Кассинетта (ВА) –
Италия

Завод: Вірлпул Юроп с.р.л.
Адреса: (21024) Бьяндронно Лок. Кассінетта (ВА) – Італія

For Russia and CU countries:
Whirlpool CIS LLC
117105, Moscow, 9 Varshavskoe highway,
build. 1B, 3rd Floor.
Call center in Russia: 8-800-100-57-31

Для России и стран Таможенного союза:
ООО «Виерлпул Си-Ай-Эс»
117105, г. Москва, Варшавское шоссе,
дом 9, стр.1Б, 3 эт.
Телефон горячей линии в РФ: 8-800-100-57-31

Ресей және Кедендік одақ елдері үшін:
«Виерлпул Си-Ай-Эс» ЖШҚ
117105, Мәскеу қаласы, Варшава тасжолы,
9-үй, 1Б-құрылыс, 3-қабат.
Ресей Федерациясындағы жедел желі телефоны: 8-800-100-57-31

For Ukraine:
"Whirlpool Ukraine" LLC
01601, Kyiv, ul.Shelkovichnaya, 42-44.
Hot Line in Ukraine: 0-800-501-15-00

Для України:
ТОВ «Вірлпул Україна»
01601, м. Київ, вул. Шовковична, 42-44.
Телефон гарячої лінії в Україні: 0-800-501-15-00

Whirlpool® Registered trademark/TM Trademark of Whirlpool, USA © Copyright Whirlpool Europe s.r.l. 2014. All rights reserved - http://www.whirlpool.eu

400010788924

EN DE FR NL IT PT GR SR SL KZ HR
LV LT ET PL CZ SK HU RU BG RO UA AR

03/15