LG
Life's Good

MUSIC flow P5

Portable Bluetooth Speaker

Please read this manual carefully before operating your set and retain it for future reference.

MODELS

NP5550W
NP5550WO
NP5550WL
NP5550B
NP5550BR
NP5550WG

MFL69383513

www.lg.com

Safety Information



CAUTION: TO REDUCE THE RISK OF ELECTRIC SHOCK DO NOT REMOVE COVER (OR BACK) NO USER-SERVICEABLE PARTS INSIDE REFER SERVICING TO QUALIFIED SERVICE PERSONNEL.



This lightning flash with arrowhead symbol within an equilateral triangle is intended to alert the user to the presence of uninsulated dangerous voltage within the product's enclosure that may be of sufficient magnitude to constitute a risk of electric shock to persons.



The exclamation point within an equilateral triangle is intended to alert the user to the presence of important operating and maintenance (servicing) instructions in the literature accompanying the product.

WARNING: TO PREVENT FIRE OR ELECTRIC SHOCK HAZARD, DO NOT EXPOSE THIS PRODUCT TO RAIN OR MOISTURE.

WARNING: Do not install this equipment in a confined space such as a book case or similar unit.

CAUTION: Do not use high voltage products around this product. (ex. Electrical swatter) This product may malfunction due to electrical shock.

WARNING: This unit contains magnets which can be harmful to some kind of object (Ex : Magnetic card, Pacemaker etc..).

This product contains chemicals known to the State of California to cause cancer and birth defects or other reproductive harm. ***Wash hands after handling.***

CAUTION: Do not block any ventilation openings. Install in accordance with the manufacturer's instructions.
Slots and openings in the cabinet are provided for ventilation and to ensure reliable operation of the product and to protect it from over heating. The openings shall be never be blocked by placing the product on a bed, sofa, rug or other similar surface. This product shall not be placed in a built-in installation such as a bookcase or rack unless proper ventilation is provided or the manufacturer's instruction has been adhered to.

CAUTION concerning the Power Cord

Check the specification page of this owner's manual to be certain of the current requirements of this device. Do not overload wall outlets. Overloaded wall outlets, loose or damaged wall outlets, extension cords, frayed power cords, or damaged or cracked wire insulation are dangerous. Any of these conditions could result in electric shock or fire. Periodically examine the cord of your device, and if its appearance indicates damage or deterioration, unplug it, discontinue use of the device, and have the cord replaced with an exact replacement part by an authorized service centre. Protect the power cord from physical or mechanical abuse, such as being twisted, kinked, pinched, closed in a door, or walked upon. Pay particular attention to plugs, wall outlets, and the point where the cord exits the device. The Power Plug is the disconnecting device. In case of an emergency, the Power Plug must remain readily accessible.

CAUTION when using this product in environments of low humidity

- It may cause static electricity in environments of low humidity.
- It is recommended to use this product after touching any metal object which conducts electricity.

This device is equipped with a portable battery or accumulator.

Removing the battery from this equipment Safely:
To remove the old battery, follow the steps in reverse order from assembly. To prevent contamination of the environment or possibly threaten human and/or animal health, the old battery must be put in an appropriate container at designated collection points. Do not dispose of batteries together with other waste. It is recommended that you use local or free reimbursement systems batteries. The batteries shall not be exposed to excessive heat such as sunshine, fire or the like.
Do not remove battery incorporated with product for your safety. If you need to replace the battery, take it to the nearest authorized LG Electronics service point or dealer for assistance.

CAUTION: The apparatus should not be exposed to water (dripping or splashing) and no objects filled with liquids, such as vases, should be placed on the apparatus.

IMPORTANT SAFETY INSTRUCTIONS

1. Read these instructions.
2. Keep these instructions.
3. Heed all warnings.
4. Follow all instructions.
5. Do not use this apparatus near water.
6. Clean only with dry cloth.
7. Do not block any ventilation openings. Install in accordance with the manufacturer's instructions.
8. Do not install near any heat sources such as radiators, heat registers, stoves, or other apparatus (including amplifiers) that produce heat.
9. Do not defeat the safety purpose of the polarized or grounding-type plug. A polarized plug has two blades with one wider than the other. A grounding type plug has two blades and a third grounding prong. The wide blade or the third prong are provided for your safety. If the provided plug does not fit into your outlet, consult an electrician for replacement of the obsolete outlet.
10. Protect the power cord from being walked on or pinched particularly at plugs, convenience receptacles, and the point where they exit from the apparatus.
11. Only use attachments/accessories specified by the manufacturer.
12. Use only with the cart, stand, tripod, bracket, or table specified by the manufacturer, or sold with the apparatus. When a cart is used, use caution when moving the cart/apparatus combination to avoid injury from tip-over.



13. Unplug this apparatus during lightning storms or when unused for long periods of time.
14. Refer all servicing to qualified service personnel. Servicing is required when the apparatus has been damaged in any way, such as power-supply cord or plug is damaged, liquid has been spilled or objects have fallen into the apparatus, the apparatus has been exposed to rain or moisture, does not operate normally, or has been dropped.

FCC Compliance Statement

This device complies with part 15 of the FCC rules. Operation is subject to the following two conditions:

(1) This device may not cause harmful interference, and

(2) This device must accept any interference received, including interference that may cause undesired operation.

NOTE: This equipment has been tested and found to comply with the limits for a Class B digital device, pursuant to Part 15 of the FCC Rules. These limits are designed to provide reasonable protection against harmful interference in a residential installation. This equipment generates, uses, and can radiate radio frequency energy and, if not installed and used in accordance with the instructions, may cause harmful interference to radio communications. However, there is no guarantee that interference will not occur in a particular installation.
If this equipment does cause harmful interference to radio or television reception, which can be determined by turning the equipment off and on, the user is encouraged to try to correct the interference by one or more of the following measures:

- Reorient or relocate the receiving antenna.
- Increase the separation between the equipment and receiver.
- Connect the equipment into an outlet on a circuit different from that to which the receiver is connected.
- Consult the dealer or an experienced radio/TV technician for help.

CAUTION: Any changes or modifications not expressly approved by the party responsible for compliance could void the user's authority to operate this equipment.

FCC WARNING: This equipment may generate or use radio frequency energy. Changes or modifications to this equipment may cause harmful interference unless the modifications are expressly approved in the instruction manual. The user could lose the authority to operate this equipment if an unauthorized change or modification is made.

FCC RF Radiation Exposure Statement : This equipment complies with FCC radiation exposure limits set forth for an uncontrolled environment. This transmitter must not be co-located or operating in conjunction with any other antenna or transmitter. This equipment should be installed and operated with minimum distance 20 cm (7.8 inches) between the antenna and your body. Users must follow the specific operating instructions for satisfying RF exposure compliance.

CAUTION: Regulations of the FCC and FAA prohibit airborne operation of radio-frequency wireless devices because their signals could interfere with critical aircraft instruments.

Responsible Party:

LG Electronics USA, Inc.1000 Sylvan Avenue
Englewood Cliffs, NJ 07632
TEL. : +1-800-243-0000

Table of Contents

1 Getting Started

3 Safety Information
5 IMPORTANT SAFETY INSTRUCTIONS
8 Main Features
8 Accessories
8 Introduction
9 Main Unit
10 Charging the Unit
10 – Connecting the AC adapter
10 – Checking the charging status
11 Using BLUETOOTH App
11 – Install "Music Flow Bluetooth" App onto Your BLUETOOTH Device
11 – Activate BLUETOOTH with "Music Flow Bluetooth" App

2 Operating

13 Basic Operations
13 – Using power button
13 – Using volume button
13 – Simple Operation Guide
14 Using BLUETOOTH® technology
14 – Listening to music stored on the BLUETOOTH devices
16 Dual Play Connection (Optional)
16 – Dual Play Auto Connection
17 LG Sound Sync (TV Private Sound)
17 – With wireless connection
18 Listening to Music from Your External Device
18 Other Operation
18 – Resetting
18 – Notice for Auto Power Off

3 Troubleshooting

19 Troubleshooting
19 – General

4 Appendix

20 About LED indicator
21 Trademarks and Licenses
21 Handling the Unit
22 Specifications

Main Features

Portable In

Listens to music from your portable device.

LG Sound Sync

Controls volume level of this unit by the remote control of your LG TV that is compatible with LG Sound Sync.

Music Flow Bluetooth

You can control this unit with your iPod touch/ iPhone/iPad or Android device via **Bluetooth**. This unit and your device must be paired for **Bluetooth**. Visit "Apple App Store" or "Google Android Market (Google Play Store)" or use the QR code shown below to search for "Music Flow Bluetooth" app. For detailed information, refer to page 11.

(iOS) (Android)

Dual Play

You can enjoy the sound in stereo by using two speakers. When using this function, it needs two speakers.

Accessories

Please check and identify the supplied accessories.

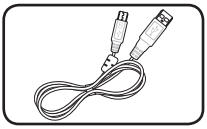

USB cable (1)

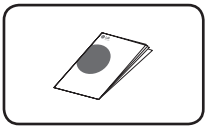

Simple Manual (1)

Introduction

Symbol used in this manual

Note

Indicates special notes and operating features.

Caution

Indicates cautions for preventing possible damages from abuse.

Main Unit

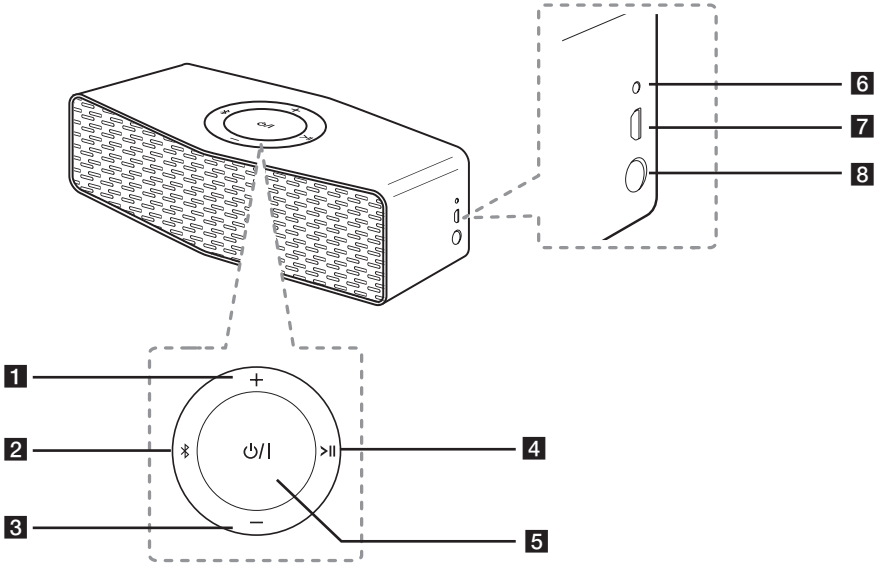

1 + : Turn up the volume.

2 ✱
- Connects a **Bluetooth** device to the unit. (Press ✱)
- Adds a **Bluetooth** device for multi pairing. (Press and hold ✱)
- Changes to **Bluetooth** mode in portable mode. (Press ✱)

3 — : Turn down the volume

4 >II
- Starts or pauses playback on the **Bluetooth** mode.
- Mutes the sound on the Portable and LG Sound Sync mode.

5 ⏻/I
Turns On / Off : Press and hold it.

6 Battery indicator

7 USB port for charging

8 Portable In connector
Listens to music from your portable device.

Charging the Unit

Connecting the AC adapter

This device uses built-in battery. Before using it, charge the battery by connecting the AC Adapter.

1. Connect the supplied USB cable to the AC adapter.
2. Connect the USB cable to USB port of of the unit.
3. Plug the AC adapter into an AC outlet.

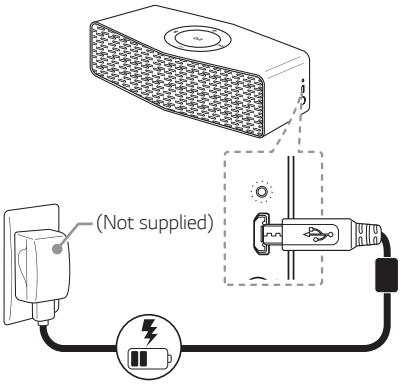

If the battery is fully charged in charging mode, the indicator is changed from red to green.

Caution

AC adapter is not supplied.
It is recommended that you use the 5 V AC adapter approved by LG Electronics Inc. (more than 1.8 A) with this speaker because of danger of explosion. If you do not use the recommended adapter, charging is unavailable or charging time may differ.

Checking the charging status

When AC Adapter is connected, battery charging is started. If the power turned on, you can check the charging status by pressing ⏻/I button.

White ➡ ⏻/I	≧ 60 %
Amber ➡ ⏻/I	≧ 15 %
Amber ⇄ ⏻/I	< 15 %

Note

- Operating time is approx. 15 hours.
  It may vary depending on the battery status and operational conditions.
- If listening to music while charging, it will take longer to charge.

Using BLUETOOTH App

About “Music Flow Bluetooth” App

“Music Flow Bluetooth” app brings a suite of new features to this unit.

To enjoy more features and use this unit more comfortably, you are recommended to download and install free “Music Flow Bluetooth” app.

Install “Music Flow Bluetooth” App onto Your BLUETOOTH Device

There are two ways to install “Music Flow Bluetooth” App onto Your **Bluetooth** Device.

Install “Music Flow Bluetooth” App through QR code

1. Install “Music Flow Bluetooth” app through QR code. Use the scanning software to scan the QR code.
2. Tap an icon for installation.
3. Tap an icon for downloading.

Note

- Make sure that your **Bluetooth** device is connected to the Internet.
- Make sure that your **Bluetooth** device has a scanning software application. If you don’t have one, download one from “App Store” or “Google Play Store”.
- Depending on the region, QR code may not work.

Install “Music Flow Bluetooth” App through “App Store” or “Google Play Store”

1. Tap the “App Store” icon or “Google Play Store” icon.
2. In the search bar, type in “Music Flow Bluetooth” and then search for the app.
3. In the search result list, find and tap “Music Flow Bluetooth” to start downloading **Bluetooth** app.
4. Tap the icon for installation.
5. Tap the icon for downloading.

Activate BLUETOOTH with “Music Flow Bluetooth” App

“Music Flow Bluetooth” app helps to connect your **Bluetooth** device to this unit.

1. Tap “Music Flow Bluetooth” app icon on the home screen to open “Music Flow Bluetooth” app, and go to the main menu.
2. Tap [Menu] and select the unit you want.
3. If you want to get more information to operate, tap [Setting] and refer to the [Help].

Note

- Music Flow Bluetooth app will be available in version of the software as follow;
  Android O/S : Ver 4.0.3 (or later)
  iOS O/S : Ver 6.0 (or later)
- Depending on the **Bluetooth** device, "Music Flow Bluetooth" app may not work.
- After connection of "Music Flow Bluetooth" app, music may be output from your device. In this case, try connecting procedure again.
- If you operate the other applications or change the settings on your **Bluetooth** device while using "Music Flow Bluetooth" app, "Music Flow Bluetooth" app may operate abnormally.
- When "Music Flow Bluetooth" app operates abnormally, check your **Bluetooth** device and the connection of the "Music Flow Bluetooth" app and then try to connect again.
- Depending on the operating system of smart device, you have some differences for "Music Flow Bluetooth" operation.
- Even though **Bluetooth** connection will be disconnected, you can use "Music Flow Bluetooth" app when you change the function.

Basic Operations

Using power button

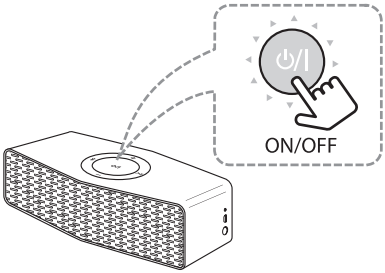

Power On / Off

Press and hold the ⏻ / ❙ button.

Using volume button

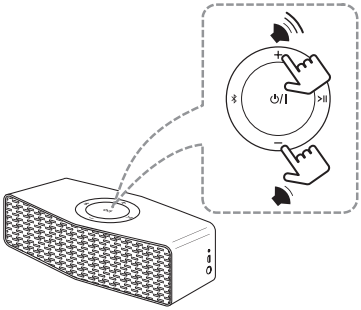

You can adjust speaker volume.

Note

While adjusting volume if you try to increase or decrease the volume when it is already at maximum or minimum level, a beep is played on the unit.

Simple Operation Guide

Function	How to	LED and Sound Status
Power On / Off	Press and hold the ⏻ / ❙ button.	⏻ / ❙ button blinks twice with the sound.
Bluetooth pairing	When ✱ button blinks in white, select LG Music Flow P5 (XX) from device list on your smart device.	✱ button stays in white with the sound.
Play / Pause	Press >II.	-
Volume control	Press + or —.	-
Forward skip	Press >II twice.	-
Backward skip	Press >II three times.	-
Multi pairing	Press and hold ✱ for 2 seconds to add another **Bluetooth** device.	✱ button stays in white with the sound.
Initializing	Press and hold ✱ for 10 seconds.	✱, ⏻ / ❙ and >II buttons blink twice and then ✱ button blinks in white.

Using BLUETOOTH® technology

About BLUETOOTH

Bluetooth is wireless communication technology for short range connection.

The sound may be interrupted when the connection interfered by the other electronic wave or you connect the **Bluetooth** in the other rooms.

Connecting individual devices under **Bluetooth** wireless technology does not incur any charges. A mobile phone with **Bluetooth** wireless technology can be operated via the Cascade if the connection was made via **Bluetooth** wireless technology.

Available Devices : Mobile phone, MP3, Laptop, PDA etc.

BLUETOOTH Profiles

In order to use **Bluetooth** wireless technology, devices must be able to interpret certain profiles.This unit is compatible with following profile.

- A2DP (Advanced Audio Distribution Profile)
- Codec : SBC, AAC

Listening to music stored on the BLUETOOTH devices

Pairing your unit and BLUETOOTH device

Before you start the pairing procedure, make sure the **Bluetooth** feature is turned on in to your **Bluetooth** device. Refer to your **Bluetooth** device's user guide. Once a pairing operation is performed, it does not need to be performed again.

1. Turn on the unit then ✱ button blinks in white.
2. Operate the **Bluetooth** device and perform the pairing operation. When searching for this unit with the **Bluetooth** device, a list of the devices found may appear in the **Bluetooth** device display depending on the type of **Bluetooth** device. Your unit appears as "LG Music Flow P5(xx)".
3. Select "LG Music Flow P5(xx)".

Note

- XX means the last two digits of **Bluetooth** address. For example, if your unit has a **Bluetooth** address such as 9C:02:98:4A:F7:08, you will see "LG Music Flow P5 (08)" on your **Bluetooth** device.
- Depending on the **Bluetooth** device type, some device have a different pairing way. Enter the PIN code (0000) as needed.
- You can connect this unit with up to 2 **Bluetooth** devices simultaneously. Use the same method as described above.
- The multi pairing connection is only supported on Android or iOS devices. (Multi pairing connection may not be supported depending on the connected device specifications.)
- Removable/detachable **Bluetooth** device (Ex : Dongle etc..) doesn't support multi pairing.

4. When this unit is successfully connected with your **Bluetooth** device, blinking buttons will stay white with beep sound.
5. Listen to music.
   To play music stored on your **Bluetooth** device, refer to your **Bluetooth** device's user guide.

Note

- When using **Bluetooth** technology, you have to make a connection between the unit and the **Bluetooth** device as close as possible and keep the distance.
  However you may experience issues in the cases below :
  - There is a obstacle between the unit and the **Bluetooth** device.
  - There is a device using the same frequency with **Bluetooth** technology such as a medical equipment, a microwave or a wireless LAN device.
- You should connect your **Bluetooth** device to this unit again when you restart it.
- If this unit is connected to 2 **Bluetooth** devices, you can play and control music by using only one of the connected devices.
- The sound may be interrupted when the connection has interference from other electronic devices.
- You may not control the **Bluetooth** device with the unit except for Pause and Play.
- Depending on the type of the device, you may not be able to use the **Bluetooth** function.
- You can enjoy wireless system using phone, MP3, laptop, etc..
- The more distance between the unit and the **Bluetooth** device, the lower the sound quality becomes.
- **Bluetooth** connection will be disconnected when the unit is turned off or the **Bluetooth** device gets too far from the unit.
- When **Bluetooth** connection is disconnected, connect the **Bluetooth** device to the unit again.
- When you connect a **Bluetooth** device (iOS device etc.) to this unit or operate the device, the volume level will be synchronized with each other.
- Audio only plays on you Android device. Check you Bluetooth Settings, Shared devices; LG Music FLow P5 (xx), make sure under profiles “Media Audio” is checked.

Dual Play Connection (Optional)

You can enjoy the sound in stereo by using two speakers. Two speakers are needed to enjoy in stereo.

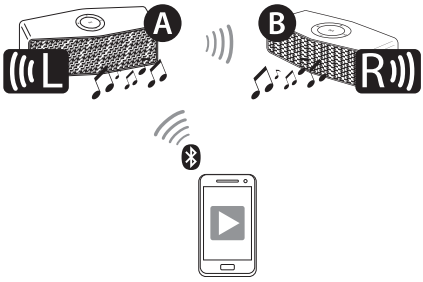

1. Connect the Ⓐ speaker to a **Bluetooth** device.
2. Press and hold both speaker's buttons as indicated below at the same time.
   - Ⓐ speaker : ᛒ, + button
   - Ⓑ speaker : ᛒ, — button
   - Beep sound is heard and ᛒ buttons will blink white fast.
3. If two speakers are connected, blinking ᛒ buttons will stay white with beep sound. If the units fail to detect, go to step 1 and try again.

Dual Play Auto Connection

If you turn the power off and then on again in dual play mode, these speakers keep the dual play mode automatically.

- Turn on the two speakers and wait to complete the dual play connection.
- It takes up to 30 seconds to connect to dual play.

Note

- If you use a **Bluetooth** device using dongle, you cannot use Dual Play.
- In portable input mode, you cannot use Dual Play.
- When you enjoy Dual Play, the multi pairing connection is not supported.
- When Dual Play connection is established, you cannot search the units on other **Bluetooth** devices.
- When you disconnect Dual Play connection, press and hold the buttons of one of the two speakers again. (ᛒ, + or ᛒ, —)
- When you enjoy Dual Play, you can adjust the volume of both Ⓐ and Ⓑ speakers at the same time.
- Once two speakers are connected to each other via Dual play, all devices connected to both speakers are disconnected except for the device that was last connected to Ⓐ speaker.
- Using Dual play is limited to only these units and is unavailable on other Music Flow series.
- To change the **Bluetooth** device in Dual Play mode, press and hold ᛒ for 2 seconds to disconnect current **Bluetooth** device and connect the desired **Bluetooth** device.
- In Dual Play mode, you can connect only the Ⓐ speaker with the **Bluetooth** device.
- Dual Play is only supported on Android or iOS devices.
- When you connect a **Bluetooth** device (iOS device etc.) to this unit or operate the device, the volume level will be synchronized with each other.
- In Dual Play mode, make the distance between the two speakers as close as possible.
- Depending on network environment, the Dual Play may not work well.

LG Sound Sync (TV Private Sound)



You can control some functions of this unit by your TV's remote control with LG Sound Sync. The Feature is only compatible with LG TV's that support LG Sound Sync. Make sure of the LG Sound Sync logo is on your TV.

Controllable function by LG TV's remote control : Volume up/down, mute

Refer to the TV's instruction manual for the details of LG Sound Sync.

Make one of the following connections, depending on the capabilities of your equipment.

Note

- When the connection fails, make sure of the condition of the TV and power.
- Make sure of the condition of this unit and the connection in the cases below when using LG Sound Sync.
  - Turn off the unit.
  - Changing to another function.
  - Disconnecting the wireless connection caused by interference or to much distance.
- The amount of time to turn off this unit is different depending on your TV when you set AUTO POWER function to ON.
- Details of the TV's setting menu may vary depending on the model of your TV.

With wireless connection

1. Turn on the unit by pressing ⏻/I (Power).
2. Set up the sound output of TV to listen to the sound through this unit :
   TV setting menu → [Sound] → [TV Sound output] → [LG Sound Sync (Wireless)]
3. Press and hold ᛒ, ▶II simultaneously until you hear a beep. ᛒ blinks amber. If connected, ᛒ stay in amber.

Note

- If you turn off the TV, LG Sound Sync (Wireless) will be disconnected. To use this function again, you should reconnect the TV and the unit.
- You can mute the sound by pressing ▶II.

Listening to Music from Your External Device

The unit can be used to listen to the music from many types of external device.

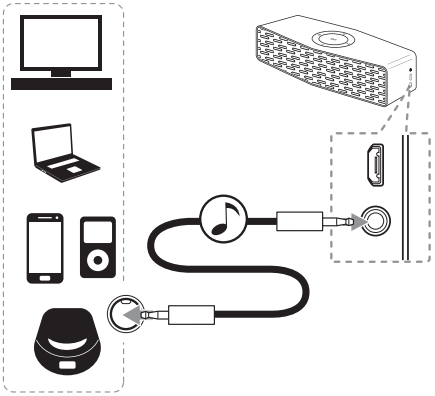

1. Connect the external device to the Portable In connector of the unit.
2. Turn the power on by pressing and holding ⏻ / I button.
3. Turn the external device on and start playing.

Note

- When you connect the portable cable, the function is changed to portable in mode automatically.
- You can mute the sound by pressing >II.

Other Operation

Resetting

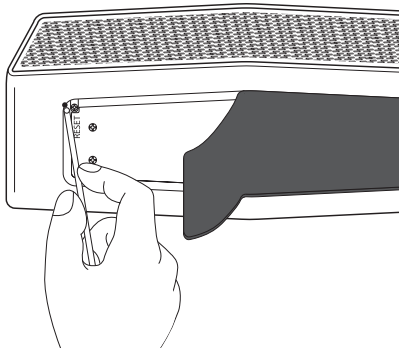

In case the unit freezes due to a malfunction, remove the rubber sleeve and press the reset hole using an object like a thin pin. Then the unit is turned off completely.

Notice for Auto Power Off

When the unit is in BT/LG Sound Sync mode without music playback for 20 minutes or in portable input mode without button operation for 6 hours, this unit is turned off automatically.

Troubleshooting

General

Problem	Cause & Correction
No Power.	• The battery is discharged. Recharge the battery. • Connect the unit to the power supply with the AC adapter.
No sound or sound distortion.	• The unit or your smart device's volume is set to minimum. Check and adjust the volume of the unit or **Bluetooth** device's volume. • When you use an external device at high volume, the sound quality may be deteriorated. Lower the volume of the devices. • If you use the unit for purposes other than listening to music, the sound quality may be lowered or the unit may not work properly.
Bluetooth pairing does not work well.	• Switch **Bluetooth** off and on again on your **Bluetooth** device, then try pairing again. • Be sure your **Bluetooth** device is on. • Remove the obstacle in the path of the **Bluetooth** device and the unit. • Depending on the type of the **Bluetooth** device or surrounding environment, your device may not be paired with the unit. • While using **Bluetooth**, you may not activate the "Music Flow Bluetooth" app. Disconnect the **Bluetooth** device you have connected before you can use the "Music Flow Bluetooth" app properly. • When your **Bluetooth** device has already been connected with another unit, disconnect the **Bluetooth** connection first. Then you can control your unit through the "Music Flow Bluetooth" app. • Depending upon the **Bluetooth** device, the "Music Flow Bluetooth" app may work restrictively. • The connection you've made may be disconnected if you select another application or change the setting of the connected device via "Music Flow Bluetooth" app. In such case, please check the connection status.
The unit does not operate normally.	• If the battery was fully discharged, the stored **Bluetooth** information can be deleted. Previous setting may not be saved when the unit's power is shut off. • In case of malfunction, Battery indicator is lit in white and amber alternately. Please use the unit in proper place where the temperature or humidity is not so high or low. • In case of overload, all LED indicators stay white. Please turn the power off and then on again.
Above solutions do not work.	• Press Reset hole with a pointed thing like mechanical pencil.

About LED indicator

General

Battery indicator turns from red to green.	In Charging ➡ Fully Charged
⏻ / ❙ blinks in white with the sound.	Power is turned on.
⏻ / ❙ blinks in amber with the sound.	Battery is discharged. (Blinks rapidly)
Battery indicator blinks in red and green rapidly.	The unit operates abnormally. Leave the unit at room temperature (5 - 35 °C) for a while and try again.

Bluetooth

ᛒ blinks or stays in white with the sound.	**Blink :** Searching for **Bluetooth** device **Stay on : Bluetooth** device is connected.

Dual Play & Sound Sync

ᛒ blinks fast in white with the sound. (ᛒ on the two speakers)	Waiting for dual play connection
ᛒ, blinks in amber with the sound.	Waiting for sound sync

Dual Play & Sound Sync

>II blinks in white.	Mute Status (Portable)

Trademarks and Licenses

Bluetooth wireless technology is a system which allows radio contact between electronic devices within a max. range of 10 meters.

Connecting individual devices under **Bluetooth** wireless technology does not incur any charges. A mobile phone with **Bluetooth** wireless technology can be operated via the Cascade if the connection was made via **Bluetooth** wireless technology.

The **Bluetooth** word mark and logos are owned by the Bluetooth SIG, Inc. and any use of such marks by LG Electronics is under license.

Other trademarks and trade names are those of their respective owners.

Handling the Unit

When shipping the unit

Please save the original shipping carton and packing materials. If you need to ship the unit, for maximum protection, re-pack the unit as it was originally packed at the factory.

Keeping the exterior surfaces clean

- Do not use volatile liquids such as insecticide spray near the unit.
- Wiping with strong pressure may damage the surface.
- Do not leave rubber or plastic products in contact with the unit for a long period of time.

Cleaning the unit

To clean the player, use a soft, dry cloth. If the surfaces are extremely dirty, use a soft cloth lightly moistened with a mild detergent solution. Do not use strong solvents such as alcohol, benzine, or thinner, as these might damage the surface of the unit.

Specifications

General	
Power requirements	5 V ⎓ 1.8 A (AC adapter) Built-in rechargeable battery
Power consumption	9 W
Dimensions (W x H x D)	Approx. 153 mm x 58 mm x 59.5 mm (6-1/32 x 2-9/32 x 2-11/32 inches)
Net Weight (Approx.)	0.47 kg (1.04 lb)
Operating temperature	5 °C to 35 °C (41 degrees F to 95 degrees F)
Operating humidity	5 % to 60 %

Inputs	
PORT. IN	0.65 Vrms (3.5 mm stereo jack)
USB	Micro USB port for charging battery

Speakers	
Type	built-in
Impedance Rated	4 Ω
Rated Input Power	10 W
Max Input Power	20 W

Battery	
Battery capacity	2100 mAh
Operating time	Approx. 15 hours. It may vary depending on the battery status and operational conditions.

- Design and specifications are subject to change without notice.



LG Customer Information Center	
1-800-243-0000	USA, Consumer
1-888-865-3026	USA, Commercial
Register your product Online!	
www.lg.com	