

HF-Regulator II for TL5 lamps

HF-R 139 TL5 EII 220-240V 50/60Hz

Flat, lightweight high-frequency electronic regulating ballast, using 1-10V protocol for TL5 fluorescent lamps

Product data

General Information	
Application code	EII
Type version	mk2
Lamp type	TL5
Number of lamps	1 piece/unit
Number of products on MCB (16 A type B) (nom.)	28
Automatic restart	Yes

Operating and Electrical	
Input voltage	220 to 240 V
Input frequency	50 to 60 Hz
Operating frequency (max.)	89 kHz
Operating frequency (min.)	45 kHz
Ignition method	Warm Start
Crest factor (max.)	1.7
Power factor 100% load (nom.)	0.98
Ignition time (max.)	0.2 s
Mains voltage performance (AC)	-8%-+6%
Mains voltage safety (AC)	-10%-+10%
Earth leakage current (max.)	0.5 mA
Inrush current width	0.25 ms
Power losses (nom.)	5.8 W
Inrush current peak (max.)	27 A

Wiring	
Connector type input terminals	WAGO 251 universal connector [Suitable for both automatic wiring (ALF and ADS) and manual wiring]
Connector type output terminals	WAGO 251 universal connector [Suitable for both automatic wiring (ALF and ADS) and manual wiring]
Connector type control input terminals	WAGO 251 universal connector [Suitable for both automatic wiring (ALF and ADS) and manual wiring]
Wire strip length	8.0-9.0 mm
Dual fixture master/slave	Not applicable [Master/Slave oper. not applicable]
Control input terminal cross section	0.50-1.00 mm²
Input terminal cross section	0.50-1.00 mm²
Output terminal cross section	0.50-1.00 mm²

HF-Regulator II for TL5 lamps

Auto Insert (ALF/ADS) Wire Cross Section	0.5 mm²

System characteristics

Rated ballast-lamp power	39 W

Temperature

T ambient (max.)	50 °C
T ambient (min.)	-20 °C
T storage (max.)	80 °C
T storage (min.)	-25 °C
Stable lamp operation temperature	Not Specified
T-Ignition (max.)	50 °C
T-Ignition (min.)	0 °C

Controls and Dimming

Control interface	1-10V
Regulating level power	1%-100%
Control input protection	Yes (Basic insulation)

Mechanical and Housing

Housing	L 359x30x22

Emergency Operation

Battery voltage lamp ignition	196 V
Battery voltage lamp operation	154-276

Approval and Application

Energy efficiency index	A1
EMI 9 kHz... 30 MHz	EN55015
EMI 30 MHz... 1,000 MHz	EN55022 level B
Safety standard	IEC 61347-2-3
Performance standard	IEC 60929
Quality standard	ISO 9000:2000
Environmental standard	ISO 14001
Harmonic current emission standard	IEC 61000-3-2
EMC immunity standard	IEC 61547
Vibration standard	IEC68-2-6 F c
Bumps standard	IEC 68-2-29 Eb
Humidity standard	EN 61347-2-3 clause 11
Approval marks	CE marking ENEC certificate VDE-EMV certificate
Temperature marking	Yes
Emergency standard	IEC 60598-2-22
Humming and noise level	Inaudible

Product Data

Full product code	871150091468230
Order product name	HF-R 139 TL5 EII 220-240V 50/60Hz
EAN/UPC – product	8711500914682
Order code	91468230
Local Code	HFR139TL5EII
Numerator – quantity per pack	1
Numerator – packs per outer box	12
Material no. (12NC)	913700632966
Net weight (piece)	0.260 kg

Dimensional drawing

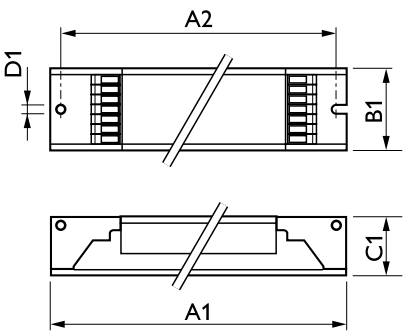

HF-R 139 TL5 EII 220-240V 50/60Hz

Product	D1	C1	A1	A2	B1
HF-R 139 TL5 EII 220-240V 50/60Hz	4.2 mm	22 mm	359 mm	350 mm	30 mm

HF-Regulator II for TL5 lamps



© 2017 Philips Lighting Holding B.V. All rights reserved. Philips Lighting reserves the right to make changes in specifications and/or to discontinue any product at any timewithout notice or obligation and will not be liable for any consequences resulting from the use of this publication.

www.lighting.philips.com
2017, June 27 - data subject to change