IGNIS

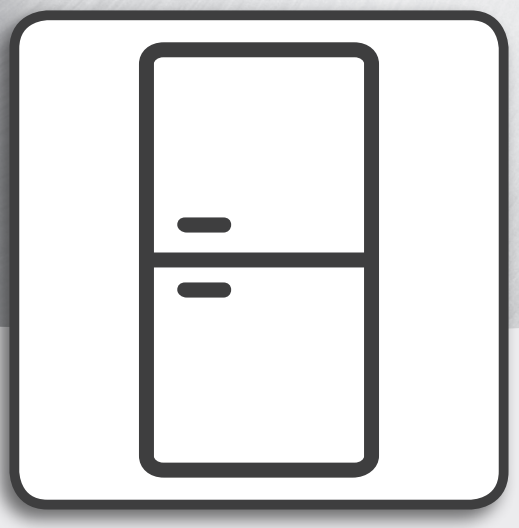

Health & Safety, Use and Care and **Installation** guide

www.whirlpool.eu/register

ENGLISH .....p .3

ENGLISH
HEALTH & SAFETY, USE & CARE and **INSTALLATION** GUIDES



THANK YOU FOR BUYING A IGNIS PRODUCT.
In order to receive a more complete assistance,
please register your appliance on **www.whirlpool.eu/register**

Index

HEALTH AND SAFETY GUIDE

SAFETY RECOMMENDATIONS 4
SAFEGUARDING THE ENVIRONMENTS 7
DECLARATION OF CONFORMITY 8

Use and Care guide

PRODUCT DESCRIPTION 9
APPLIANCE 9
CONTROL PANEL 10
TECHNICAL DATA 10
DOOR 11
REFRIGERATOR LIGHT 11
SHELVES 11
FAN 11
NO-FROST REFRIGERATOR COMPARTMENT 12
ACCESSORIES 12
HOW TO USE THE APPLIANCE 13
FIRST TIME USE 13
INS TALL ATION 13
DAILY USE / FUNCTIONS 14
FOOD STORAGE TIPS 15
RECOMMENDATION IN CASE OF NO USE OF THE APPLIANCE 19
CLEANING AND MAINTENANCE 20
TROUBLESHOOTING GUIDE AND AFTER SALES SERVICE 21
FUNCTIONAL SOUNDS 21
TROUBLESHOOTING GUIDE 22
AFTER SALES SERVICE 24

Installation guide 25

IGNIS

SAFETY RECOMMENDATIONS

IMPORTANT SAFETY INSTRUCTIONS

YOUR SAFETY AND SAFETY OF OTHERS IS VERY IMPORTANT.

This manual and the appliance itself provide important safety warnings, to be read and observed at all times.



This is the safety alert symbol. This symbol alerts you to potential hazards that can kill or hurt you and others.
All safety messages will follow the safety alert symbol and either the word **DANGER** or **WARNING**. These words mean:

⚠ DANGER

Indicates a hazardous situation which, if not avoided, will cause serious injury.

⚠ WARNING

Indicates a hazardous situation which, if not avoided, could cause serious injury.

All safety warnings give specific details of the potential risk presented and indicate how to reduce risk of injury, damage and electric shock resulting from improper use of the appliance. Carefully observe the following instructions. Failure to observe these instructions may lead to risks. The manufacturer cannot be held liable for any damage resulting from failure to respect this guide.
The Manufacturer declines any liability for injury to persons or animals or damage to property if the above advice and precautions are not respected.

Keep these instructions close at hand for future reference.

Do not store explosive substances such as aerosol cans and do not place or use gasoline or other flammable materials in or near the appliance.

When scrapping the appliance, make it unusable by cutting off the power cable and removing the doors and shelves (if present) so that children cannot easily climb inside and become trapped.

This appliance does not contain CFCs. The refrigerant circuit contains R600a (HC). Appliances with Isobutane (R600a): isobutane is a natural gas without environmental impact, but is flammable. Therefore, make sure the refrigerant circuit pipes are not damaged. Keep special attention in case of damaged pipes emptying the refrigerant circuit.

C-Pentane is used as blowing agent in the insulation foam and it is a flammable gas.

⚠ WARNING

Do not damage the appliance refrigerant circuit pipes.

⚠ WARNING

Do not use mechanical, electric or chemical means other than those recommended by the Manufacturer to speed up the defrost process.

⚠ WARNING

Do not use or place electrical devices inside the appliance compartments if they are not of the type expressly authorised by the Manufacturer.

⚠ WARNING

Ice makers and or water dispencers not directly connected to the water supply must be filled with potable water only.

⚠ WARNING

Keep ventilation openings, in the appliance enclosure or in the built-in structure, clear of obstruction.

⚠ WARNING

Automatic ice-makers and/or water dispensers must be connected to a water supply that delivers potable water only, with main water pressure between 0,17 and 0,81 MPa (1,7 and 8,1 bar).

To guarantee adequate ventilation, leave a space on both sides and above the appliance. The distance between the rear of the appliance and the wall behind the appliance should be at least 50mm.
A reduction of this space will increase the Energy consumption of product.

INTENDED USE OF THE PRODUCT

This appliance is designed solely for use as domestic usage. To aim the appliance as professional use is forbidden. The manufacturer declines allresponsibility for innapropiate use or incorrect setting of the controls.

The appliance is not intended to be operated by means of an external timer or separate remote control system.

Do not use the appliance outdoors.

This appliance is intended to be used in household and similar applications such as:
– staff kitchen areas in shops, offices and other working environments;
– farm houses and by clients in hotels, motels and other residential type environments;
– bed and breakfast type environments;
– catering and similar non-retail applications.

The bulb used inside the appliance is specifically designed for domestic appliances and is not suitable for general room lighting within the home (EC Regulation 244/2009).

INSTALLATION

Only activate the appliance when the installation procedure has been completed.

Installation and repairs must be carried out by a qualified technician, in compliance with the manufacturer's instructions and local safety regulations. Do not repair or replace any part of the appliance unless specifically stated in the user manual.

Use protective gloves to perform all unpacking and installation operations.

The appliance must be disconnected from the power supply before carrying out any installation operation.
After unpacking the appliance, make sure that it has not been damaged during transport. In the event of problems, contact the dealer or your nearest After-sales Service.

During installation, make sure the appliance does not damage the power cable.

The appliance must be handled and installed by two or more persons.

When installing the appliance make sure that the four feet are stable and resting on the floor, adjusting them as required, and check that the appliance is perfectly level using a spirit level.

Wait at least two hours before switching the appliance on, to ensure that the refrigerant circuit is fully efficient.

Make sure the appliance is not near a heat source.

ELECTRICAL WARNINGS

Make sure the voltage specified on the rating plate corresponds to that of your home.

The power supply ranges are indicated on the rating plate.
Regulation require that the appliance is earthed.
For installation to comply with current safety regulations, an omnipolar switch with minimum contact gap of 3mm is required.

If the power cable is damaged it must be replaced with an identical one. The power cable must only be replaced by a qualified technician in compliance with the manufacturer instruction and current safety regulations. Contact an authorized service center.

The electrical components must not be accessible to the user after installation.

The power cable must be long enough for connecting the appliance, once fitted in its housing, to the main power supply.
Do not use extension leads.

Do not pull the power supply cable.
Do not use multiple plug adaptors if the appliance is fitted with a plug.

For appliances with fitted plug, if the plug is not suitable for you socket outlet, contact a qualified technician.

Do not touch the appliance with any wet part of the body and do not operate it when barefoot.

Do not operate this appliance if it has a damaged mains cord or plug, if it is not working properly, or if it has been damaged or dropped. Do not immerse the mains cord or plug in water. Keep the cord away from hot surfaces.

When using a residual current circuit breaker (RCCB), only use a model marked with .

The appliance is arranged for operation in places where the temperature comes within the following ranges, according to the climatic class given on the rating plate.
The appliance may not work properly if it is left for a long time at a temperature outside the specified range.
Climatic Class Amb. T. (°C)
SN From 10 to 32
N From 16 to 32
ST From 16 to 38
T From 16 to 43

ELECTRICAL CONNECTION FOR GREAT BRITAIN AND IRELAND ONLY

Fuse replacement.
If the mains lead of this appliance is fitted with a BS 1363A 13amp fused plug, to change a fuse in this type of plug use an A.S.T.A. approved fuse to BS 1362 type and proceed as follows:

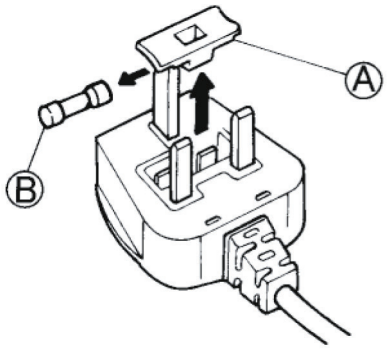

1. Remove the fuse cover (A) and fuse(B).
2. Fit replacement 13A fuse into fuse cover.
3. Refit both into plug.
Important:
The fuse cover must be refitted when changing a fuse and if the fuse cover is lost the plug must not be used until a correct replacement is fitted.
Correct replacement are identified by the colour insert or the colour embossed in words on the base of the plug.
Replacement fuse covers are available from your local electrical store.

For the Republic of Ireland only
The information given in respect of Great Britain will frequently apply, but a third type of plug and socket is also used, the 2-pin, side earth type.

Socket outlet / plug (valid for both countries)
If the fitted plug is not suitable for your socket outlet, please contact After-sales Service for further instruction. Please do not attempt to change plug yourself. This procedure needs to be carried out by a qualified technician in compliance with the manufactures instructions and current standard safety regulations.

CORRECT USE

Use the refrigerator compartment only for storing fresh food and the freezer compartment only for storing frozen food, freezing fresh food and making ice cubes.

Avoid storing unwrapped food in direct contact with internal surfaces of the refrigerator or freezer compartments.

Appliances could have special compartments for food storage.
In case not differently specified in the specific booklet of product, they can be removed, maintaining equivalent performances.
Do not swallow the contents (non-toxic) of the ice packs (in some models).

Do not eat ice cubes or ice lollies immediately after taking them out of the freezer since they may cause cold burns.

For products designed to use an air filter inside an accessible fan cover, the filter shall be always in position when the refrigerator is in function.
Do not store glass containers

with liquids in the freezer compartment since they may break.

Do not obstruct the fan (if available) with food items. After placing the food check if the door of compartments closes properly, especially the freezer door.

Damaged gasket must be replaced as soon as possible.

CHILDREN SAFETY

Very young (0-3 years) and young children (3-8 years) shall be kept away unless continuously supervised.

Childern from 8 years old and above and persons with reduced physical, sensory or mental capabilities or lack of experience and knowledge can use this appliance only if they are supervised or have been given instructions on safe appliance use and if they understand the hazards involved. Children shall not play with the appliance. Cleaning and user maintenance shall not be made by childern without supervision.

Keep the packaging materials (plastic bags, polystyrene parts, etc.) out of reach of children.

CLEANING AND MAINTENANCE

The appliance must be disconnected from the power supply before carrying out any cleaning or maintenance operation.

Never use steam cleaning equipment

SAFEGUARDING THE ENVIRONMENT

DISPOSAL OF PACKAGING MATERIALS

The packaging material is 100% recyclable and is marked with the recycle symbol:



The various parts of the packaging must therefore be disposed of responsibly and in full compliance with local authority regulations governing waste disposal.

SCRAPPING OF HOUSEHOLD APPLIANCES

This appliance is manufactured with recyclable or reusable materials. Dispose of it in accordance with local waste disposal regulations.

For further information on the treatment, recovery and recycling of household electrical appliances, contact your competent local authority, the collection service for household waste or the store where you purchase the appliance.

This appliance is marked in compliance with European Directive 2012/19/EU, Waste Electrical and Electronic Equipment (WEEE).
By ensuring this product is disposed of correctly, you will help prevent potential negative consequences for the environment and human health, which could otherwise be caused by inappropriate waste handling of this product.



This symbol on the product or on the accompanying documentation indicates that it should not be treated as

domestic waste but must be taken to an appropriate collection centre for the recycling of electrical and electronic equipment.

ENERGY SAVING TIPS

Install the appliance in a dry, well ventilated room far away from any heat source (e.g. radiator, cooker, etc.) and in a place not exposed directly to the sun. If required, use an insulating plate.
To guarantee adequate ventilation follow installation instructions. Insufficient ventilation on back of the product increases energy consumption and decreases cooling efficiency.

The internal temperatures of the appliance may be affected by the ambient temperature, frequency of door opening, as well as location of the appliance. Temperature setting should take into consideration these factors.
Reduce to a minimum door opening.

When thawing frozen food, place them in the refrigerator. The low temperature of the frozen products cools the food in the refrigerator.

Allow warm food and drinks to cool down before placing in the appliance.

Positioning of the shelves in the refrigerator has no impact on the efficient usage of energy. Food should be placed on the shelves in such way to ensure proper air circulation (food should not touch each other and distance between food and rear wall should be kept).

You can increase storage capacity of frozen food by removing baskets and, if present, Stop Frost shelve, maintaining an equivalent energy consumption.

High energy class products are fitted with high efficiency motors that remain operational for longer, but have a low power consumption. Do not worry if the engine continues to run for longer periods.

DECLARATION OF CONFORMITY

This appliance has been designed for preserving food and is manufactured in compliance with Regulation (CE) No . 1935/2004 .

This appliance has been designed, manufactured and marketed in compliance with:
› safety objectives of the "Low Voltage" Directive 2006/95/CE (which replaces 73/23/CEE and subsequent amendments);

› the protection requirements of Directive "EMC" 2004/108/EC. Electrical safety of the appliance can only be guaranteed if it is correctly connected to an approved earthing system.

PRODUCT DESCRIPTION

APPLIANCE

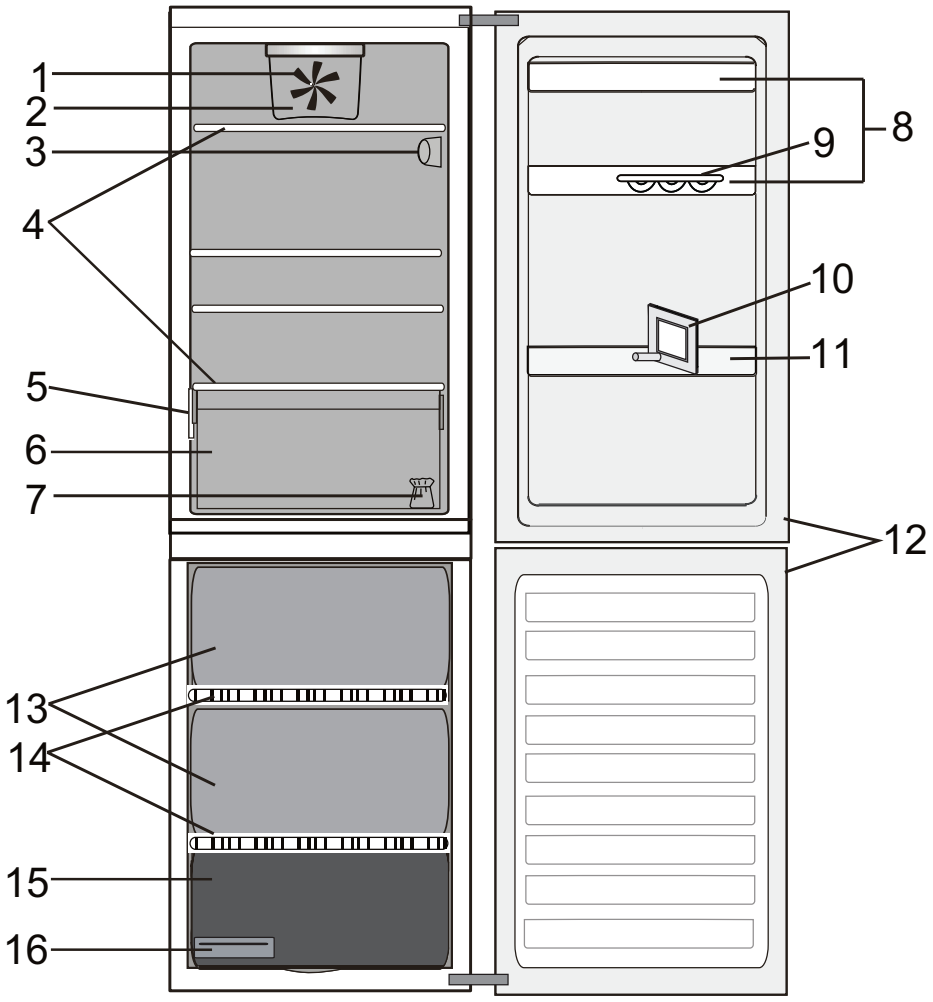

Refrigerator compartment
1. Fan
2. Fan cover
3. Electronic control panel / light unit
4. Shelves
5. Rating plate with commercial name
6. Fruits and vegetables crisper
7. Door reversibility kit
8. Door trays
9. Egg tray
10. Bottle separator
11. Bottle balcony
12. Door seal
Freezer compartment
12. Door seal
13. Freezer drawers
14. Shelves
15. Bottom drawer: coolest zone best for freezing fresh food
16. Ice tray

CONTROL PANEL

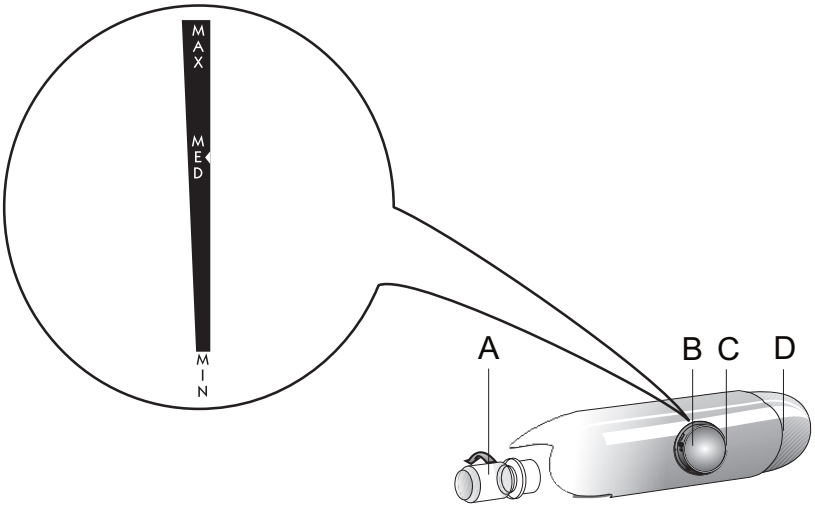

A. Light bulb
B. Thermostat knob
C. Thermostat seeting indicator
D. Light button

TECHNICAL DATA

PRODUCT DIMENSIONS		
Height	1885	mm
Width	595	mm
Depth	655	mm
NET VOLUME FRIDGE (L)	227	L
NET VOLUME FREEZER (L)	111	L
DEFROST SYSTEM		
Fridge	Manual	
Freezer	Manual	
RISING TIME (H)	24	h
FREEZING CAPACITY (KG/24H)	5.0	Kg/24h
ENERGY CONSUMPTION (KWH/24H)	0.846	Kwh/24h
NOISE LEVEL (DBA)	38	dba
ENERGY CLASS	A+	

DOOR

DOOR REVERSIBILITY

Note: The direction of door opening can be changed . If this operation is performed by After-sales Service it is not covered by the warranty . Is recommended to reverse door swing by two persons . Follow instruction in **installation guide.**

REFRIGERATOR LIGHT

To remove the light bulb turn anticlockwise as shown in the picture:



Check the bulb. If necessary unscrew the broken bulb and replace it with a LED bulb of the same type available only at our After-sales Service Centers or authorized dealers.

The refrigerator compartment light switches on when the refrigerator door is opened .

SHELVES

All shelves, flaps and pull-out baskets are removable.

NO-FROST REFRIGERATOR COMPARTMENT

Refrigerator compartment defrosting is completely automatic.

Droplets of water on the rear wall inside the refrigerator compartment indicate that the automatic defrost phase is in progress. The defrost water is automatically run into a drain hole and collected in a container, where it evaporates.

DEFROSTING THE FREEZER COMPARTMENT

The freezer should be defrosted once or twice a year or when excessive frost is present (3 mm thickness). The formation of frost is normal.
The amount and rate at which frost accumulates depends on room conditions and how often the door is open.
To defrost the unit, switch off the product and take out all food.
Leave the freezer door open to allow the frost to melt.

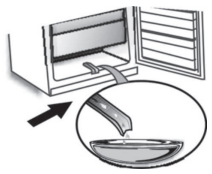

For appliances in figure only pull out the defrost water drain and place a container under the drain.
When the operation is completed, put back the defrost water drain.
Clean the inside of the freezer. Rinse and dry thoroughly.
Switch the appliance back on and store the food inside.

ACCESSORIES

EGG TRAY

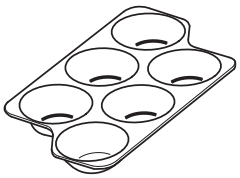

BOTTLE SE PARATOR

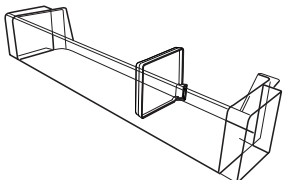

ICE TRAY

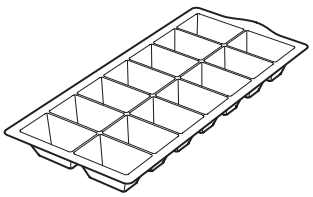

HOW TO USE THE APPLIANCE

FIRST TIME USE

HOW TO START THE APPLIANCE

After plugging the appliance to the mains, it starts the operation automatically.
After starting the appliance, wait at least 4-6 hours before placing food into the appliance.

When the appliance is connected to the power supply, the display lights up and all the icons appear on the display for approximately 1 second. The default (factory) values of the fridge compartment settings light-up.

TEMPERATURE SETTING

The appliance is normally factory-set for operation at the recommended medium temperature.

Note: Displayed set points correspond to the average temperature throughout the whole refrigerator.

INSTALLATION

INSTALLING SINGLE APPLIANCE

To guarantee adequate ventilation, leave a space on both sides and above the appliance.
The distance between the rear of the appliance and the wall behind the appliance should be at least 50mm.
A reduction of this space will increase the Energy consumption of product.

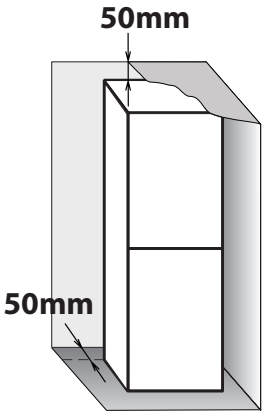

INSTALLING THE SPACERS

Fit the spacers on the upper and bottom part of condenser (according the drawing) at the rear of the appliance.

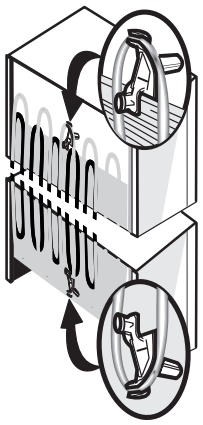

DAILY USE

HOW TO INCREASE FREEZER STORAGE CAPACITY

• removing the baskets to allow the storage of big products.
• placing the food products directly on the freezer shelves.
• removing additional removable accessories.

• Do not block the air out area (on the back wall and on the bottom inside the product) with food products.
• All shelves and pull-out baskets are removable.
• The internal temperatures of the appliance may be affected by the ambient temperature, frequency of door opening, as well as location of the appliance. Temperature setting should take into consideration these factors.
• Unless otherwise specified the appliance accessories are not dishwasher safe.

FUNCTIONS

TEMPERATURE SETTING	Thermostat set to **MIN**: low cooling intensity Thermostat set between **MIN** and **MAX** : cooling intensity can be adjusted according to the preferences. Thermostat set to **MAX**: maximum refrigeration intensity.	For the best food conservation **MED** position is recommended. Thermostat set to • : cooling and lighting off.

FOOD-STORAGE TIPS

FRIDGE COMPARTMENT

The refrigerator is the ideal storage location for ready meals, fresh and preserved food, dairy products, fruit and vegetables and beverage.

AIR VENTILATION

The natural circulation of air in the refrigerator compartment results in zones with different temperatures. It is coldest directly above the fruits and vegetables crisper and at the rear wall. It is warmest at the top front of the compartment.

Insufficient ventilation results in an increase in energy consumption and reduction of the refrigerating performance.
Do not cover air slots by food on other staff - they are optimized for proper air circulation and food preservation.

HOW TO STORE FRESH FOOD AND BEVERAGE

Use recyclable plastic, metal, aluminum and glass containers and cling film to wrap foods.

› Always use closed containers for liquids and for food that may give off or be tainted by odor or flavor transfer or cover them.

› Foods which give off a large amount ethylene gas and those that are sensitive to this gas, such as fruit, vegetables and salad, should always be separated or wrapped so as not to reduce the storage life; for example do not store tomatoes together with kiwi fruits or cabbage.

› Do not store food too close together to enable sufficient air circulation.

› To avoid bottles falling over, you can use the bottle holder.

› If you have a little quantity of food to store in the refrigerator, we recommend to use the shelves above the crisper for fruits and vegetables since this is the coolest area of the compartment.

WHERE TO STORE FRESH FOOD AND BEVERAGE

› On the fridge shelves: ready meals, tropical fruits, cheeses, deli.

› In the coldest area (the one above the fruits and vegetables crisper): meat, fish, cold cuts, cakes.

› In the fruits and vegetables crisper: fruits, salad, vegetables.
› In the door: butter, jams, sauces, pickles, cans, bottles, beverage cartons, eggs.

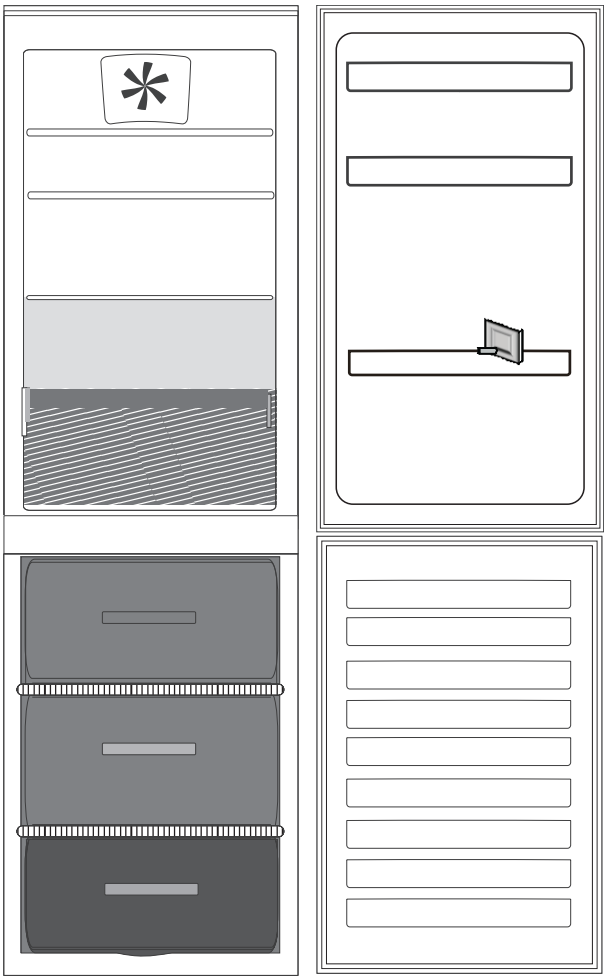

Legend

TEMPERATE ZONE Suggested for the storage of tropical fruit, cans, drinks, eggs, sauces, pickles, butter, jam.

COOL ZONE Suggested for storage of cheese, milk, daily food, delicatessen, yogurt.

FRUIT & VEGETABLE DRAWER

FREEZING ZONE DRAWER (MAX COOL ZONE) Suggested to freeze fresh/cooked food.

FREEZER DRAWERS

Note
The Grey tone of the legend doesn't match with the color of drawers

FREEZER COMPARTMENT

The freezer is the ideal storage location for store frozen food, make ice cubes and freeze fresh food in the freezer compartment.

The maximum number of kilograms of fresh food that can be frozen within a 24-hour period is indicated on the rating plate (…kg/24h).
If you have a little quantity of food to store in the freezer, we recommend to use the middle area.

TIPS FOR FREEZING AND STORING FRESH FOOD

› We recommend to label and date all your frozen food. Adding a label will help you to identify foods and to know when they should be used before their quality deteriorates.Do not re-freeze defrosted food.

› Before freezing, wrap and seal fresh food in: aluminium foil, cling film, air and water-tight plastic bags, polythene containers with lids or freezer containers suitable for freezing fresh food.

› Food must be fresh, mature and of prime quality in order to obtain high quality frozen food.

› Fresh vegetables and fruit should preferably be frozen as soon as they are picked to maintain the full original nutritional value, consistency, colour and flavor. Some meat, especially game, should be hung before it is frozen.

› Always leave hot food to cool before placing in the freezer.

› Eat fully or partially defrosted foods immediately. Do not refreeze unless the food is cooked after it has thawed. Once cooked, the thawed food can be refrozen.

› Do not freeze bottles with liquid.

› Please use fast cooling function to speed up cooling of freezing process (see Daily Reference Guide).

FROZEN FOOD: SHOPPING TIPS

When purchasing frozen food products:

› Ensure that the packaging is not damaged (frozen food in damaged packaging may have deteriorated). If the package is swollen or has damp patches, it may not have been stored under optimal conditions and defrosting may have already begun.

› When shopping, buy frozen foods at the end of your trip and transport them in a thermally insulated cool bag.

› Once at home, place the frozen foods immediately in the freezer.

› If food has defrosted even partially, do not refreeze it. Consume within 24 hours.

› Avoid or reduce temperature variations to the minimum. Respect the best-before date on the package.

› Always observe the storage information on the package.

STORAGE TIME OF FROZEN FOOD

MEAT	*months*
Beef	8 - 12
Pork, veal	6 - 9
Lamb	6 - 8
Rabbit	4 - 6
Mince/Offal	2 - 3
Sausages	1 - 2
POULTRY	
Chicken	5 - 7
Turkey	6
Giblets	2 - 3
CRUSTACEANS	
Molluscs creab, lobster	1 - 2
Crab, lobster	1 - 2
SHELLFISH	
Oyster, Shucked	1 - 2
FISH	
"fatty" (salmon, herring, meckerel)	2 - 3
"lean" (code, sole)	3 - 4

STEWS	*months*
Meat, Poultry	2 - 3
DAIRY PRODUCTS	
Butter	6
Cheese	3
Double Cream	1 - 2
Ice-cream	2 - 3
Eggs	8
SOUPS AND SAUCES	
Soup	2 - 3
Meat Sauce	2 - 3
Pate	1
Ratatouille	8
PASTRY AND BREAD	
Bread	1 - 2
Cakes (plain)	4
Gateaux (cakes)	2 - 3
Crepes	1 - 2
Uncooked pastry	2 - 3
Quiche	1 - 2
Pizza	1 - 2

FRUITS	*months*
Apples	12
Apricots	8
Blackberries	8 - 12
Blackcurrants / Redcurrants	8 - 12
Cherries	10
Peaches	10
Pears	8 - 12
Plum	10
Raspberries	8 - 12
Strawberries	10
Rhubarb	10
Fruit juices (orange, lemon, grapefruit)	4 - 6
VEGETABLES	
Asparagus	8 - 10
Basil	6 - 8
Beans	12
Artichokes	8 - 10
Broccoli	8 - 10
Brussels sprout	8 - 10
Cauliflower	8 - 10
Carrots	10 - 12
Celery	6 - 8
Mushrooms	8
Parlsey	6 - 8
Peppers	10 - 12
Peas	12
Runner-beans	12
Spinach	12
Tomatoes	8 - 10
Zucchini	8 - 10

RECOMMENDATION IN CASE OF NO USE OF THE APPLIANCE

ABSENCE / VACATION

In case longer absence its recommended to use up food and to disconnect the appliance to save energy.

MOVING

1. Take out all internal parts.

2. Wrap them well, and fix them together with adhesive tape so that they do not bang together or get lost.

3. Screw the adjustable feet so that they do not touch the support surface.

4. Close and fix door with adhesive tape and, again using adhesive tape, fix the power cable to the appliance.

POWER FAILURE

In the event of a power failure, call the local office of your electricity supply company and ask how long it is going to last.

Note: Bear in mind that a full appliance will stay cold longer than a partially filled one.

If ice crystals are still visible on the food, it may be frozen again, although flavour and aroma may be affected.

If food is found to be in a poor condition, it is best to throw it away.

For power failures lasting up to 24 hours.
Keep the door of the appliance closed. This will allow the stored food to stay cold as long as possible.

For power failures lasting more than 24 hours.
Empty the freezer compartment and arrange the food in a portable freezer. If this type of freezer is not available and, likewise, no artificial ice packs are available, try to use up the food, which is more easily perishable.

Empty the ice tray.

CLEANING AND MAINTENANCE

⚠ WARNING

Before any cleaning or maintenance operation, unplug the appliance from the mains or disconnect the electrical power supply.

Never use abrasives. Never clean refrigerator parts with flammable fluids.

⚠ WARNING

Do not use steam cleaners.

The buttons and control panel display must not be cleaned with alcohol or alcohol-derived substances, but with a dry cloth.

› Periodically clean the appliance with a cloth and a solution of lukewarm water and neutral detergent specifically for refrigerator interiors.

› Clean the outside of the appliance and the door seal with a damp cloth and dry with a soft cloth.

› Condenser placed in the rear of the appliance should be cleaned regularly using a vacuum cleaner.

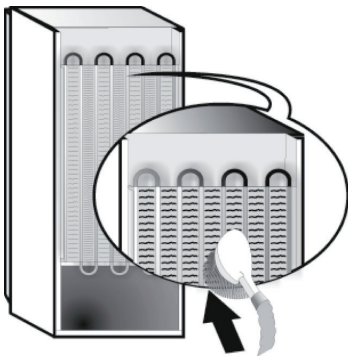

Important:

› The buttons and control panel display must not be cleaned with alcohol or alcohol-derived substances, but with a dry cloth.

› The refrigeration system pipes are located near the defrost pan and can become hot. Periodically clean them with a vacuum cleaner.

To ensure continuous and correct flow of defrost water, regularly clean the inside of the draining hole on the back of the refrigerator near the fruit and vegetable drawer, using the tool provided.

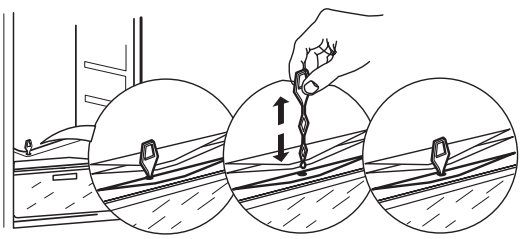

TROUBLESHOOTING GUIDE & AFTER-SALES SERVICE

BEFORE CONTACTING AFTER-SALES SERVICE...

Performance problems often result from little things you can find and fix yourself without tools of any kind.

FUNCTIONAL SOUNDS

Sounds coming from your appliances are normal since it has a number of fans and engines to regulate performances that switch on and off automatically.

SOME OF THE FUNCTIONAL SOUNDS CAN BE REDUCED THROUGH:

› Leveling the appliance and installing it on an even surface.

› Separating and avoiding contact between the appliance and furniture.

› Checking if the internal components are correctly placed.

› Checking if bottles and containers are not in contactwith each other.

SOME OF THE FUNCTIONAL SOUNDS YOU MIGHT HEAR

A hissing sound when switching on the appliance for the first time or after a long pause.



A gurgling sound when refrigerant fluid enters into the pipes.



BRRR sound is from the compressor running.



Buzzing sound when water valve or fan start working.



A cracking sound when compressor starts.



The CLICK is from the thermostat which adjusts how often the compressor is running.



TROUBLESHOOTING GUIDE

Problem	*Possible Cause*	*Solution*
THE APPLIANCE IS NOT WORKING	There may be an appliance power supply problem.	› Check if power cable plugged into a live socket with the proper voltage. › Check if the protection devices and fuses of the electrical system in your home
THERE IS WATER IN THE DEFROST PAN	This is normal in hot, damp weather. The pan can even be half full.	› Make sure the appliance is level so that the water does not overflow.
THE EDGES OF THE APPLIANCE CABINET, WHICH COME IN CONTACT WITH THE DOOR SEAL, ARE WARM TO THE TOUCH	This is not a defect. This is normal in hot weather and when the compressor is running.	
THE LIGHT DOES NOT WORK	The light may need replacing. The appliance may be in On/ Stand-by model	› Make sure if the protection devices and fuses of the electrical system in your home work well. › Check if the power cable is plugged into a live socket with the proper voltage › In case the LEDs are broken the user must call the Service for exchange of the same type available only at our After-sales Service Centers or authorized dealers.
THE MOTOR SEEMS TO RUN TOO MUCH	Motor running time depends on different things: number of door openings, amount of food stored, temperature of the room, setting of the temperature controls.	› Make sure that the appliance controls are correctly set. › Check if there is not a large amount of food been added to the appliance. › Check that the door is not opened too often. › Check that the door close properly.

THE APPLIANCE TEMPERATURE IS TOO HIGH	There could be various causes (see “Solutions”)	› Make sure that the condenser (back the appliance) is free of dust and fluff. › Make sure that the door properly closed. › Make sure that the door seals properly fitted. › On hot days or if the room is warm, the motor naturally runs longer. › If the appliance door has been left open for a while or if large amounts of food have been stored, the motor will run longer in order to cool down the interior of the appliance.
THE DOORS DO NOT OPEN AND CLOSE PROPERLY	There could be various causes (see “Solutions”)	› Check that food packages are not blocking the door. › Check that the internal parts or automatic ice maker are not out of position. › Check that the door seals are not dirty or sticky. › Ensure the appliance is level.

AFTER-SALES SERVICE

BEFORE CALLING THE AFTER-SALES SERVICE

1. See if you can solve the problem by yourself with the help of the suggestions given in the **TROUBLESHOOTING GUIDE**.

2. Switch the appliance off and back on again to see if the fault persists

IF AFTER THE ABOVE CHECKS THE FAULT STILL OCCURS, GET IN TOUCH WITH THE NEAREST AFTER-SALES SERVICE

To receive assistance, call the number shown on the warranty booklet or follow the instructions on the website **www.whirlpool.eu**

Always specify:
- a brief description of the fault;
- the type and exact model of the appliance;
- the service number (number after the word Service on the rating plate). The service number is also indicated on the guarantee booklet;
- your full address;
- your telephone number.



If any repairs are required, please contact an authorised after-sales service (to guarantee that original spare parts will be used and repairs carried out correctly).

Manufacturer:
Whirlpool Europe s.r.l. - Socio Unico
Viale Guido Borghi 27
21025 Comerio (VA)
Italy

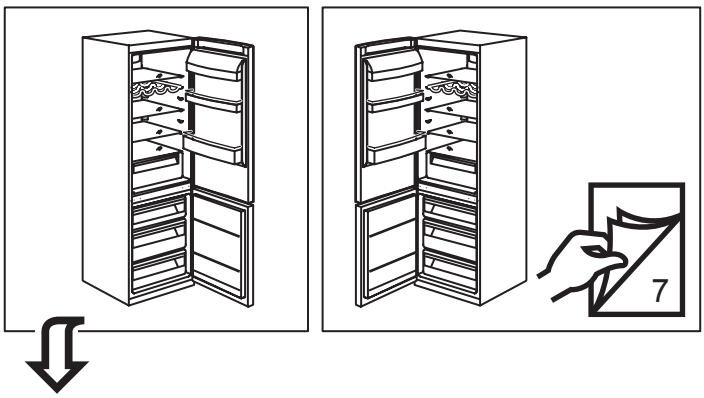
7

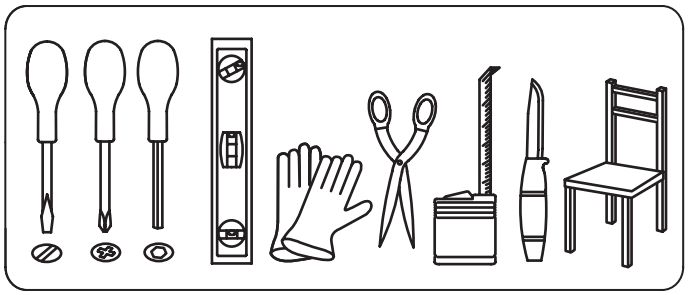

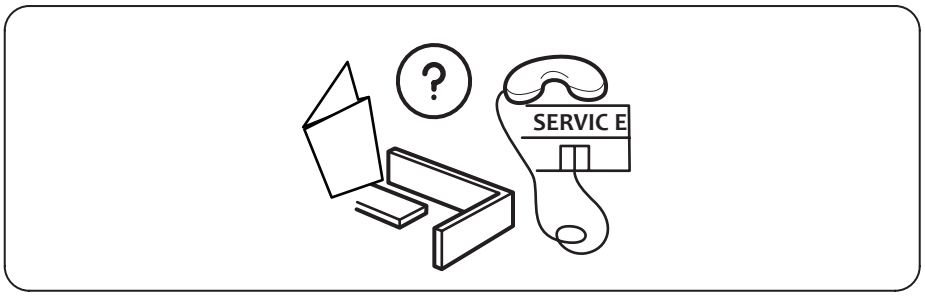
?
SERVIC E

1.

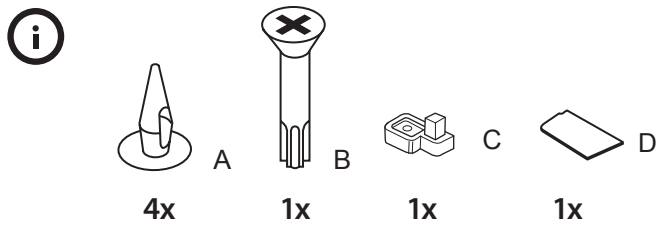

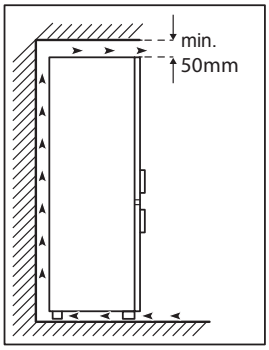

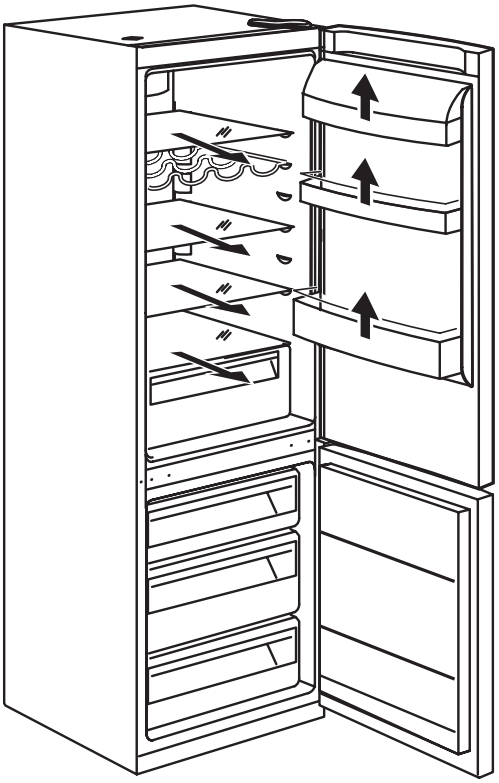

2.

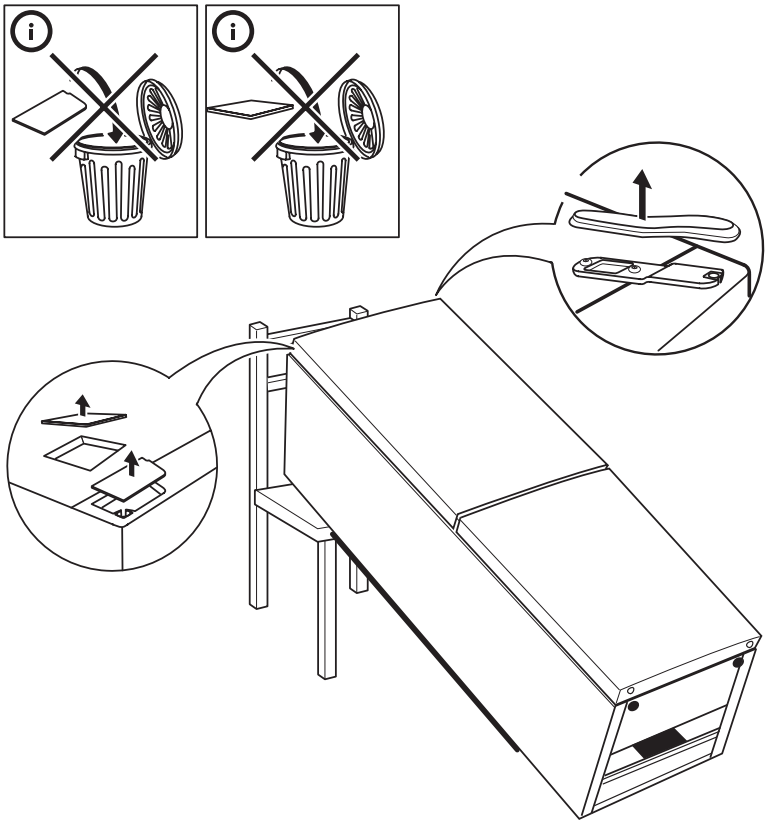

3.

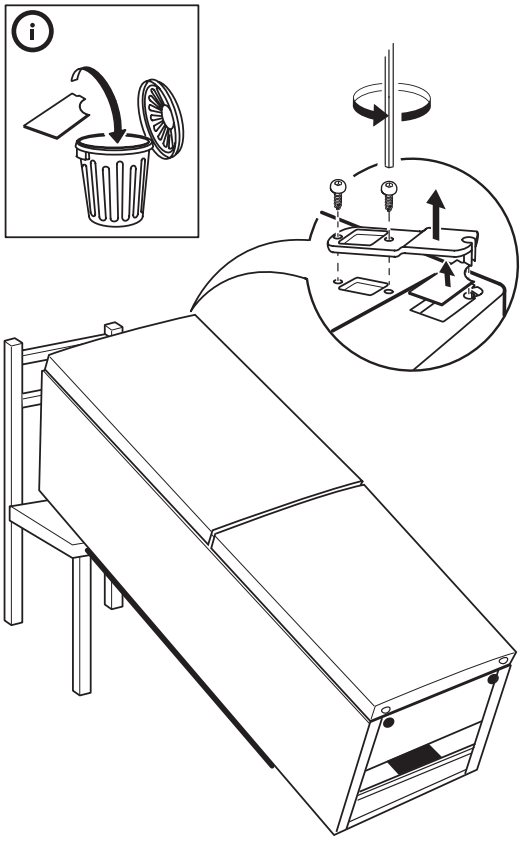

IGNIS

4.

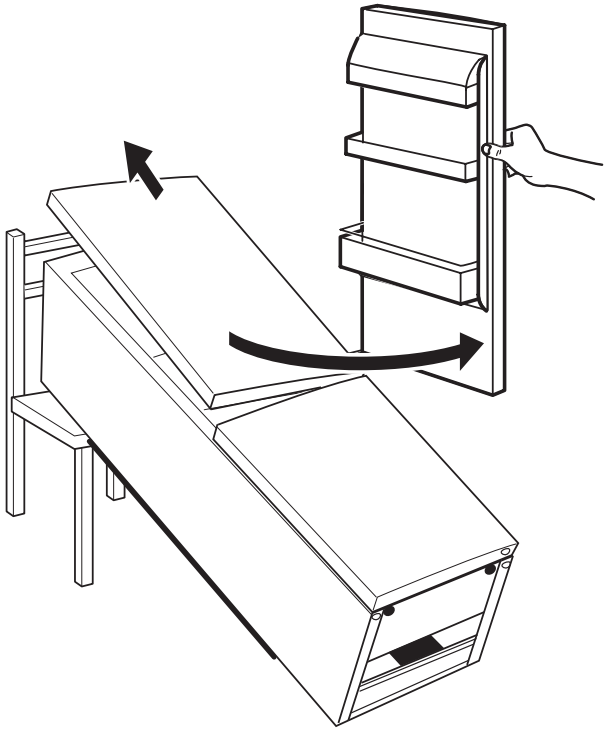

5.

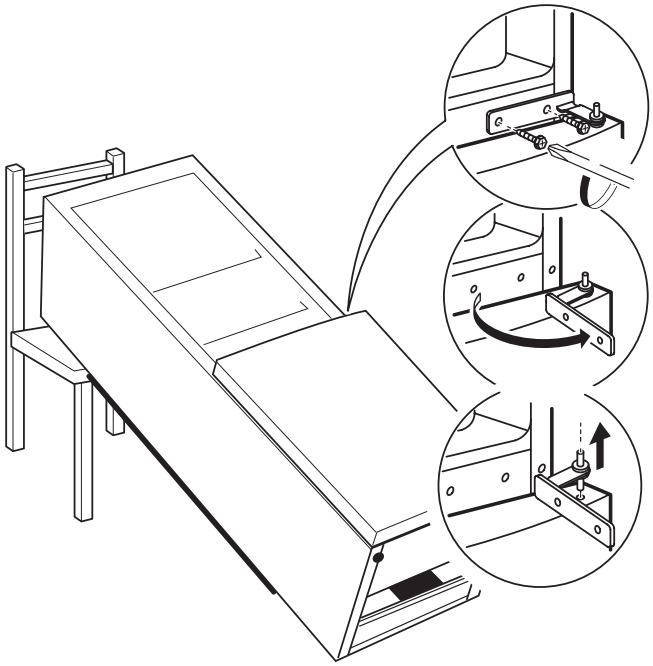

6.

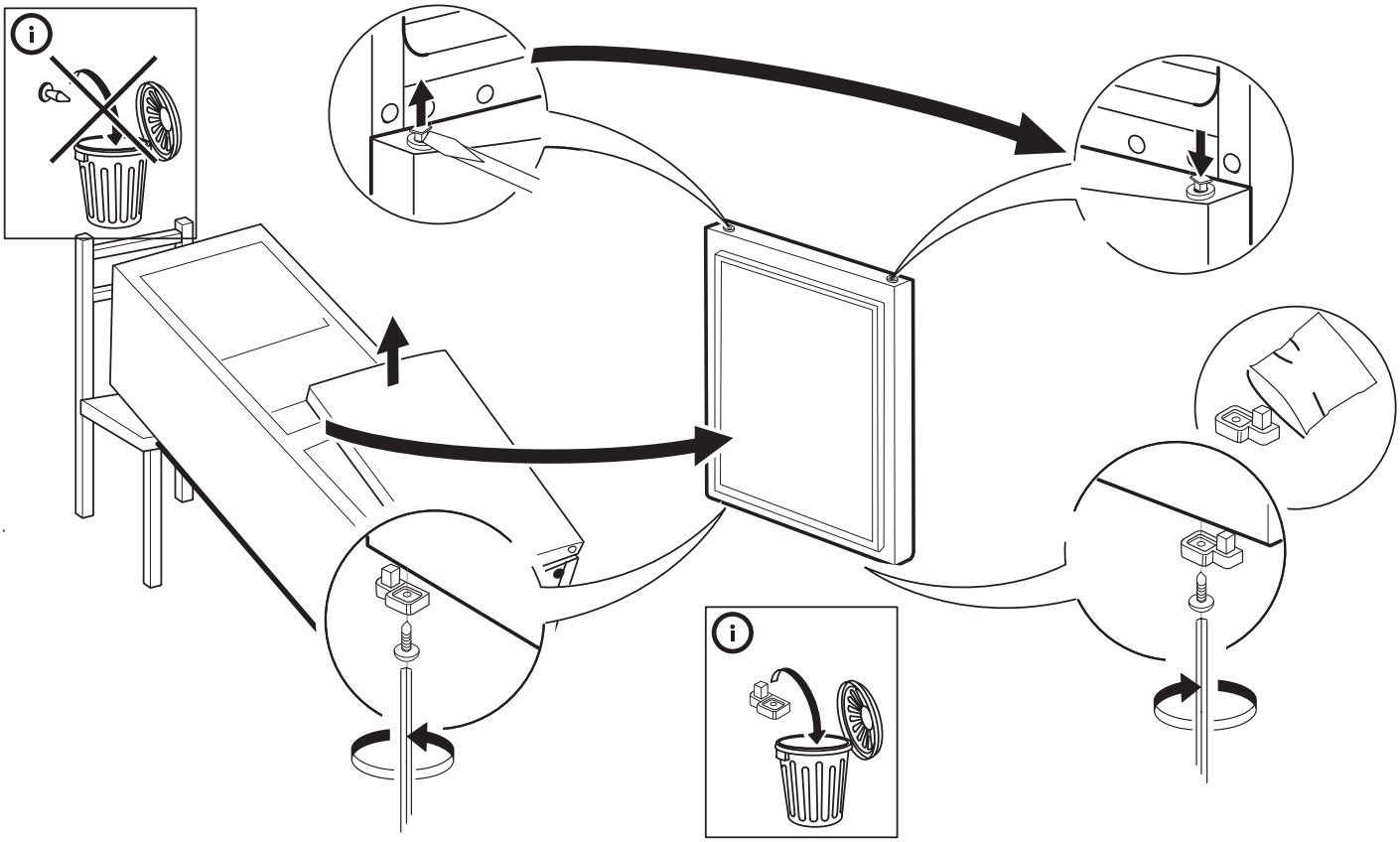

IGNIS

7.

8.

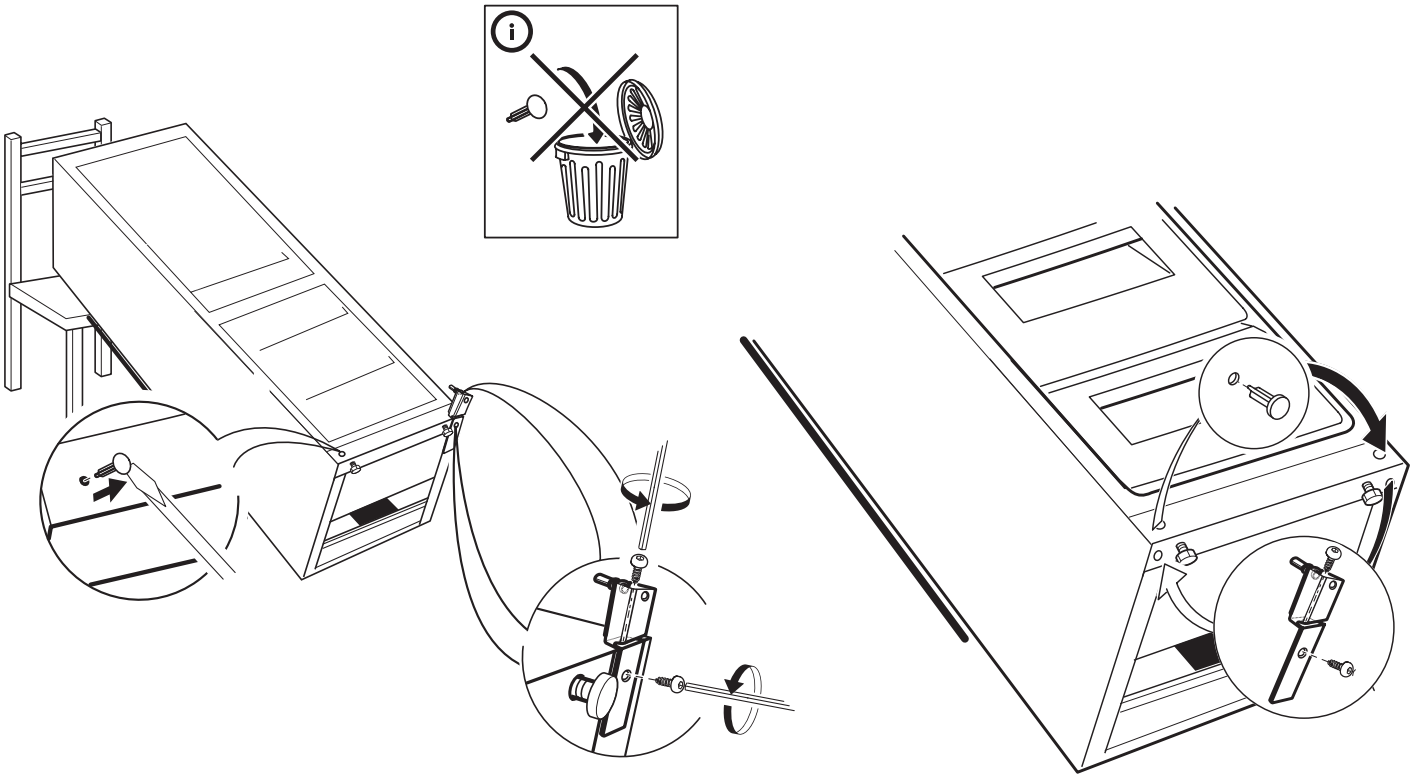

9.

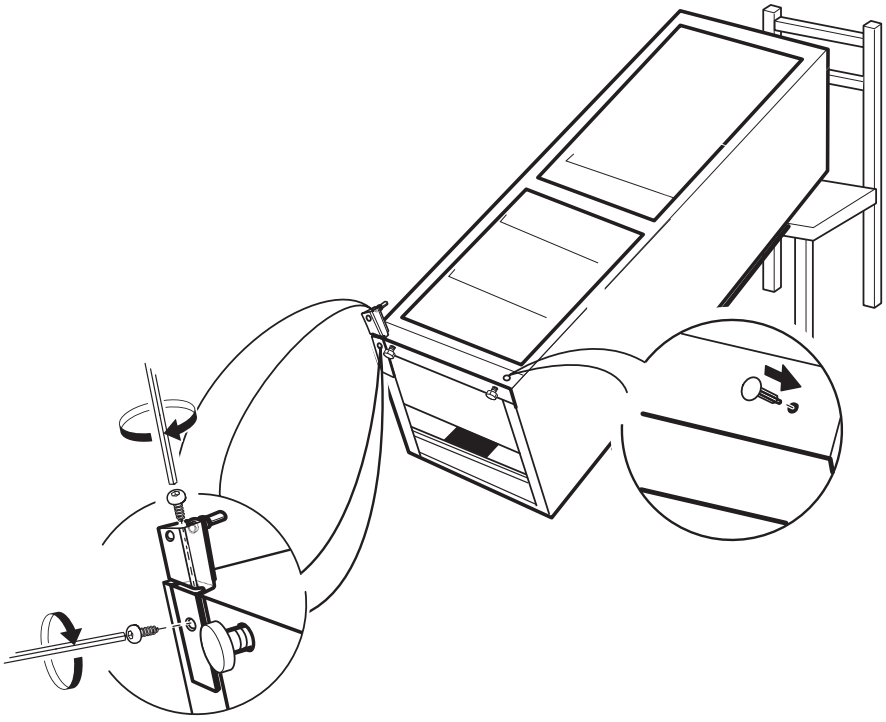

10.

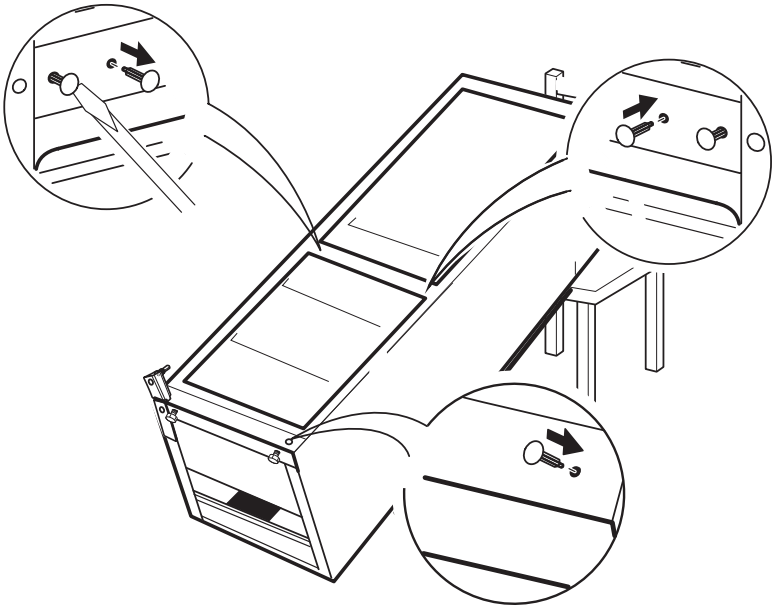

11.

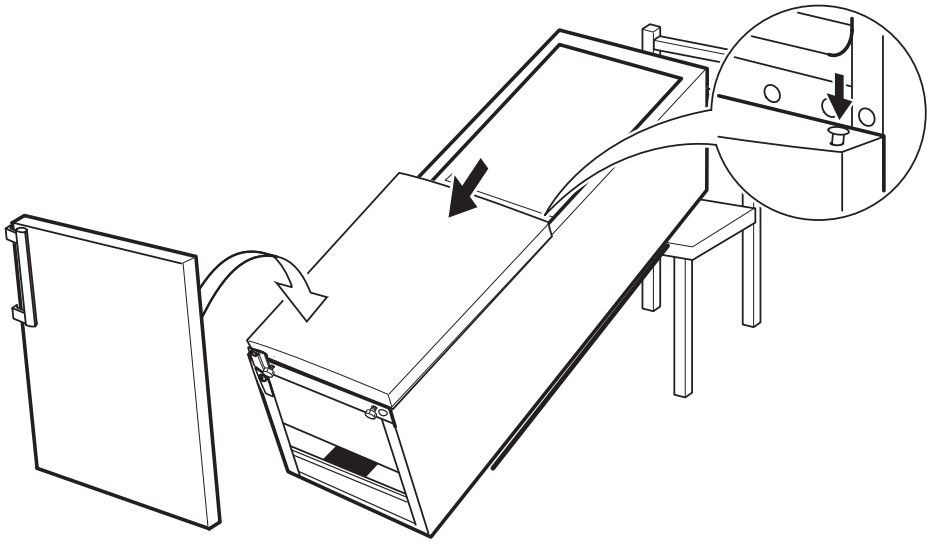

12.

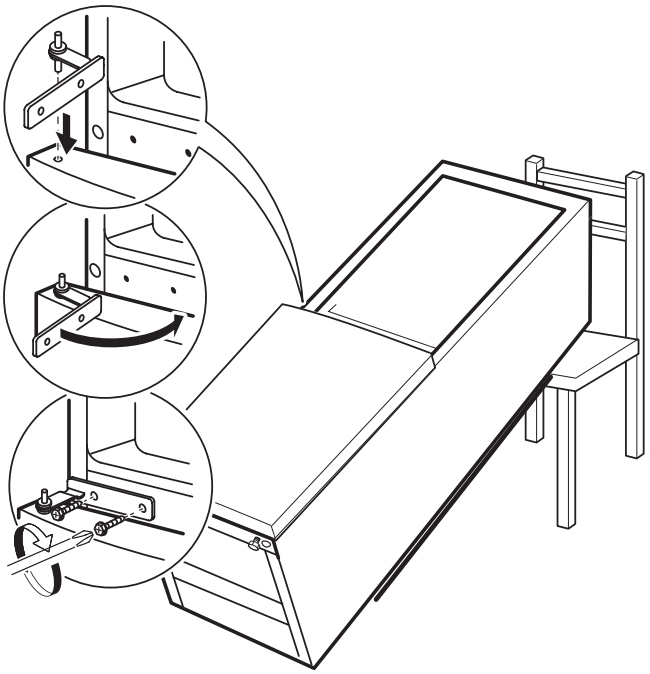

13.

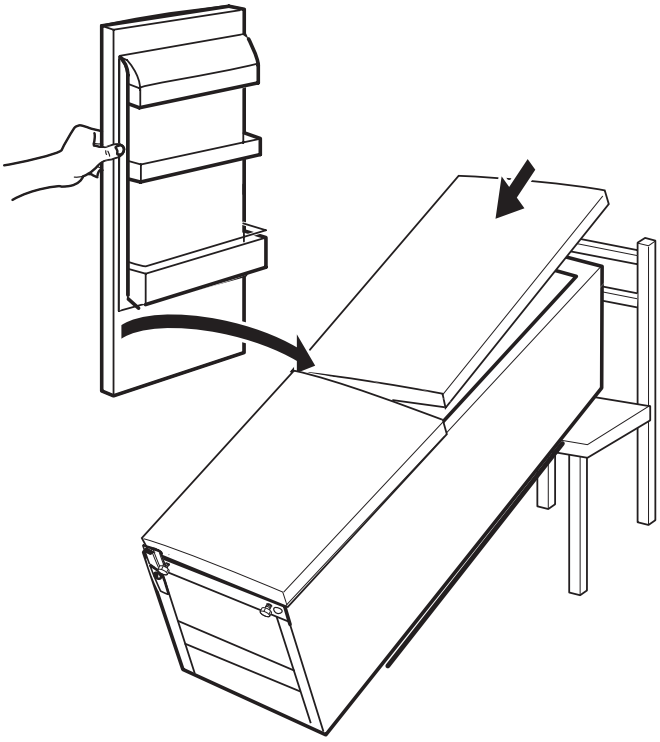

14.

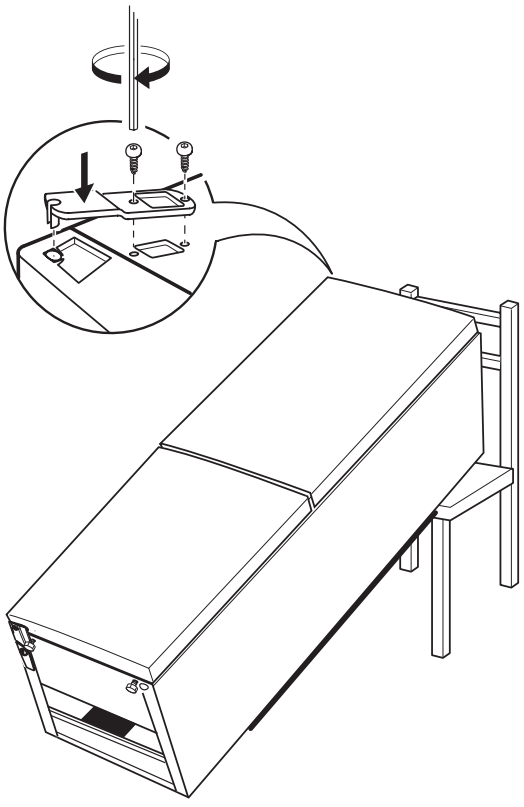

15.

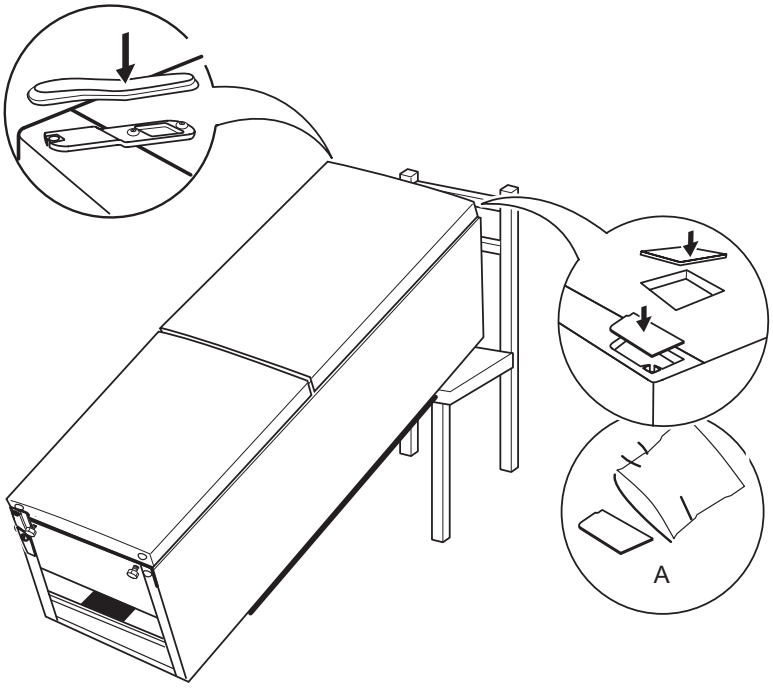

IGNIS

16.

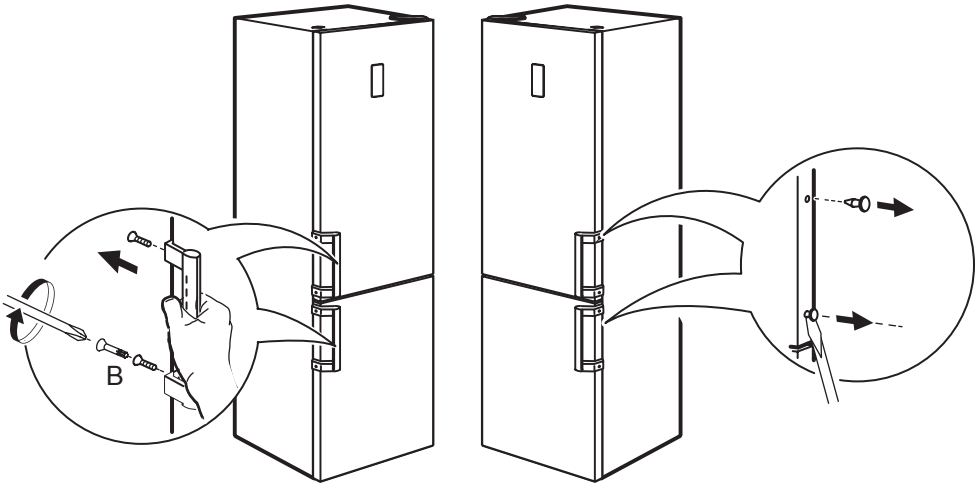

17.

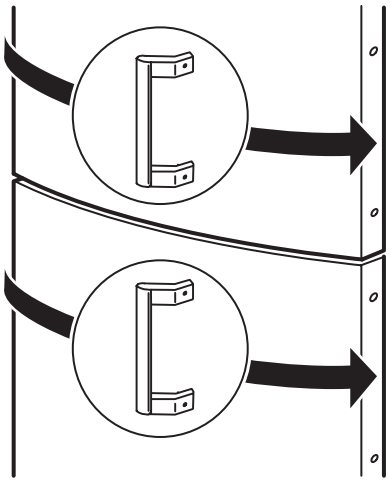

18.

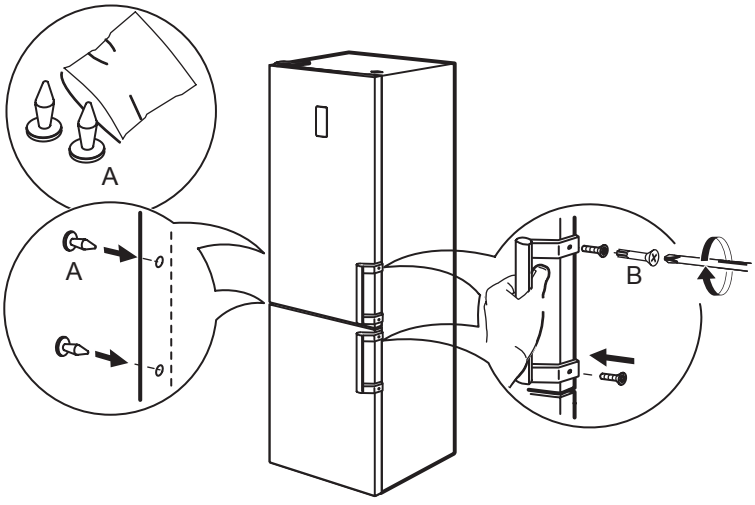

19.

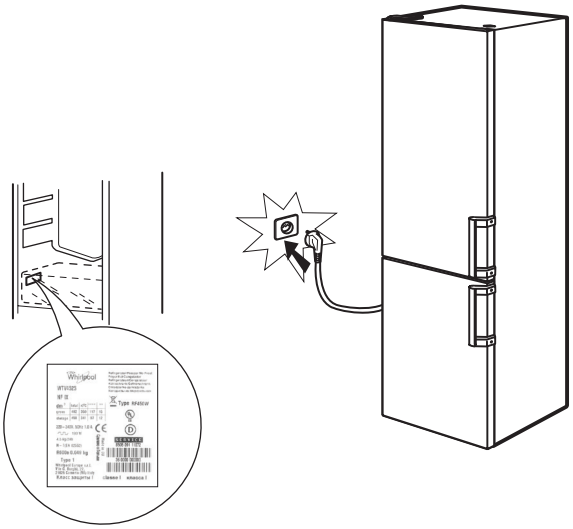

IGNIS

EN

400010788224

Whirlpool® Registered trademark/TM Trademark of Whirlpool group of companies -
© Copyright Whirlpool Europe s.r.l. 2014. All rights reserved - http://www.whirlpool.eu

IGNIS