EZA5420AOK
EZA5420AOW



EN Oven

User Manual

Electrolux

CONTENTS

1. SAFETY INFORMATION....3
2. SAFETY INSTRUCTIONS....4
3. PRODUCT DESCRIPTION....7
4. CONTROL PANEL....7
5. BEFORE FIRST USE....8
6. DAILY USE....8
7. CLOCK FUNCTIONS....9
8. USING THE ACCESSORIES....11
9. ADDITIONAL FUNCTIONS....12
10. HINTS AND TIPS....13
11. CARE AND CLEANING....21
12. TROUBLESHOOTING....24
13. INSTALLATION....25
14. ENERGY EFFICIENCY....26

WE'RE THINKING OF YOU

Thank you for purchasing an Electrolux appliance. You've chosen a product that brings with it decades of professional experience and innovation. Ingenious and stylish, it has been designed with you in mind. So whenever you use it, you can be safe in the knowledge that you'll get great results every time.
Welcome to Electrolux.
Visit our website for:

Get usage advice, brochures, trouble shooter, service information:
www.electrolux.com/webselfservice

Register your product for better service:
www.registerelectrolux.com

Buy Accessories, Consumables and Original spare parts for your appliance:
www.electrolux.com/shop

CUSTOMER CARE AND SERVICE

Always use original spare parts.
When contacting our Authorised Service Centre, ensure that you have the following data available: Model, PNC, Serial Number.
The information can be found on the rating plate.

⚠ Warning / Caution-Safety information
ⓘ General information and tips
Environmental information

Subject to change without notice.

1. ⚠ SAFETY INFORMATION

Before the installation and use of the appliance, carefully read the supplied instructions. The manufacturer is not responsible for any injuries or damages that are the result of incorrect installation or usage. Always keep the instructions in a safe and accessible location for future reference.

1.1 Children and vulnerable people safety

- This appliance can be used by children aged from 8 years and above and persons with reduced physical, sensory or mental capabilities or lack of experience and knowledge if they have been given supervision or instruction concerning the use of the appliance in a safe way and understand the hazards involved.
- Children between 3 and 8 years of age and persons with very extensive and complex disabilities shall be kept away unless continuously supervised.
- Children of less than 3 years of age should be kept away unless continuously supervised.
- Do not let children play with the appliance.
- Keep all packaging away from children and dispose of it appropriately.
- Keep children and pets away from the appliance when it operates or when it cools down. Accessible parts are hot.
- If the appliance has a child safety device, it should be activated.
- Children shall not carry out cleaning and user maintenance of the appliance without supervision.

1.2 General Safety

- Only a qualified person must install this appliance and replace the cable.
- WARNING: The appliance and its accessible parts become hot during use. Care should be taken to avoid touching heating elements.

- Always use oven gloves to remove or put in accessories or ovenware.
- Before carrying out any maintenance, disconnect the appliance from the power supply.
- Ensure that the appliance is switched off before replacing the lamp to avoid the possibility of electric shock.
- Do not use a steam cleaner to clean the appliance.
- Do not use harsh abrasive cleaners or sharp metal scrapers to clean the glass door since they can scratch the surface, which may result in shattering of the glass.
- If the mains power supply cable is damaged, it must be replaced by the manufacturer, its Authorised Service Centre or similarly qualified persons to avoid an electrical hazard.
- To remove the shelf supports first pull the front of the shelf support and then the rear end away from the side walls. Install the shelf supports in the opposite sequence.

2. SAFETY INSTRUCTIONS

2.1 Installation

WARNING!
Only a qualified person must install this appliance.

- Remove all the packaging.
- Do not install or use a damaged appliance.
- Follow the installation instructions supplied with the appliance.
- Always take care when moving the appliance as it is heavy. Always use safety gloves and enclosed footwear.
- Do not pull the appliance by the handle.
- Keep the minimum distance from other appliances and units.
- Install the appliance in a safe and suitable place that meets installation requirements.
- The appliance is equipped with an electric cooling system. It must be operated with the electric power supply.

2.2 Electrical connection

WARNING!
Risk of fire and electric shock.

- All electrical connections should be made by a qualified electrician.
- The appliance must be earthed.
- Make sure that the parameters on the rating plate are compatible with the electrical ratings of the mains power supply.
- Always use a correctly installed shockproof socket.
- Do not use multi-plug adapters and extension cables.
- Make sure not to cause damage to the mains plug and to the mains cable. Should the mains cable need to

be replaced, this must be carried out by our Authorised Service Centre.
- Do not let mains cables touch or come near the appliance door, especially when the door is hot.
- The shock protection of live and insulated parts must be fastened in such a way that it cannot be removed without tools.
- Connect the mains plug to the mains socket only at the end of the installation. Make sure that there is access to the mains plug after the installation.
- If the mains socket is loose, do not connect the mains plug.
- Do not pull the mains cable to disconnect the appliance. Always pull the mains plug.
- Use only correct isolation devices: line protecting cut-outs, fuses (screw type fuses removed from the holder), earth leakage trips and contactors.
- The electrical installation must have an isolation device which lets you disconnect the appliance from the mains at all poles. The isolation device must have a contact opening width of minimum 3 mm.
- This appliance complies with the E.E.C. Directives.

2.3 Use

WARNING!
Risk of injury, burns and electric shock or explosion.

- This appliance is for household use only.
- Do not change the specification of this appliance.
- Make sure that the ventilation openings are not blocked.
- Do not let the appliance stay unattended during operation.
- Deactivate the appliance after each use.
- Be careful when you open the appliance door while the appliance is in operation. Hot air can release.
- Do not operate the appliance with wet hands or when it has contact with water.
- Do not apply pressure on the open door.
- Do not use the appliance as a work surface or as a storage surface.
- Open the appliance door carefully. The use of ingredients with alcohol can cause a mixture of alcohol and air.
- Do not let sparks or open flames to come in contact with the appliance when you open the door.
- Do not put flammable products or items that are wet with flammable products in, near or on the appliance.

WARNING!
Risk of damage to the appliance.

- To prevent damage or discoloration to the enamel:
  - do not put ovenware or other objects in the appliance directly on the bottom.
  - do not put aluminium foil directly on the bottom of cavity of the appliance.
  - do not put water directly into the hot appliance.
  - do not keep moist dishes and food in the appliance after you finish the cooking.
  - be careful when you remove or install the accessories.
- Discoloration of the enamel or stainless steel has no effect on the performance of the appliance.
- Use a deep pan for moist cakes. Fruit juices cause stains that can be permanent.
- This appliance is for cooking purposes only. It must not be used for other purposes, for example room heating.
- Always cook with the oven door closed.
- If the appliance is installed behind a furniture panel (e.g. a door) make sure the door is never closed when the appliance is in operation. Heat and moisture can build up behind a closed furniture panel and cause subsequent damage to the appliance, the housing unit or the floor. Do not close the furniture panel until the appliance has cooled down completely after use.

2.4 Care and cleaning

WARNING!
Risk of injury, fire, or damage to the appliance.

- Before maintenance, deactivate the appliance and disconnect the mains plug from the mains socket.
- Make sure the appliance is cold. There is the risk that the glass panels can break.
- Replace immediately the door glass panels when they are damaged. Contact the Authorised Service Centre.
- Be careful when you remove the door from the appliance. The door is heavy!
- Clean regularly the appliance to prevent the deterioration of the surface material.
- Clean the appliance with a moist soft cloth. Only use neutral detergents. Do not use any abrasive products, abrasive cleaning pads, solvents or metal objects.
- If you use an oven spray, follow the safety instruction on it's packaging.
- Do not clean the catalytic enamel (if applicable) with any kind of detergent.

2.5 Internal lighting

WARNING!
Risk of electric shock.

- The type of light bulb or halogen lamp used for this appliance is for household appliances only. Do not use it for house lighting.
- Before replacing the lamp, disconnect the appliance from the power supply.
- Only use lamps with the same specifications.

2.6 Service

- To repair the appliance contact an Authorised Service Centre.
- Use original spare parts only.

2.7 Disposal

WARNING!
Risk of injury or suffocation.

- Disconnect the appliance from the mains supply.
- Cut off the mains electrical cable close to the appliance and dispose of it.
- Remove the door catch to prevent children or pets from becoming trapped in the appliance.

3. PRODUCT DESCRIPTION

3.1 General overview

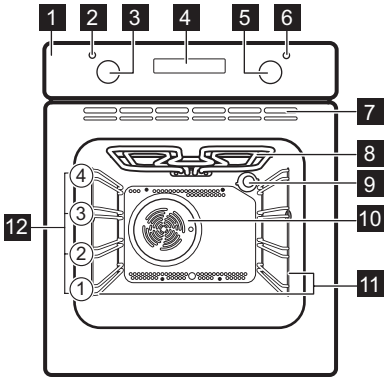

1 Control panel
2 Power lamp / symbol
3 Knob for the heating functions
4 Display
5 Control knob (for the temperature)
6 Temperature indicator / symbol
7 Air vents for the cooling fan
8 Heating element
9 Lamp
10 Fan
11 Shelf support, removable
12 Shelf positions

3.2 Accessories

- **Wire shelf**
  For cookware, cake tins, roasts.
- **Baking tray**
  For cakes and biscuits.
- **Grill- / Roasting pan**
  To bake and roast or as pan to collect fat.
- **Telescopic runners**
  For shelves and trays.

4. CONTROL PANEL

4.1 Buttons

Sensor field / Button	Function	Description
—	MINUS	To set the time.
⏲	CLOCK	To set a clock function.
+	PLUS	To set the time.

4.2 Display

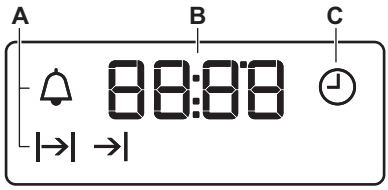

A. Clock functions
B. Timer
C. Clock function

5. BEFORE FIRST USE

WARNING!
Refer to Safety chapters.

To set the Time of day refer to "Clock functions" chapter.

5.1 Initial Cleaning

Remove all accessories and removable shelf supports from the oven.

Refer to "Care and cleaning" chapter.

Clean the oven and the accessories before first use.
Put the accessories and the removable shelf supports back to their initial position.

5.2 Preheating

Preheat the empty oven before first use.

1. Set the function .Set the maximum temperature.
2. Let the oven operate for 1 hour.
3. Set the function . Set the maximum temperature.
4. Let the oven operate for 15 minutes.
5. Set the function . Set the maximum temperature.
6. Let the oven operate for 15 minutes.
7. Turn off the oven and let it cool down.

Accessories can become hotter than usual. The oven can emit an odour and smoke. Make sure that the airflow in the room is sufficient.

6. DAILY USE

WARNING!
Refer to Safety chapters.

6.1 Setting a heating function

1. Turn the knob for the heating functions to select a heating function.
2. Turn the control knob to select the temperature.

The lamp turns on when the oven operates.

3. To turn off the oven, turn the knob for the heating functions to the off position.

6.2 Heating functions

Oven function	Application
0 Off position	The oven is off.
Light	To turn on the lamp without a cooking function.
True Fan Cooking	To bake on up to two shelf positions at the same time and to dry food. Set the temperature 20 - 40 °C lower than for Conventional Cooking.

Oven function	Application
 Moist Fan Baking	This function is designed to save energy during cooking. For the cooking instructions refer to "Hints and tips" chapter, Moist Fan Baking. The oven door should be closed during cooking so that the function is not interrupted and to ensure that the oven operates with the highest energy efficiency possible. When you use this function, the temperature in the cavity may differ from the set temperature. The heating power may be reduced. For general energy saving recommendations refer to "Energy Efficiency" chapter, Energy Saving.This function was used to comply with the energy efficiency class according to EN 60350-1.
 Bottom Heat	To bake cakes with crispy bottom and to preserve food.

Oven function	Application
 Defrost	To defrost food (vegetables and fruit). The defrosting time depends on the amount and size of the frozen food.
 Grilling	To grill flat food and to toast bread.
 Fast Grilling	To grill flat food in large quantities and to toast bread.
 Turbo Grilling	To roast larger meat joints or poultry with bones on one shelf position. To make gratins and to brown.
 Conventional Cooking (Top / Bottom Heat)	To bake and roast food on one shelf position.

7. CLOCK FUNCTIONS

7.1 Clock functions table

Clock function		Application
	TIME OF DAY	To set, change or check the time of day.
	DURATION	To set how long the appliance operates.
	END	To set when the appliance deactivates.
	TIME DELAY	To combine DURATION and END function.

Clock function		Application
🔔	MINUTE MINDER	To set countdown time. This function has no effect on the operation of the appliance. You can set the MINUTE MINDER at any time, also when the appliance is off.

7.2 Setting the time. Changing the time

You must set the time before you operate the oven.

The 🕘 flashes when you connect the appliance to the electrical supply, when there was a power cut or when the timer is not set.

Press the + or — to set the correct time.
After approximately five seconds, the flashing stops and the display shows the time of day you set.

To change the time of day press 🕛 again and again until 🕘 starts to flash.

7.3 Setting the DURATION

1. Set an oven function and temperature.
2. Press 🕛 again and again until |→| starts to flash.
3. Press + or — to set the DURATION time.

The display shows |→|.

4. When the time ends, |→| flashes and an acoustic signal sounds. The appliance deactivates automatically.
5. Press any button to stop the acoustic signal.
6. Turn the knob for the oven functions and the knob for the temperature to the off position.

7.4 Setting the END

1. Set an oven function and temperature.
2. Press 🕛 again and again until →| starts to flash.
3. Press + or — to set the time.

The display shows →|.

4. When the time ends, →| flashes and an acoustic signal sounds. The appliance deactivates automatically.
5. Press any button to stop the signal.
6. Turn the knob for the oven functions and the knob for the temperature to the off position.

7.5 Setting the TIME DELAY

1. Set an oven function and temperature.
2. Press 🕛 again and again until |→| starts to flash.
3. Press + or — to set the time for DURATION.
4. Press 🕛.
5. Press + or — to set the time for END.
6. Press 🕛 to confirm.

Appliance turns on automatically later on, works for the set DURATION time and stops at the set END time. At the set time an acoustic signal sounds.

7. The appliance deactivates automatically. Press any button to stop the signal.
8. Turn the knob for the oven functions and the knob for the temperature to the off position.

7.6 Setting the MINUTE MINDER

1. Press 🕛 again and again until 🔔 starts to flash.
2. Press + or — to set the necessary time.

The Minute Minder starts automatically after 5 seconds.

3. When the set time ends, an acoustic signal sounds. Press any button to stop the acoustic signal.
4. Turn the knob for the oven functions and the knob for the temperature to the off position.

7.7 Cancelling the clock functions

1. Press the ⏲ again and again until the necessary function indicator starts to flash.
2. Press and hold —.

The clock function goes out after some seconds.

8. USING THE ACCESSORIES

WARNING!
Refer to Safety chapters.

8.1 Inserting the accessories

Wire shelf:

Push the shelf between the guide bars of the shelf support and make sure that the feet point down.

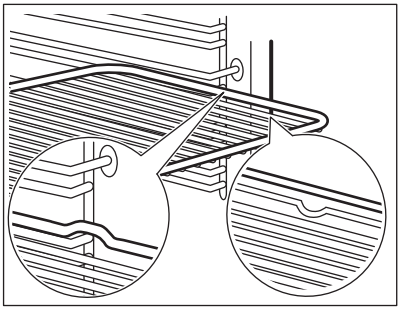

Baking tray/ Deep pan:

Push the baking tray / deep pan between the guide bars of the shelf support.

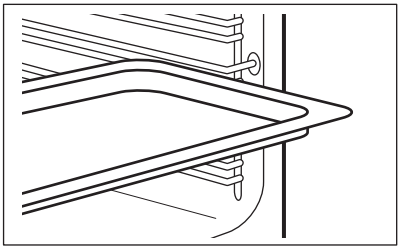

Wire shelf and baking tray / deep pan together:

Push the baking tray / deep pan between the guide bars of the shelf support and the wire shelf on the guide bars above.

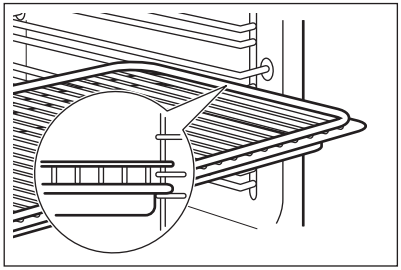

Small indentation at the top increase safety. The indentations are also anti-tip devices. The high rim around the shelf prevents cookware from slipping of the shelf.

8.2 Installing the telescopic runners

You can put the telescopic runners on each level.

Make sure that the two telescopic runners are on the same level.

1. Install the telescopic runners.

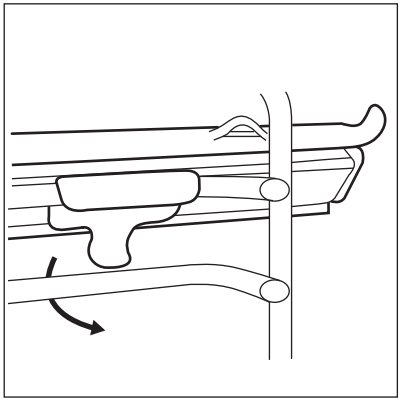

2. The stop element (A) which is at one end of the telescopic runner must point up.

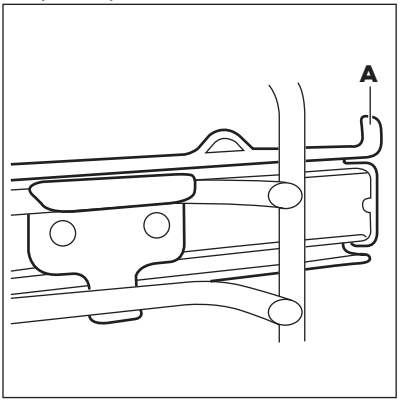

8.3 Telescopic Runners

With telescopic runners you can put in and remove the shelves more easily.

CAUTION!
Do not clean the telescopic runners in the dishwasher. Do not lubricate the telescopic runners.

1. Pull out the right and left hand telescopic runners.

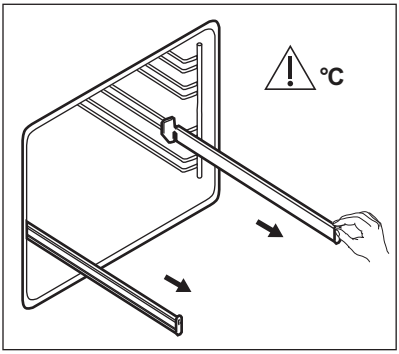

2. Put the wire shelf on the telescopic runners and carefully push them into the oven.

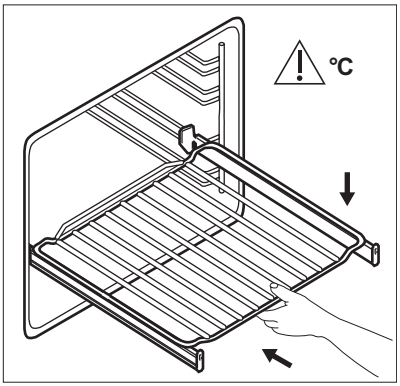

Make sure you push back the telescopic runners fully in the oven before you close the oven door.

9. ADDITIONAL FUNCTIONS

9.1 Cooling fan

When the oven operates, the cooling fan turns on automatically to keep the surfaces of the oven cool.

9.2 Safety thermostat

Incorrect operation of the oven or defective components can cause dangerous overheating. To prevent this, the oven has a safety thermostat which

interrupts the power supply. The oven turns on again automatically when the temperature drops.

10. HINTS AND TIPS

WARNING!
Refer to Safety chapters.

The temperature and baking times in the tables are guidelines only. They depend on the recipes and the quality and quantity of the ingredients used.

10.1 Cooking recommendations

The oven has four shelf positions.

Count the shelf positions from the bottom of the oven floor.

Your oven may bake or roast differently to the oven you had before. The below tables provide you with the standard settings for temperature, cooking time and shelf position.

If you cannot find the settings for a special recipe, look for the similar one.

The oven has a special system which circulates the air and constantly recycles the steam. With this system you can cook in a steamy environment and keep the food soft inside and crusty outside. It decreases the cooking time and energy consumption.

Baking cakes
Do not open the oven door before 3/4 of the set cooking time is up.

If you use two baking trays at the same time, keep one empty level between them.

Cooking meat and fish
Use a deep pan for very fatty food to prevent the oven from stains that can be permanent.

Leave the meat for approximately 15 minutes before carving so that the juice does not seep out.

To prevent too much smoke in the oven during roasting, add some water into the deep pan. To prevent the smoke condensation, add water each time after it dries up.

Cooking times
Cooking times depend on the type of food, its consistency, and volume.

Initially, monitor the performance when you cook. Find the best settings (heat setting, cooking time, etc.) for your cookware, recipes and quantities when you use this appliance.

10.2 Baking and roasting

Cakes

Food	Top / Bottom Heat		True Fan Cooking		Time (min)	Comments
	Temperature (°C)	Shelf position	Temperature (°C)	Shelf position		
Whisked recipes	170	2	160	2 (1 and 3)	45 - 60	In a cake mould
Shortbread dough	170	2	160	2 (1 and 3)	24 - 34	In a cake mould

Food	Top / Bottom Heat		True Fan Cooking		Time (min)	Comments
	Temperature (°C)	Shelf position	Temperature (°C)	Shelf position		
Butter-milk cheese cake	170	1	160	2	60 - 80	In a 26 cm cake mould
Apple cake (Apple pie)	170	1	160	2 (1 and 3)	100 - 120	In two 20 cm cake moulds on a wire shelf
Strudel	175	2	150	2	60 - 80	In a baking tray
Jam-tart	170	2	160	2	30 - 40	In a 26 cm cake mould
Fruit cake	170	2	155	2	60 - 70	In a 26 cm cake mould
Sponge cake (Fatless sponge cake)	170	2	160	2	35 - 45	In a 26 cm cake mould
Christmas cake / Rich fruit cake	170	2	160	2	50 - 60	In a 20 cm cake mould
Plum cake[1)]	170	2	160	2	50 - 60	In a bread tin
Small cakes	170	3	160	3 (1 and 3)	20 - 30	In a baking tray
Biscuits[1)]	150	3	150	3	20 - 30	In a baking tray
Meringues	100	3	100	3	90 - 120	In a baking tray
Buns[1)]	190	3	180	3	15 - 20	In a baking tray
Choux[1)]	190	3	180	3	25 - 35	In a baking tray

Food	Top / Bottom Heat		True Fan Cooking		Time (min)	Comments
	Temperature (°C)	Shelf position	Temperature (°C)	Shelf position		
Plate tarts	180	3	170	2	45 - 70	In a 20 cm cake mould
Victoria sandwich	180	1 or 2	170	2 (left and right)	40 - 55	Left + right in a 20 cm cake mould

1) Preheat the oven for 10 minutes.

Bread and pizza

Food	Top / Bottom Heat		True Fan Cooking		Time (min)	Comments
	Temperature (°C)	Shelf position	Temperature (°C)	Shelf position		
White bread**1)**	190	1	190	1	60 - 70	1 - 2 pieces, 500 gr one piece
Rye bread	190	1	180	1	30 - 45	In a bread tin
Bread rolls**1)**	190	2	180	2 (1 and 3)	25 - 40	6 - 8 rolls in a baking tray
Pizza**1)**	190	1	190	1	20 - 30	On a deep pan
Scones**1)**	200	3	190	2	10 - 20	In a baking tray

1) Preheat the oven for 10 minutes.

Flans

Food	Top / Bottom Heat		True Fan Cooking		Time (min)	Comments
	Temperature (°C)	Shelf position	Temperature (°C)	Shelf position		
Pasta flan	180	2	180	2	40 - 50	In a mould
Vegetable flan	200	2	175	2	45 - 60	In a mould
Quiches	190	1	190	1	40 - 50	In a mould
Lasagne	200	2	200	2	25 - 40	In a mould
Cannelloni	200	2	190	2	25 - 40	In a mould

Food	Top / Bottom Heat		True Fan Cooking		Time (min)	Comments
	Temperature (°C)	Shelf position	Temperature (°C)	Shelf position		
Yorkshire pudding[1)]	220	2	210	2	20 - 30	6 pudding mould

1) Preheat the oven for 10 minutes.

Meat

Food	Top / Bottom Heat		True Fan Cooking		Time (min)	Comments
	Temperature (°C)	Shelf position	Temperature (°C)	Shelf position		
Beef	200	2	190	2	50 - 70	On a wire shelf and a deep pan
Pork	180	2	180	2	90 - 120	On a wire shelf and a deep pan
Veal	190	2	175	2	90 - 120	On a wire shelf and a deep pan
English roast beef rare	210	2	200	2	44 - 50	On a wire shelf and a deep pan
English roast beef medium	210	2	200	2	51 - 55	On a wire shelf and a deep pan
English roast beef well done	210	2	200	2	55 - 60	On a wire shelf and a deep pan
Shoulder of pork	180	2	170	2	120 - 150	On a deep pan
Shin of pork	180	2	160	2	100 - 120	2 pieces on a deep an
Lamb	190	2	190	2	110 - 130	Leg

Food	Top / Bottom Heat		True Fan Cooking		Time (min)	Comments
	Temperature (°C)	Shelf position	Temperature (°C)	Shelf position		
Chicken	200	2	200	2	70 - 85	Whole on a deep pan
Turkey	180	1	160	1	210 - 240	Whole on a deep pan
Duck	175	2	160	2	120 - 150	Whole on a deep pan
Goose	175	1	160	1	150 - 200	Whole on a deep pan
Rabbit	190	2	175	2	60 - 80	Cut in pieces
Hare	190	2	175	2	150 - 200	Cut in pieces
Pheasant	190	2	175	2	90 - 120	Whole on a deep pan

Fish

Food	Top / Bottom Heat		True Fan Cooking		Time (min)	Comments
	Temperature (°C)	Shelf position	Temperature (°C)	Shelf position		
Trout / Sea bream	190	2	175	2 (1 and 3)	40 - 55	3 - 4 fishes
Tuna fish / Salmon	190	2	175	2 (1 and 3)	35 - 60	4 - 6 fillets

10.3 Grilling

Set the temperature to 250 °C.

Preheat the oven for 10 minutes.

Use the third position.

Food	Quantity		Time (min)	
	Pieces	Quantity (kg)	1st side	2nd side
Fillet steaks	4	0.8	12 - 15	12 - 14

Food	Quantity		Time (min)	
	Pieces	Quantity (kg)	1st side	2nd side
Beef steaks	4	0.6	10 - 12	6 - 8
Sausages	8	-	12 - 15	10 - 12
Pork chops	4	0.6	12 - 16	12 - 14
Chicken (cut in 2)	2	1	30 - 35	25 - 30
Kebabs	4	-	10 - 15	10 - 12
Breast of chicken	4	0.4	12 - 15	12 - 14
Hamburger	6	0.6	20 - 30	-
Fish fillet	4	0.4	12 - 14	10 - 12
Toasted sandwiches	4 - 6	-	5 - 7	-
Toast	4 - 6	-	2 - 4	2 - 3

10.4 Turbo Grilling

Use the third shelf position.

Set the maximum temperature of 200 °C.

Food	Quantity		Time (min)	
	Pieces	(kg)	1st side	2nd side
Rolled joints (turkey)	1	1	30 - 40	20 - 30
Chicken (cut in two)	2	1	25 - 30	20 - 30
Chicken drum-sticks	6	-	15 - 20	15 - 18
Quail	4	0.5	25 - 30	20 - 25
Vegetable gratin	-	-	20 - 25	-
Scallops	-	-	15 - 20	-
Mackerel	2 - 4	-	15 - 20	10 - 15
Fish slices	4 - 6	0.8	12 - 15	8 - 10

10.5 Moist Fan Baking

For best results follow suggestions listed in the table below.

Food	Accessories	Temperature (°C)	Shelf position	Time (min)
Sweet rolls, 12 pieces	baking tray or dripping pan	180	2	35 - 40
Rolls, 9 pieces	baking tray or dripping pan	180	2	35 - 40
Pizza, frozen, 0.35 kg	wire shelf	220	2	35 - 40
Swiss roll	baking tray or dripping pan	170	2	30 - 40
Brownie	baking tray or dripping pan	180	2	30 - 40
Soufflè, 6 pieces	ceramic ramekins on wire shelf	200	3	30 - 40
Sponge flan base	flan base tin on wire shelf	170	2	20 - 30
Victoria Sandwich	baking dish on wire shelf	170	2	35 - 45
Poached fish, 0.3 kg	baking tray or dripping pan	180	3	35 - 45
Whole fish, 0.2 kg	baking tray or dripping pan	180	3	35 - 45
Fish fillet, 0.3 kg	pizza pan on wire shelf	180	3	35 - 45
Pouched meat, 0.25 kg	baking tray or dripping pan	200	3	40 - 50
Shashlik, 0.5 kg	baking tray or dripping pan	200	3	25 - 35
Cookies, 16 pieces	baking tray or dripping pan	180	2	20 - 30
Macaroons, 20 pieces	baking tray or dripping pan	180	2	40 - 45
Muffins, 12 pieces	baking tray or dripping pan	170	2	30 - 40
Savory pastry, 16 pieces	baking tray or dripping pan	170	2	35 - 45
Short crust biscuits, 20 pieces	baking tray or dripping pan	150	2	40 - 50
Tartlets, 8 pieces	baking tray or dripping pan	170	2	20 - 30

Food	Accessories	Temperature (°C)	Shelf position	Time (min)
Poached vegetables, 0.4 kg	baking tray or dripping pan	180	3	35 - 40
Vegetarian omelette	pizza pan on wire shelf	200	3	30 - 45
Vegetables, mediterrean 0.7 kg	baking tray or dripping pan	180	4	35 - 40

10.6 Defrost

Food	Quantity (kg)	Defrosting time (min)	Further defrosting time (min)	Comments
Chicken	1.0	100 - 140	20 - 30	Place the chicken on an upturned saucer placed on a large plate. Turn halfway through.
Meat	1.0	100 - 140	20 - 30	Turn halfway through.
Meat	0.5	90 - 120	20 - 30	Turn halfway through.
Trout	0.15	25 - 35	10 - 15	-
Strawberries	0.3	30 - 40	10 - 20	-
Butter	0.25	30 - 40	10 - 15	-
Cream	2 x 0.2	80 - 100	10 - 15	Cream can also be whipped when still slightly frozen in places.
Gateau	1.4	60	60	-

10.7 Information for test institutes

Tests according to IEC 60350-1.

Food	Function	Accessories	Shelf position	Temperature (°C)	Time (min)	Comments
Small cake	Conventional Cooking	Baking tray	3	170	20 - 30	Put 20 small cakes per one baking tray.

Food	Function	Accessories	Shelf position	Temperature (°C)	Time (min)	Comments
Apple pie	Conventional Cooking	Wire shelf	1	170	80 - 120	Use 2 tins (20 cm diameter), diagonally shifted.
Sponge cake	Conventional Cooking	Wire shelf	2	170	35 - 45	Use a cake mould (26 cm diameter).
Short bread	Conventional Cooking	Baking tray	3	150	20 - 35	Preheat the oven for 10 minutes.
Toast 4 - 6 pieces	Grilling	Wire shelf	3	max.	2 - 4 minutes first side; 2 - 3 minutes second side	Preheat the oven for 3 minutes.
Beef burger 6 pieces, 0.6 kg	Grilling	Wire shelf and dripping pan	3	max.	20 - 30	Put the wire shelf on the third level and the dripping pan on the second level of the oven. Turn the food halfway through the cooking time. Preheat the oven for 3 minutes.

11. CARE AND CLEANING

WARNING!
Refer to Safety chapters.

11.1 Notes on cleaning

Clean the front of the oven with a soft cloth with warm water and a mild cleaning agent.

To clean metal surfaces, use a dedicated cleaning agent.

Clean the oven interior after each use. Fat accumulation or other food remains may result in a fire. The risk is higher for the grill pan.

Clean all accessories after each use and let them dry. Use a soft cloth with warm water and a cleaning agent. Do not clean the accessories in the dishwasher.

Clean stubborn dirt with a special oven cleaner. Do not apply oven cleaner on the catalytic surfaces.

If you have nonstick accessories, do not clean them using aggressive agents, sharp-edged objects or a dishwasher. It can cause damage to the nonstick coating.

Moisture can condense in the oven or on the door glass panels. To decrease the condensation, operate the oven for 10 minutes before cooking. Clean the moisture from the cavity after each use.

11.2 Stainless steel or aluminium ovens

Clean the oven door with a damp cloth or sponge only. Dry it with a soft cloth.

Do not use steel wool, acids or abrasive materials as they can damage the oven surface. Clean the oven control panel with the same precautions.

11.3 Cleaning the door gasket

Regularly do a check of the door gasket. The door gasket is around the frame of the oven cavity. Do not use the oven if the door gasket is damaged. Contact an Authorised Service Centre.

To clean the door gasket, refer to the general information about cleaning.

11.4 Removing the shelf supports / catalytic panels

To clean the oven, remove the shelf supports / catalytic panels.

CAUTION!
Be careful when you remove the shelf supports. The catalytic panels are not attached to the oven walls and can fall out when you remove the shelf supports.

1. Pull the front of the shelf support away from the side wall. Hold the rear shelf runners and catalytic panel in place with the other hand.

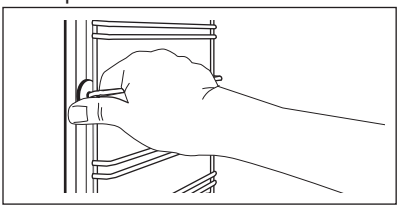

2. Pull the rear end of the shelf support away from the side wall and remove it.

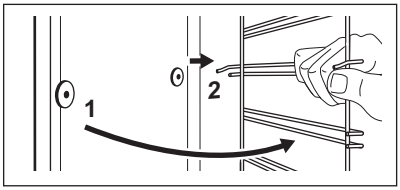

Install the removed accessories in the opposite sequence.

The retaining pins on the telescopic runners must point to the front.

11.5 Catalytic cleaning

The cavity with a catalytic coating is self-cleaning. It absorbs fat.

Before you turn on the catalytic cleaning:

- remove all the accessories .
- clean the oven floor with warm water and mild detergent.
- clean the inner door glass with warm water and soft cloth.

1. Set the function .
2. Set the oven temperature to 250 °C and let the oven operate for 1 hour.
3. Turn off the oven.
4. When the oven cools down, clean the cavity with a wet soft cloth.

Spots or discolouration of the catalytic coating have no effect on Catalytic cleaning.

11.6 Removing and installing door

The oven door has two glass panels. You can remove the oven door and the internal glass panel to clean it. Read the whole "Removing and installing door" instruction before you remove the glass panels.

The oven door may close if you try to remove the internal glass panel before you remove the oven door.

CAUTION!
Do not use the oven without the internal glass panel.

1. Open the door fully and hold both hinges.

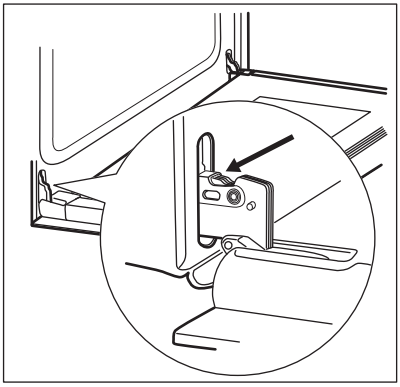

2. Lift and turn the levers fully on both hinges.

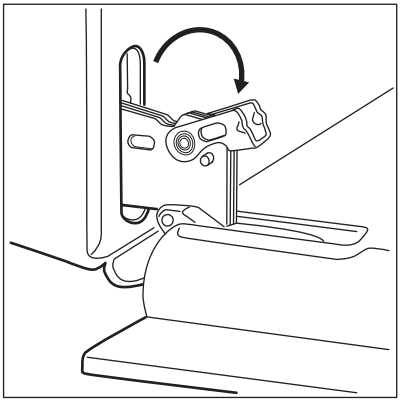

3. Close the oven door halfway to the first opening position. Then lift and pull forward and remove the door from its seat.

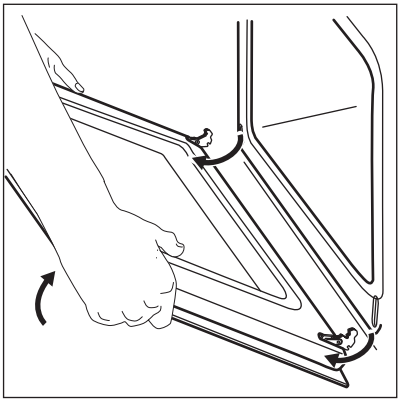

4. Put the door on a soft cloth on a stable surface.

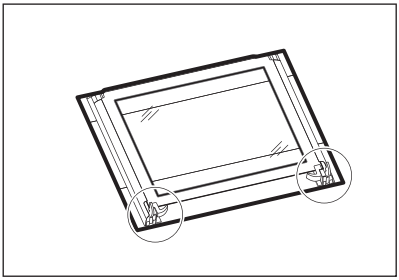

5. Release the locking system to remove the internal glass panel.

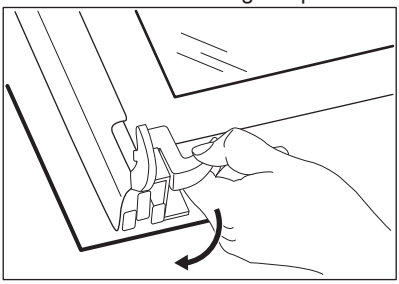

6. Turn the two fasteners by 90° and remove them from their seats.

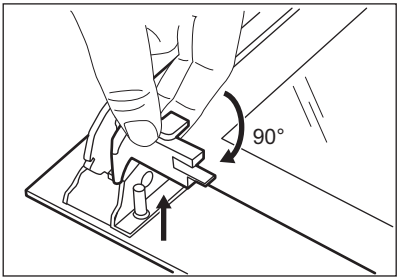

7. First lift carefully and then remove the glass panel.

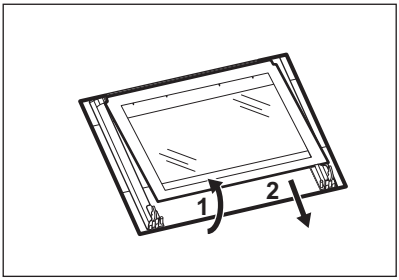

8. Clean the glass panels with water and soap. Dry the glass panels

carefully. Do not clean the glass panels in the dishwasher.

When the cleaning is completed, install the glass panel and the oven door.

When installed correctly the door trim clicks.

Make sure that you install the internal glass panel in the seats correctly.

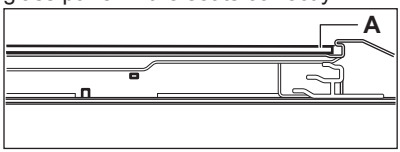

11.7 Replacing the lamp

WARNING!
Risk of electric shock.
The lamp can be hot.

1. Turn off the oven.

Wait until the oven is cooled down.

2. Disconnect the oven from the mains.
3. Put a cloth on the bottom of the cavity.

The back lamp

1. Turn the lamp glass cover to remove it.
2. Clean the glass cover.
3. Replace the lamp with a suitable 300 °C heat-resistant lamp.
4. Install the glass cover.

12. TROUBLESHOOTING

WARNING!
Refer to Safety chapters.

12.1 What to do if...

Problem	Possible cause	Remedy
The oven does not heat up.	The oven is deactivated.	Activate the oven.
The oven does not heat up.	The clock is not set.	Set the clock.
The oven does not heat up.	The necessary settings are not set.	Make sure that the settings are correct.
The oven does not heat up.	The fuse is blown.	Make sure that the fuse is the cause of the malfunction. If the fuse is blown again and again, contact a qualified electrician.
The lamp does not operate.	The lamp is defective.	Replace the lamp.
Steam and condensation settle on the food and in the cavity of the oven.	You left the dish in the oven for too long.	Do not leave the dishes in the oven for longer than 15 - 20 minutes after the cooking process ends.
The display shows "12.00".	There was a power cut.	Reset the clock.

12.2 Service data

If you cannot find a solution to the problem yourself, contact your dealer or an Authorised Service Centre.

The necessary data for the service centre is on the rating plate. The rating plate is on the front frame of the oven cavity. Do not remove the rating plate from the oven cavity.

We recommend that you write the data here:	
Model (MOD.)	.....
Product number (PNC)	.....
Serial number (S.N.)	.....

13. INSTALLATION

WARNING!
Refer to Safety chapters.

13.1 Building In

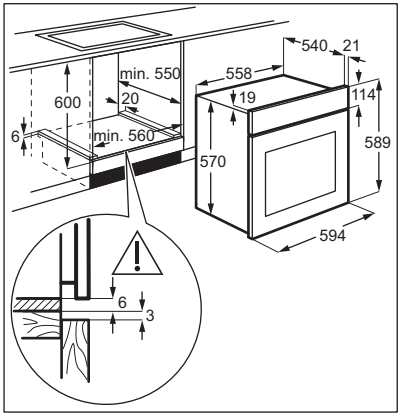

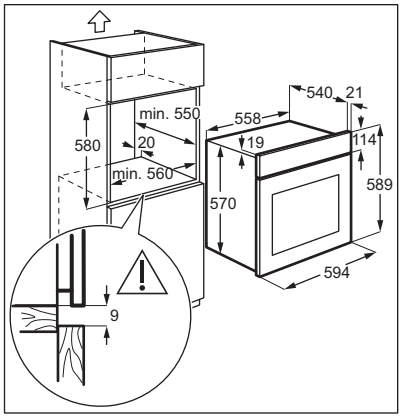

13.2 Securing the appliance to the cabinet

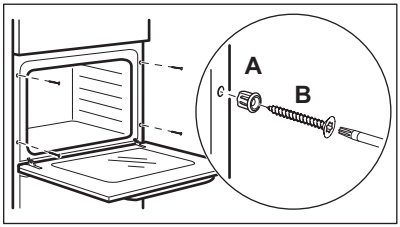

13.3 Electrical installation

The manufacturer is not responsible if you do not follow the safety precautions from the Safety chapters.

This appliance is supplied only with a main cable.

13.4 Cable

Cable types applicable for installation or replacement:

H07 RN-F, H05 RN-F, H05 RRF, H05 VV-F, H05 V2V2-F (T90), H05 BB-F

For the section of the cable refer to the total power on the rating plate. You can also refer to the table:

Total power (W)	Section of the cable (mm^2)
maximum 1380	3 x 0.75
maximum 2300	3 x 1
maximum 3680	3 x 1.5

The earth cord (green / yellow cable) must be 2 cm longer than phase and neutral cables (blue and brown cables).

14. ENERGY EFFICIENCY

14.1 Product Fiche and information according to EU 65-66/2014

Supplier's name	Electrolux
Model identification	EZA5420AOK EZA5420AOW
Energy Efficiency Index	94.9
Energy efficiency class	A

Energy consumption with a standard load, conventional mode	0.85 kWh/cycle	
Energy consumption with a standard load, fan-forced mode	0.75 kWh/cycle	
Number of cavities	1	
Heat source	Electricity	
Volume	57 l	
Type of oven	Built-In Oven	
Mass	EZA5420AOK	29.6 kg
	EZA5420AOW	29.4 kg

EN 60350-1 - Household electric cooking appliances - Part 1: Ranges, ovens, steam ovens and grills - Methods for measuring performance.

14.2 Energy saving

The oven contains features which help you save energy during everyday cooking.

General hints
Make sure that the oven door is closed properly when the oven operates. Do not open the door too often during cooking. Keep the door gasket clean and make sure it is well fixed in its position.

Use metal dishes to improve energy saving.

When possible, do not preheat the oven before you put the food inside.

When the cooking duration is longer than 30 minutes, reduce the oven temperature to minimum 3 - 10 minutes before the end of the cooking time, depending on the duration of the cooking. The residual heat inside the oven will continue to cook.

Use the residual heat to warm up other dishes.

Keep breaks between baking as short as possible when you prepare few dishes at one time.

Cooking with fan
When possible, use the cooking functions with fan to save energy.

Keep food warm
Choose the lowest possible temperature setting to use residual heat and keep a meal warm.

Moist Fan Baking
Function designed to save energy during cooking.

15. ENVIRONMENTAL CONCERNS

Recycle materials with the symbol . Put the packaging in relevant containers to recycle it. Help protect the environment and human health by recycling waste of electrical and electronic appliances. Do not dispose of appliances marked with the symbol with the household waste. Return the product to your local recycling facility or contact your municipal office.

www.electrolux.com/shop



867348212-A-262018

CE