Galaxy VM

Classic Battery Cabinet

Installation

GVMCBCABWEL

12/2015



www.schneider-electric.com

Legal Information

The Schneider Electric brand and any registered trademarks of Schneider Electric Industries SAS referred to in this guide are the sole property of Schneider Electric SA and its subsidiaries. They may not be used for any purpose without the owner's permission, given in writing. This guide and its content are protected, within the meaning of the French intellectual property code (Code de la propriété intellectuelle français, referred to hereafter as "the Code"), under the laws of copyright covering texts, drawings and models, as well as by trademark law. You agree not to reproduce, other than for your own personal, noncommercial use as defined in the Code, all or part of this guide on any medium whatsoever without Schneider Electric's permission, given in writing. You also agree not to establish any hypertext links to this guide or its content. Schneider Electric does not grant any right or license for the personal and noncommercial use of the guide or its content, except for a non-exclusive license to consult it on an "as is" basis, at your own risk. All other rights are reserved.

Electrical equipment should be installed, operated, serviced, and maintained only by qualified personnel. No responsibility is assumed by Schneider Electric for any consequences arising out of the use of this material.

As standards, specifications, and designs change from time to time, please ask for confirmation of the information given in this publication.

Table of Contents

Important Safety Information 5
Safety Precautions 6
Electrical Safety 8
Battery Safety 9
Specifications 10
Classic Battery Cabinet Specifications 10
Trip Settings for Battery Breaker 10
Battery Requirements 10
Recommended Cable Sizes 10
Torque Specifications 11
Classic Battery Cabinet Weights and Dimensions 11
Remove the Classic Battery Cabinet from the Pallet 12
Position the Classic Battery Cabinet 15
Mount the Front Anchoring Bracket on the Classic Battery Cabinet 18
Connect the Power Cables 19
Connect the Power Cables in a Bottom Cable Entry System 19
Connect the Power Cables in a Top Cable Entry System 22
Install and Connect Batteries in the Classic Battery Cabinet 25
Connect the Signal Cables 27

Important Safety Information

Read these instructions carefully and look at the equipment to become familiar with it before trying to install, operate, service or maintain it. The following safety messages may appear throughout this manual or on the equipment to warn of potential hazards or to call attention to information that clarifies or simplifies a procedure.



The addition of this symbol to a “Danger” or “Warning” safety message indicates that an electrical hazard exists which will result in personal injury if the instructions are not followed.



This is the safety alert symbol. It is used to alert you to potential personal injury hazards. Obey all safety messages with this symbol to avoid possible injury or death.

⚠DANGER

DANGER indicates a hazardous situation which, if not avoided, **will result in** death or serious injury.

Failure to follow these instructions will result in death or serious injury.

⚠WARNING

WARNING indicates a hazardous situation which, if not avoided, **could result in** death or serious injury.

Failure to follow these instructions can result in death, serious injury, or equipment damage.

⚠CAUTION

CAUTION indicates a hazardous situation which, if not avoided, **could result in** minor or moderate injury.

Failure to follow these instructions can result in injury or equipment damage.

NOTICE

NOTICE is used to address practices not related to physical injury. The safety alert symbol shall not be used with this type of safety message.

Failure to follow these instructions can result in equipment damage.

Please Note

Electrical equipment should only be installed, operated, serviced, and maintained by qualified personnel. No responsibility is assumed by Schneider Electric for any consequences arising out of the use of this material.

A qualified person is one who has skills and knowledge related to the construction, installation, and operation of electrical equipment and has received safety training to recognize and avoid the hazards involved.

Safety Precautions

⚠ DANGER

HAZARD OF ELECTRIC SHOCK, EXPLOSION, OR ARC FLASH

All safety instructions in this document must be read, understood and followed.

Failure to follow these instructions will result in death or serious injury.

⚠ DANGER

HAZARD OF ELECTRIC SHOCK, EXPLOSION, OR ARC FLASH

Read all instructions in the Installation Manual before installing or working on this UPS system.

Failure to follow these instructions will result in death or serious injury.

⚠ DANGER

HAZARD OF ELECTRIC SHOCK, EXPLOSION, OR ARC FLASH

Do not install the UPS system until all construction work has been completed and the installation room has been cleaned.

Failure to follow these instructions will result in death or serious injury.

⚠ DANGER

HAZARD OF ELECTRIC SHOCK, EXPLOSION, OR ARC FLASH

- The product must be installed according to the specifications and requirements as defined by Schneider Electric. It concerns in particular the external and internal protections (upstream breakers, battery breakers, cabling, etc.) and environmental requirements. No responsibility is assumed by Schneider Electric if these requirements are not respected.
- After the UPS system has been electrically wired, do not start up the system. Startup must only be performed by Schneider Electric.

Failure to follow these instructions will result in death or serious injury.

⚠ DANGER

HAZARD OF ELECTRIC SHOCK, EXPLOSION, OR ARC FLASH

The UPS System must be installed according to local and national regulations. Install the UPS according to:

- IEC 60364 (including 60364–4–41- protection against electric shock, 60364–4–42 - protection against thermal effect, and 60364–4–43 - protection against overcurrent), **or**
- NEC NFPA 70, **or**
- Canadian Electrical Code (C22.1, Part 1)

depending on which one of the standards apply in your local area.

Failure to follow these instructions will result in death or serious injury.

⚠DANGER

HAZARD OF ELECTRIC SHOCK, EXPLOSION, OR ARC FLASH

- Install the UPS system in a temperature controlled indoor environment free of conductive contaminants and humidity.
- Install the UPS system on a non-flammable, level and solid surface (e.g. concrete) that can support the weight of the system.

Failure to follow these instructions will result in death or serious injury.

⚠DANGER

HAZARD OF ELECTRIC SHOCK, EXPLOSION, OR ARC FLASH

The UPS is not designed for and must therefore not be installed in the following unusual operating environments:

- Damaging fumes
- Explosive mixtures of dust or gases, corrosive gases, or conductive or radiant heat from other sources
- Moisture, abrasive dust, steam or in an excessively damp environment
- Fungus, insects, vermin
- Salt-laden air or contaminated cooling refrigerant
- Pollution degree higher than 2 according to IEC 60664-1
- Exposure to abnormal vibrations, shocks, and tilting
- Exposure to direct sunlight, heat sources, or strong electromagnetic fields

Failure to follow these instructions will result in death or serious injury.

⚠DANGER

HAZARD OF ELECTRIC SHOCK, EXPLOSION, OR ARC FLASH

Do not drill or cut holes for cables or conduits with the gland plates installed and do not drill or cut holes in close proximity to the UPS.

Failure to follow these instructions will result in death or serious injury.

⚠WARNING

HAZARD OF ARC FLASH

Do not make mechanical changes to the product (including removal of cabinet parts or drilling/cutting of holes) that are not described in the Installation Manual.

Failure to follow these instructions can result in death, serious injury, or equipment damage.

⚠WARNING

HAZARD OF OVERHEATING

Respect the space requirements around the UPS system and do not cover the product's ventilation openings when the UPS system is in operation.

Failure to follow these instructions can result in death, serious injury, or equipment damage.

⚠WARNING

HAZARD OF EQUIPMENT DAMAGE

Do not connect the UPS output to regenerative load systems including photovoltaic systems and speed drives.

Failure to follow these instructions can result in death, serious injury, or equipment damage.

Electrical Safety

⚠DANGER

HAZARD OF ELECTRIC SHOCK, EXPLOSION, OR ARC FLASH

- Electrical equipment must be installed, operated, serviced, and maintained only by qualified personnel.
- Apply appropriate personal protective equipment (PPE) and follow safe electrical work practices.
- Turn off all power supplying the UPS system before working on or inside the equipment.
- Before working on the UPS system, check for hazardous voltage between all terminals including the protective earth.
- The UPS contains an internal energy source. Hazardous voltage can be present even when disconnected from the mains supply. Before installing or servicing the UPS system, ensure that the units are OFF and that mains and batteries are disconnected. Wait five minutes before opening the UPS to allow the capacitors to discharge.
- The UPS must be properly earthed/grounded and due to a high leakage current, the earthing/grounding conductor must be connected first.

Failure to follow these instructions will result in death or serious injury.

⚠DANGER

HAZARD OF ELECTRIC SHOCK, EXPLOSION, OR ARC FLASH

In systems where backfeed protection is not part of the standard design, an automatic isolation device (backfeed protection option or other device meeting the requirements of IEC/EN 62040–1 **or** UL1778 4th Edition – depending on which of the two standards apply to your local area) must be installed to prevent hazardous voltage or energy at the input terminals of the isolation device. The device must open within 15 seconds after the upstream power supply fails and must be rated according to the specifications.

Failure to follow these instructions will result in death or serious injury.

When the UPS input is connected through external isolators that, when opened, isolate the neutral or when the automatic backfeed isolation is provided external to the equipment or is connected to an IT power distribution system, a label must be fitted at the UPS input terminals, and on all primary power isolators installed remote from the UPS area and on external access points between such isolators and the UPS, by the user, displaying the following text (or equivalent in a language which is acceptable in the country in which the UPS system is installed):

⚠DANGER

HAZARD OF ELECTRIC SHOCK, EXPLOSION, OR ARC FLASH

Risk of Voltage Backfeed. Before working on this circuit: Isolate the UPS and check for hazardous voltage between all terminals including the protective earth.

Failure to follow these instructions will result in death or serious injury.

Battery Safety

⚠DANGER

HAZARD OF ELECTRIC SHOCK, EXPLOSION OR ARC FLASH

- Battery circuit breakers must be installed according to the specifications and requirements as defined by Schneider Electric.
- Servicing of batteries must only be performed or supervised by qualified personnel knowledgeable of batteries and the required precautions. Keep unqualified personnel away from batteries.
- Disconnect charging source prior to connecting or disconnecting battery terminals.
- Do not dispose of batteries in a fire as they can explode.
- Do not open, alter, or mutilate batteries. Released electrolyte is harmful to the skin and eyes. It may be toxic.

Failure to follow these instructions will result in death or serious injury.

⚠DANGER

HAZARD OF ELECTRIC SHOCK, EXPLOSION, OR ARC FLASH

Batteries can present a risk of electric shock and high short-circuit current. The following precautions must be observed when working on batteries

- Remove watches, rings, or other metal objects.
- Use tools with insulated handles.
- Wear protective glasses, gloves and boots.
- Do not lay tools or metal parts on top of batteries.
- Disconnect the charging source prior to connecting or disconnecting battery terminals.
- Determine if the battery is inadvertently grounded. If inadvertently grounded, remove source from ground. Contact with any part of a grounded battery can result in electric shock. The likelihood of such shock can be reduced if such grounds are removed during installation and maintenance (applicable to equipment and remote battery supplies not having a grounded supply circuit).

Failure to follow these instructions will result in death or serious injury.

⚠DANGER

HAZARD OF ELECTRIC SHOCK, EXPLOSION, OR ARC FLASH

When replacing batteries, always replace with the same type and number of batteries or battery packs. Refer to the label in the classic battery cabinet for information on batteries in your system.

Failure to follow these instructions will result in death or serious injury.

⚠CAUTION

RISK OF EQUIPMENT DAMAGE

- Wait until the system is ready to be powered up before installing batteries in the system. The time duration from battery installation until the UPS system is powered up must not exceed 72 hours or 3 days.
- Batteries must not be stored more than six months due to the requirement of recharging. If the UPS system remains de-energized for a long period, we recommend that you energize the UPS system for a period of 24 hours at least once every month. This charges the batteries, thus avoiding irreversible damage.

Failure to follow these instructions can result in injury or equipment damage.

Specifications

NOTICE

HAZARD OF EQUIPMENT DAMAGE

Refer to the UPS installation manual for detailed specifications of the UPS system.

Failure to follow these instructions can result in equipment damage.

Classic Battery Cabinet Specifications

⚠ DANGER

HAZARD OF ELECTRIC SHOCK, EXPLOSION OR ARC FLASH

The classic battery cabinet must only be used with the Galaxy VM UPS.

Failure to follow these instructions will result in death or serious injury.

Circuit breaker	LV438518 (NSX630S DC MP1 3P). Frame rating: 550 A
Maximum configuration	1 hour runtime for a 200 kVA system
Minimum short-circuit current to trip circuit breaker (A)	960
Maximum battery short-circuit level (kA)	35

Trip Settings for Battery Breaker

	160 kVA	**200 kVA**
Im (A)	Low setting (800 A)	Low setting (800 A)

Battery Requirements

	Classic Battery Cabinet
Battery type	Lead-acid, VRLA
Minimum flammability rating	HB
Number of blocks	12 V batteries: 38–42 per battery/string 6 V batteries: 76–84 per battery/string
Battery shelves	4 shelves sized 1057 x 767 mm
Maximum weight per shelf	460 kg
Maximum weight per cabinet	1600 kg
Height between battery shelves	340 mm
Maximum battery height including battery terminals	240 mm

Recommended Cable Sizes

All wiring must comply with all applicable national and/or electrical codes. The maximum allowable conductor size is 120 mm^2.

Cable sizes in this manual are based on installation method “C” in table 52–C2 of IEC 60364–5–52 with the following conditions:

- 90 °C conductors
- An ambient temperature of 30 °C
- Use of flexible copper cables

If the ambient temperature is greater than 30 °C, select larger conductors accordance with the correction factors of the IEC.

160 kVA	200 kVA
2 x 70 mm^2	2 x 95 mm^2

Torque Specifications

Bolt size	Torque
M4	1.7 Nm (1.25 lb-ft)
M5	2.5 Nm (1.84 lb-ft)
M6	5 Nm (3.69 lb-ft)
M8	17.5 Nm (12.91 lb-ft)
M10	30 Nm (22 lb-ft)
M12	50 Nm (36.87 lb-ft)
M14	75 Nm (55.31 lb-ft)

Classic Battery Cabinet Weights and Dimensions

	Weight kg	Height mm	Width mm	Depth mm
Classic battery cabinet (GVMCBCABWEL)	175	1970	1100	854

Remove the Classic Battery Cabinet from the Pallet

1. Remove the wooden plates from the bottom of the cabinet.

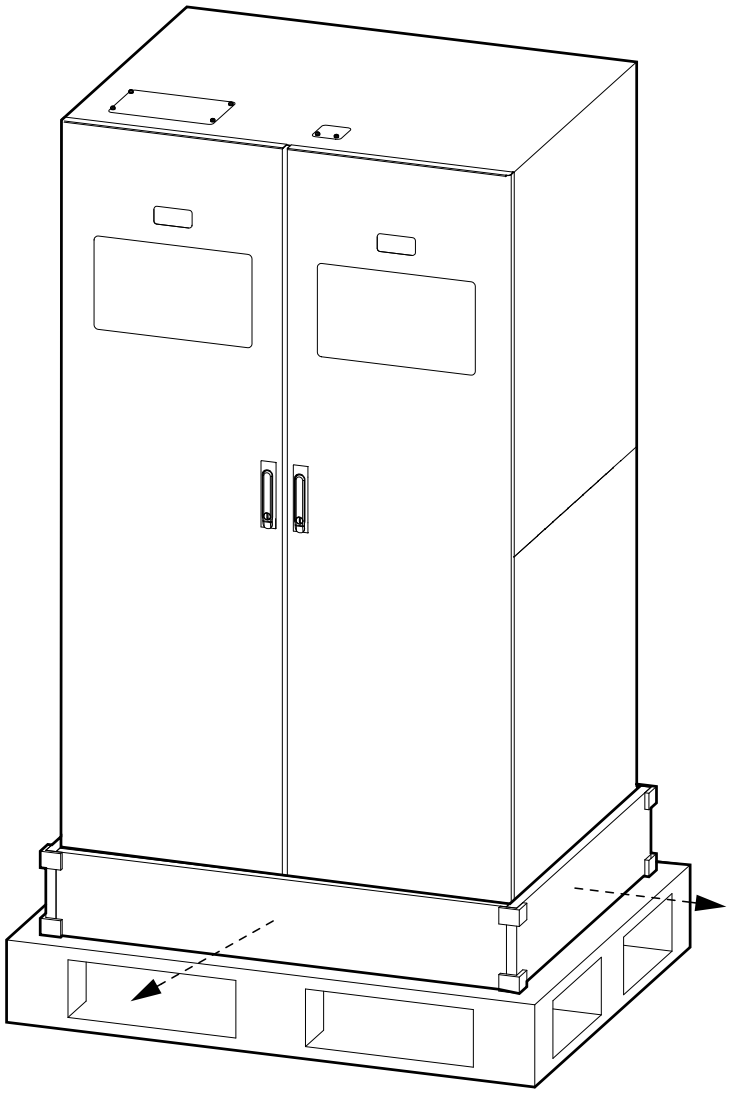

2. Remove the remaining packaging.

3. Remove the anchoring brackets. Save for later use.

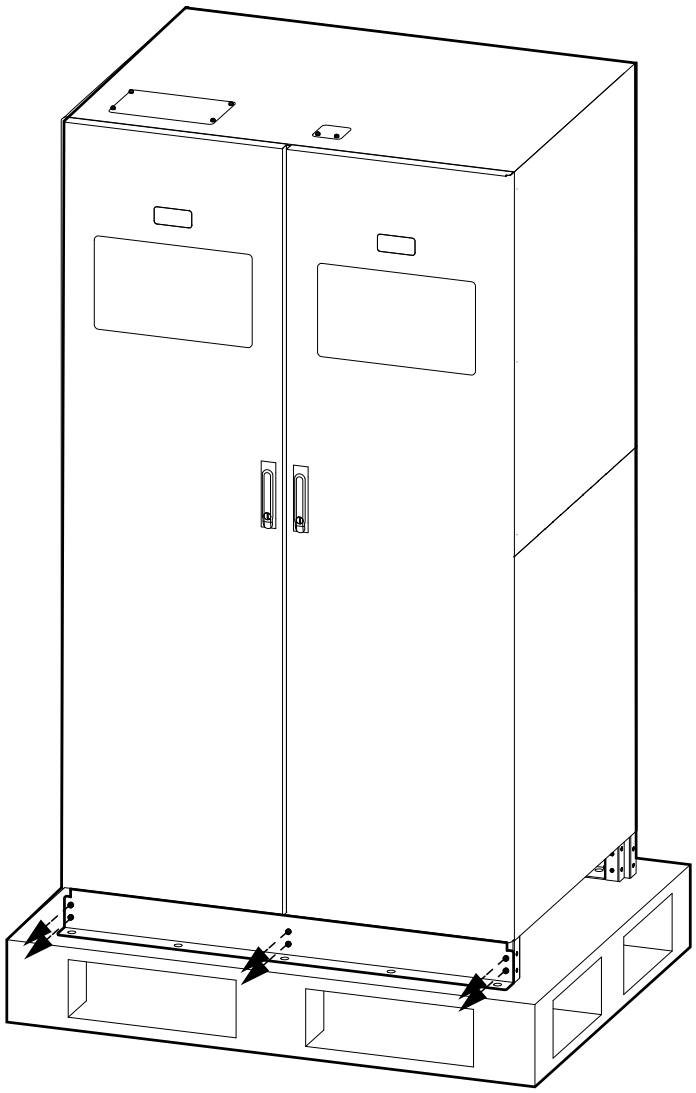

4. Lift the cabinet free of the pallet using a pallet jack or a forklift.

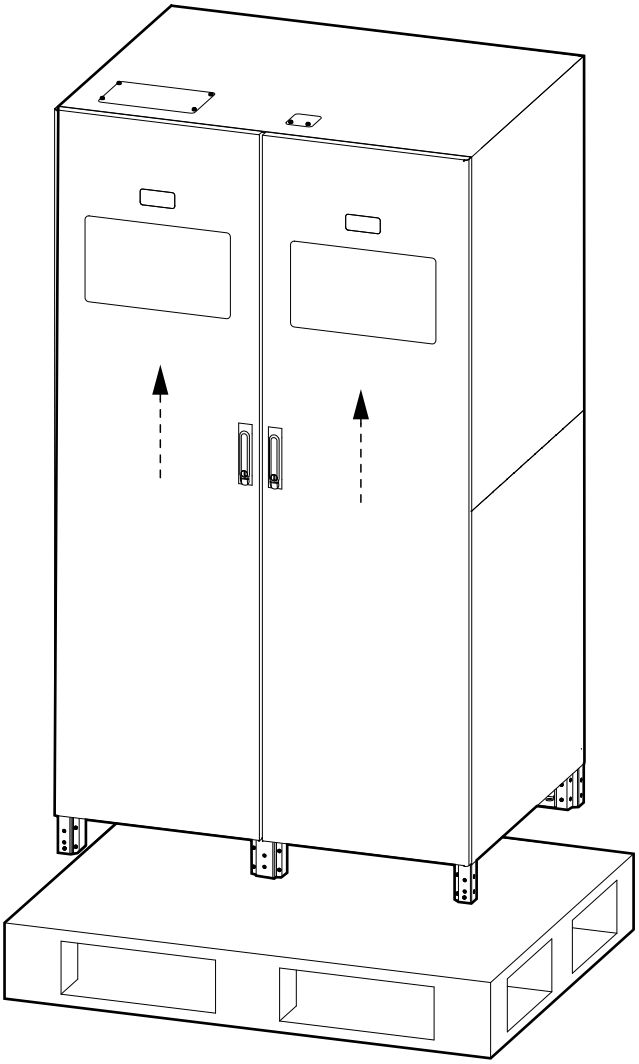

Position the Classic Battery Cabinet

⚠ DANGER

HAZARD OF TILTING

Minimum one rear anchoring bracket must be installed on each cabinet.

Failure to follow these instructions will result in death or serious injury.

⚠ DANGER

HAZARD OF ELECTRIC SHOCK, EXPLOSION, OR ARC FLASH

Leave the UPS system covered while making anchoring holes to prevent dust or other conductive parts in the system.

Failure to follow these instructions will result in death or serious injury.

1. Remove the side panels from the sides of the classic battery cabinet that will be placed up against an adjacent classic battery cabinet.

Front View of Two Classic Battery Cabinets

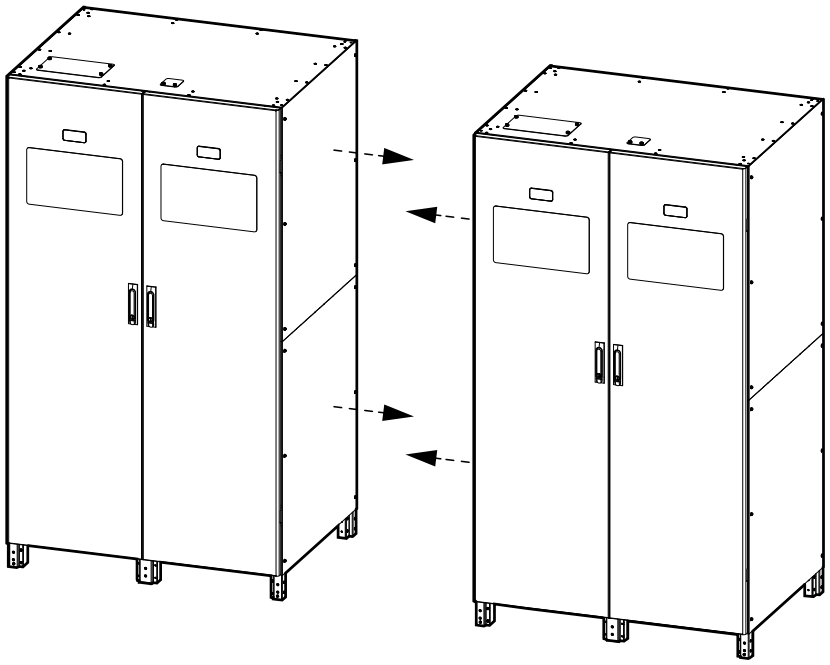

2. Install rear anchors on the rear feet of the classic battery cabinet.

⚠DANGER

HAZARD OF TILTING

Minimum one rear anchoring bracket must be installed on each cabinet.

Failure to follow these instructions will result in death or serious injury.

Rear View of the Classic Battery Cabinet

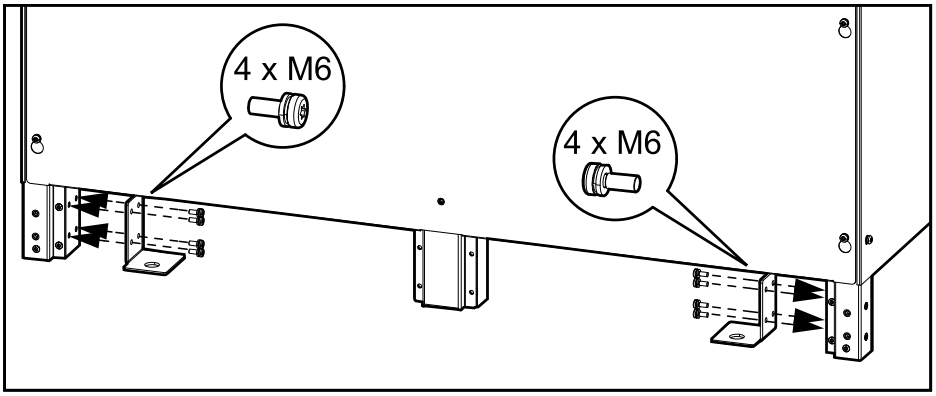

3. Position the classic battery cabinets in the final installation area.
4. Anchor the classic battery cabinets to the floor using the rear anchoring brackets.

   NOTE: Floor anchoring bolts are not provided.
5. Install the top baying brackets between all classic battery cabinets.

Front View of Two Classic Battery Cabinets

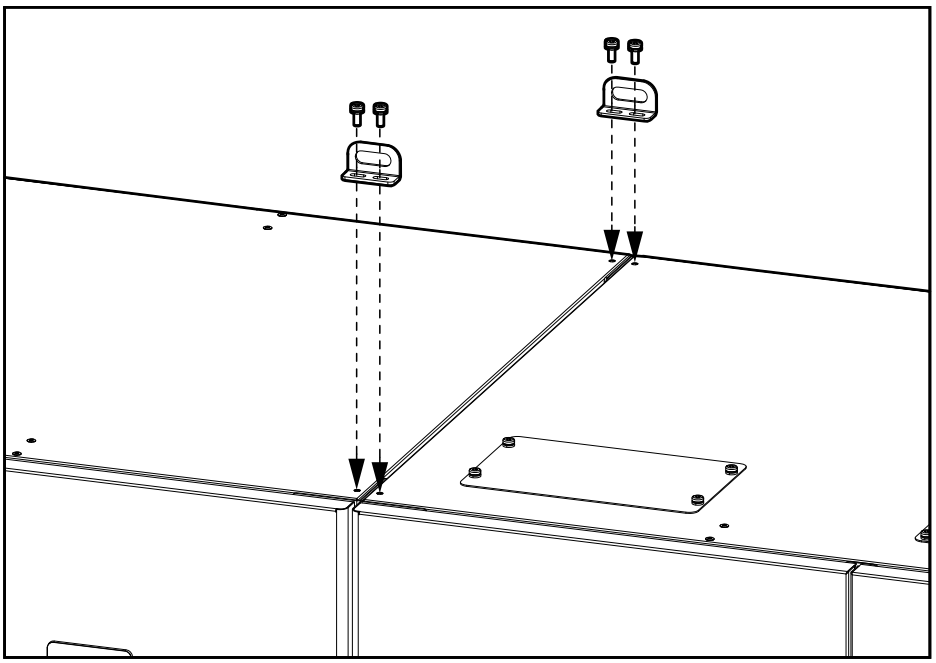

6. Remove the indicated four covers.

Front View of the Classic Battery Cabinet

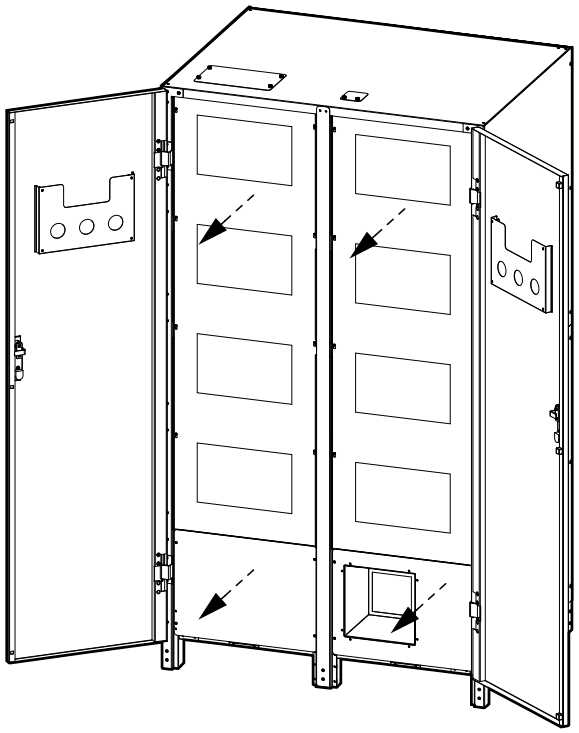

Mount the Front Anchoring Bracket on the Classic Battery Cabinet

1. Fasten the front anchoring bracket to the front of the classic battery cabinet.

   Front View of Classic Battery Cabinet

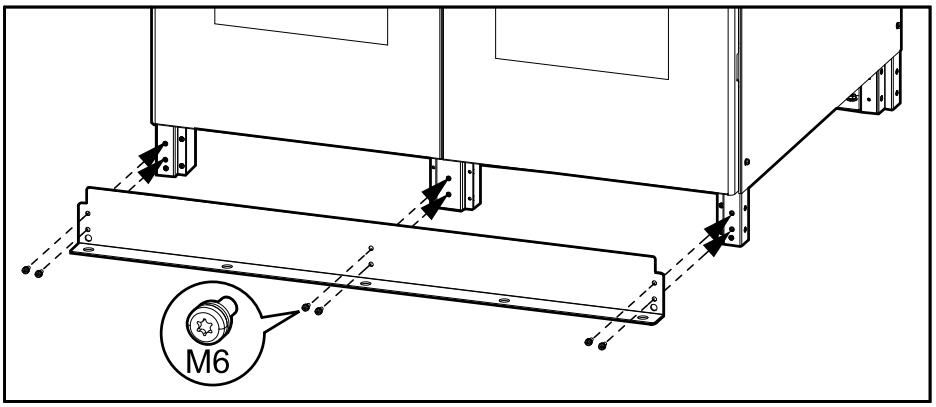

2. Anchor the bracket to the floor.

   NOTE: Floor anchoring bolts are not provided.

Connect the Power Cables

Connect the Power Cables in a Bottom Cable Entry System

⚠ DANGER

HAZARD OF ELECTRIC SHOCK, EXPLOSION, OR ARC FLASH

Do not drill or punch holes with the gland plates installed and do not drill or punch holes in close proximity to the UPS system.

Failure to follow these instructions will result in death or serious injury.

1. Install the battery breaker kit GVMBBK630EL in the bottom of the classic battery cabinet connected to the I/O cabinet.

Front View of the Classic Battery Cabinet

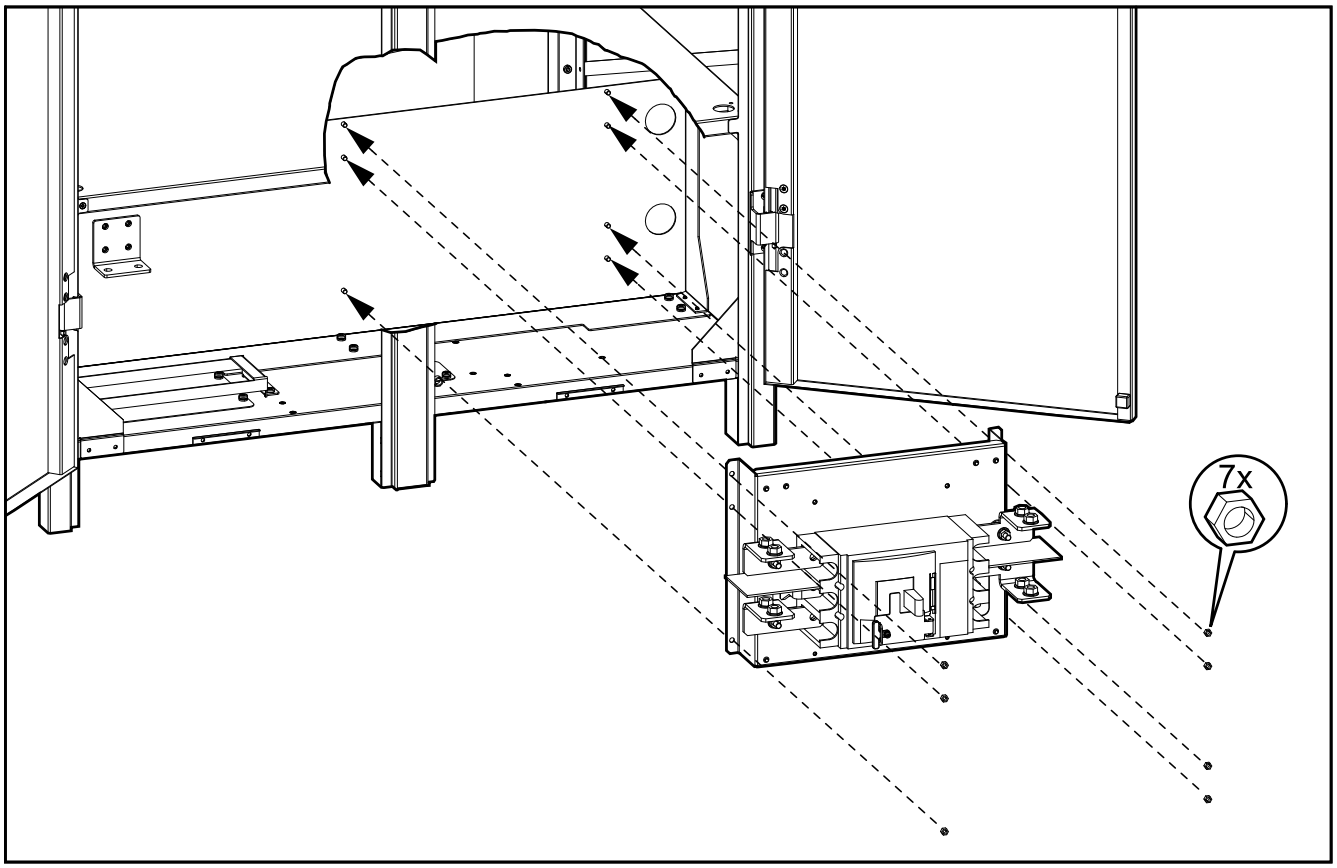

2. Install the signal board assembly in the bottom of the classic battery cabinet.

Front View of the Classic Battery Cabinet

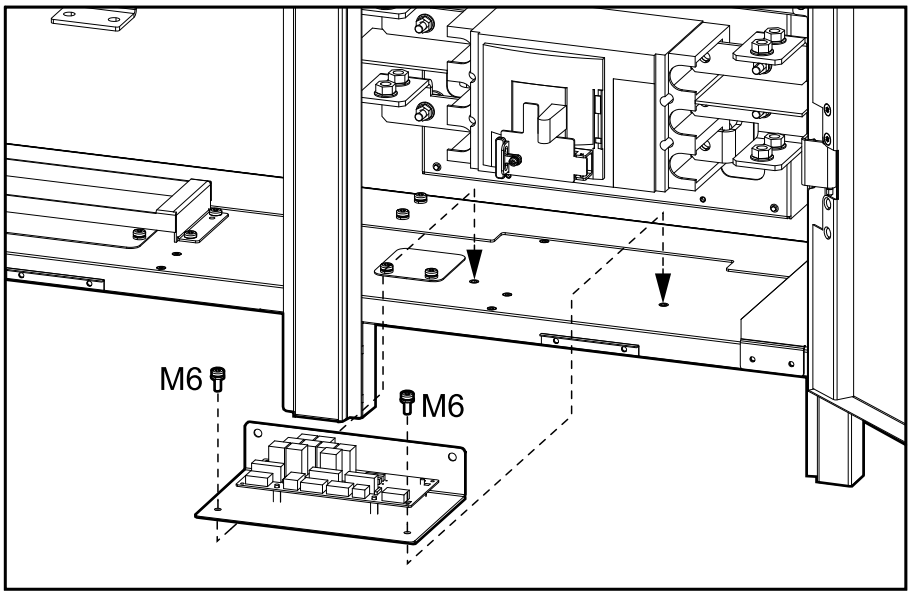

3. Remove the gland plates for (a) power cables and (b) signal cables.

Front View of the Classic Battery Cabinet

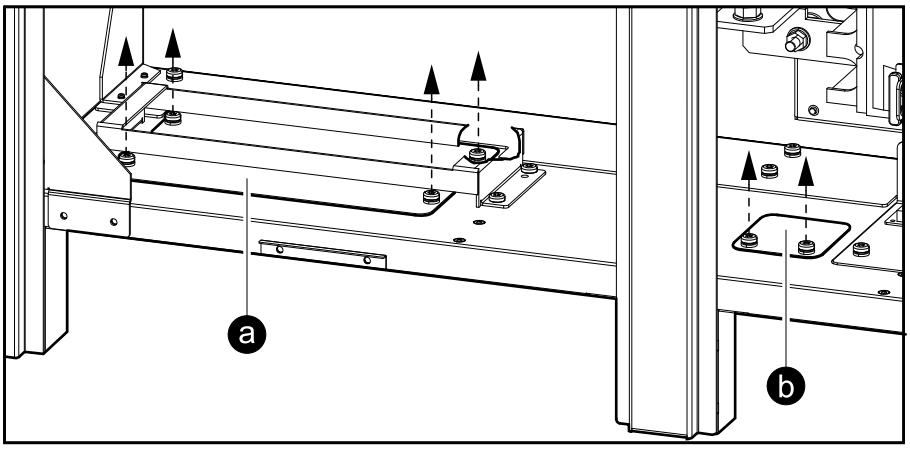

4. Drill or punch holes for power cables and signal cables in the gland plates.
5. Reinstall the gland plates.

⚠DANGER

HAZARD OF ELECTRIC SHOCK, EXPLOSION, OR ARC FLASH

Ensure that there are no sharp edges that can damage the cables.

Failure to follow these instructions will result in death or serious injury.

6. Ensure that the breaker is in the OFF position.

Front View of the Classic Battery Cabinet

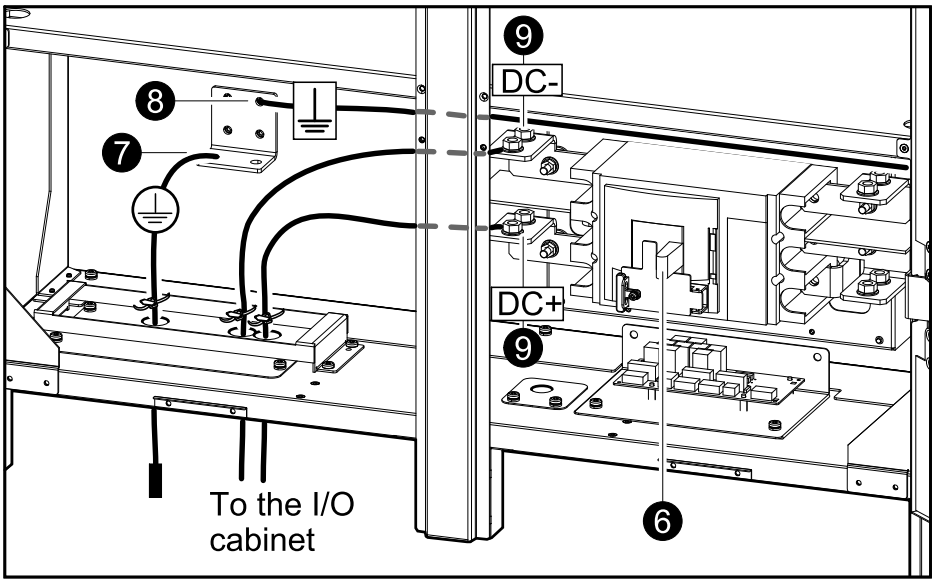

7. Connect the PE cable to the classic battery cabinet connected to the I/O cabinet.
8. If the system contains more than one battery cabinet, connect the PE cables between the classic battery cabinets.
9. Connect the DC+ and DC- cables from the I/O cabinet to the first classic battery cabinet.
10. Install the protection cover over the terminals on the left side of the battery breaker (connected to the I/O cabinet).

Front View of the Classic Battery Cabinet

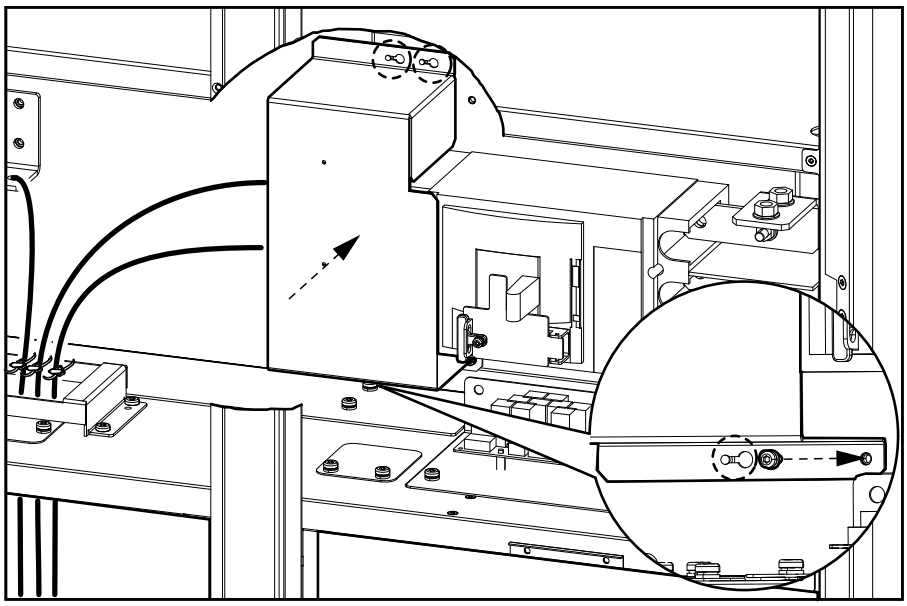

Connect the Power Cables in a Top Cable Entry System

⚠ DANGER

HAZARD OF ELECTRIC SHOCK, EXPLOSION, OR ARC FLASH

Do not drill or punch holes with the gland plates installed and do not drill or punch holes in close proximity to the UPS system.

Failure to follow these instructions will result in death or serious injury.

1. Remove the eight screws holding the breaker support plate. Save the screws for later use.

Front View of the Classic Battery Cabinet

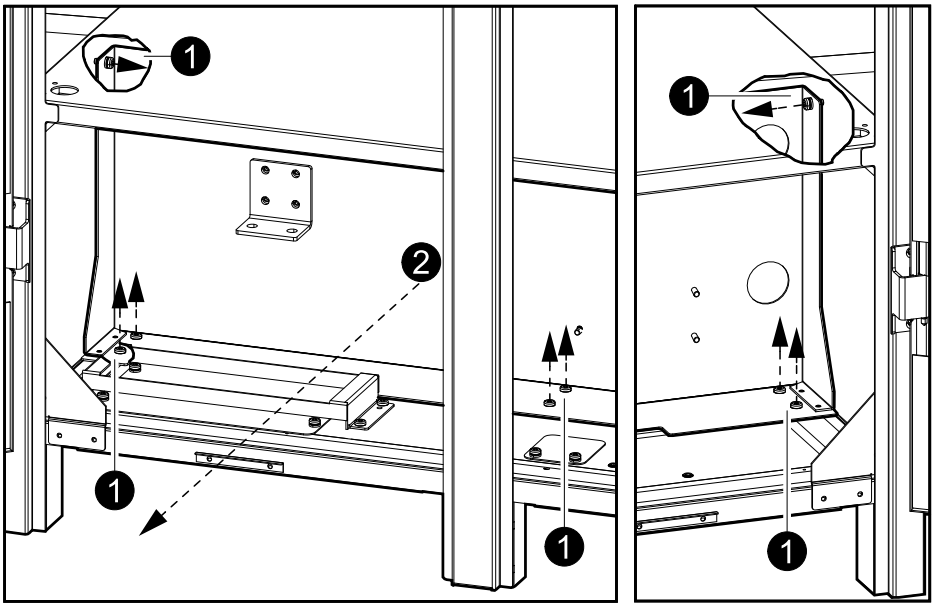

2. Remove the breaker support plate.
3. Install the breaker support plate on the top shelf of the classic battery cabinet.

Front View of the Classic Battery Cabinet

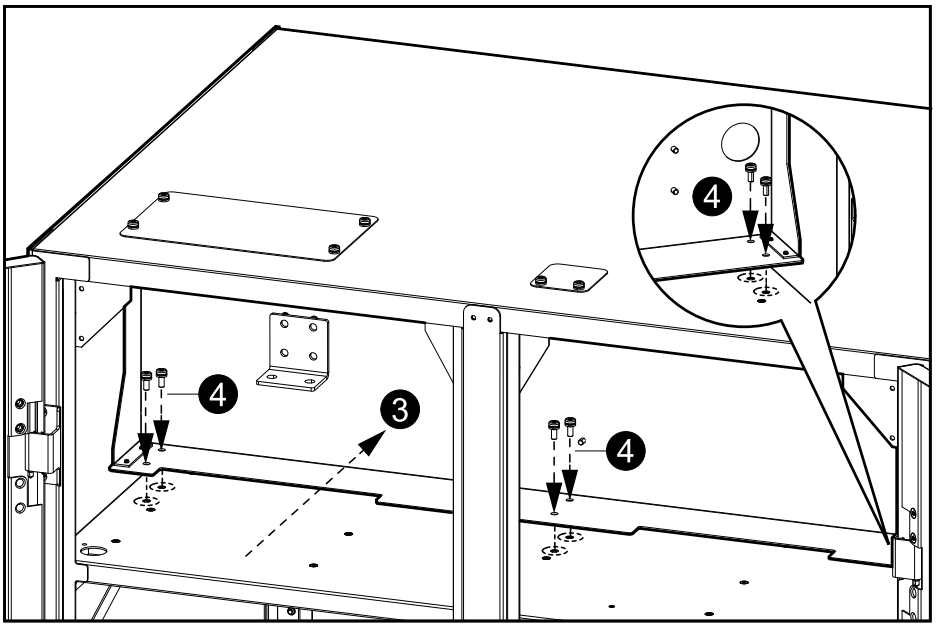

4. Fasten the bottom part of the breaker support plate with six screws.

5. Fasten the sides of the breaker support plate with two screws.

Front View of the Classic Battery Cabinet

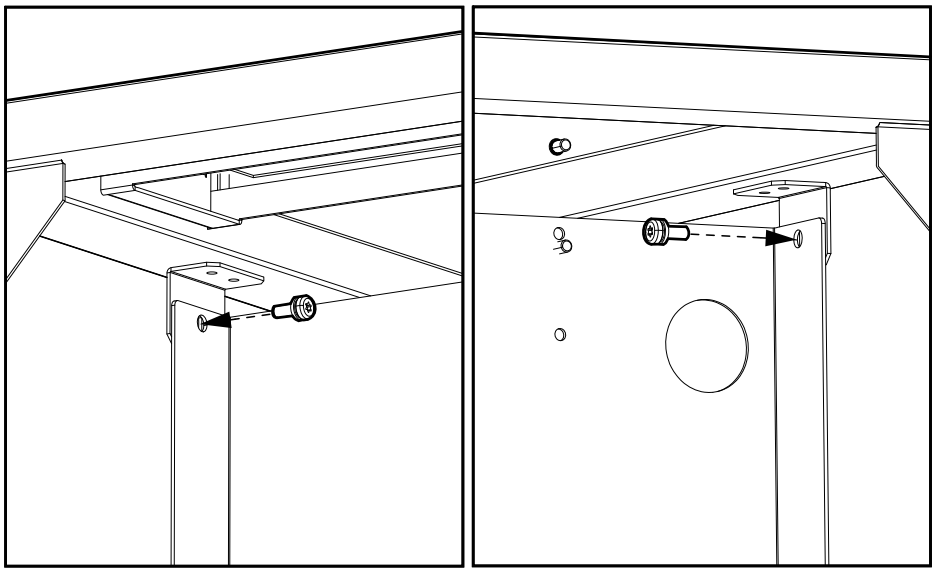

6. Install the battery breaker kit GVMBBK630EL in the top of the classic battery cabinet.

Front View of the Classic Battery Cabinet

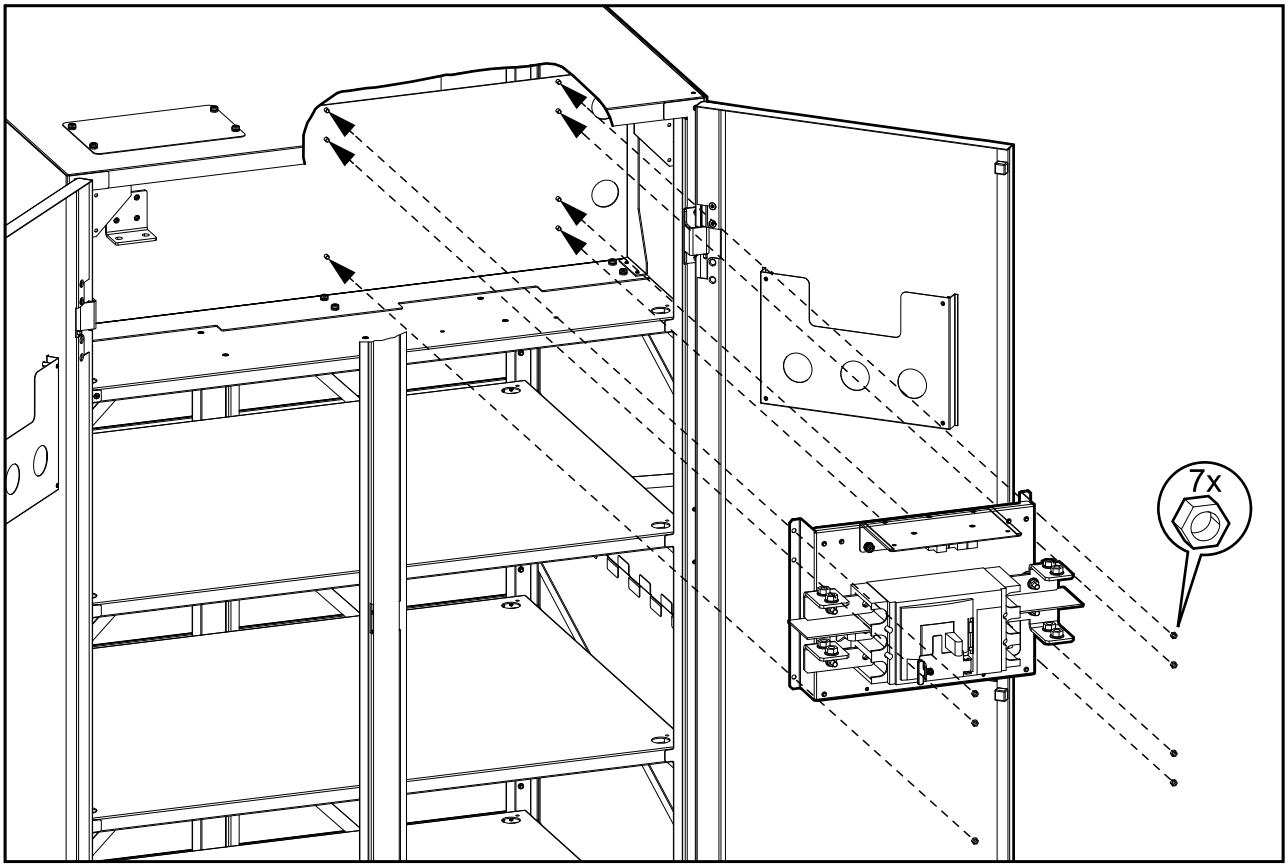

7. Remove the gland plates for (a) power cables and (b) signal cables.

Front View of the Classic Battery Cabinet

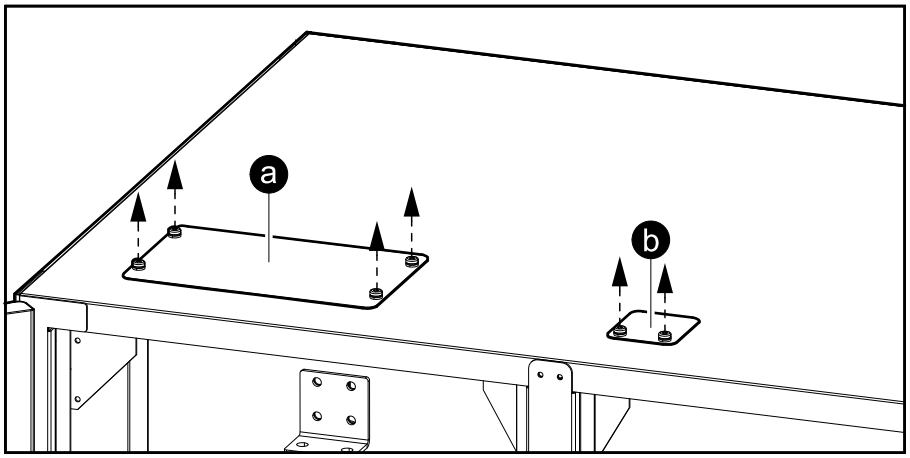

8. Drill or punch holes for power cables and signal cables in the gland plates.
9. Reinstall the gland plates.

⚠DANGER

HAZARD OF ELECTRIC SHOCK, EXPLOSION, OR ARC FLASH

Ensure that there are no sharp edges that can damage the cables.

Failure to follow these instructions will result in death or serious injury.

10. Ensure that the breaker is in the OFF position.

Front View of the Classic Battery Cabinet

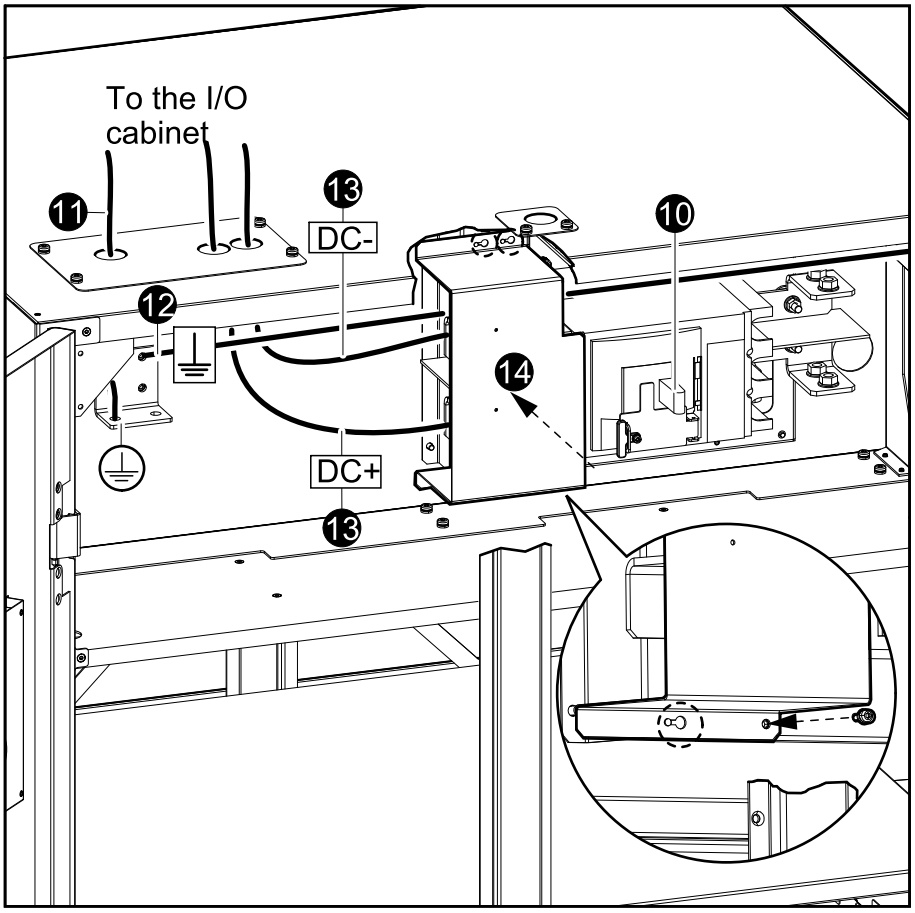

11. Connect the PE cable to the classic battery cabinet connected to the I/O cabinet.
12. If the system contains more than one battery cabinet, connect the PE cables between the classic battery cabinets.
13. Connect the DC+ and DC- cables from the I/O cabinet to the first classic battery cabinet.
14. Install the protection cover over the terminals on the left side of the battery breaker (connected to the I/O cabinet).

Install and Connect Batteries in the Classic Battery Cabinet

⚠WARNING

UNEXPECTED EQUIPMENT HANDLING

- Remove the cabinet from the wooden pallet before installing the batteries. See *Remove the Classic Battery Cabinet from the Pallet, page 12*.
- The battery cabinet must not be moved on a pallet jack after the batteries have been installed.

Failure to follow these instructions can result in death, serious injury, or equipment damage.

NOTE: The illustrations in this procedure show a bottom cable entry system. The procedure is the same for a top cable entry system.

1. Place the batteries on the shelves.

   NOTE: Do not cover the holes in the corners that are intended for cable routing between the shelves.

   Front View of the Classic Battery Cabinet

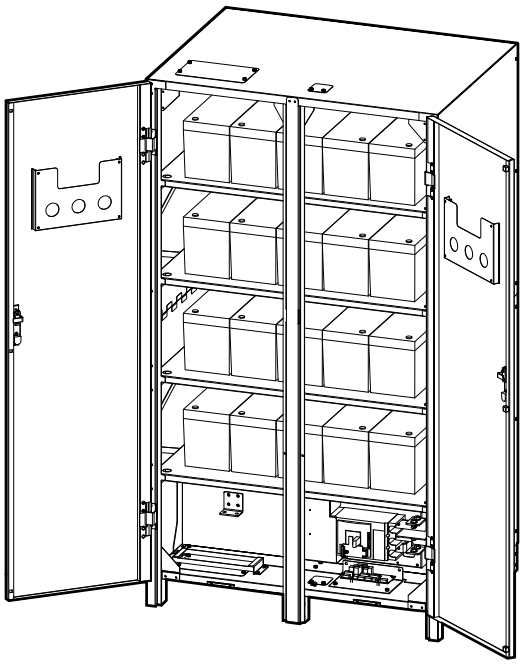

2. Connect the DC+ and DC- cables from all classic battery cabinets to the terminals on the right side of the battery breaker.

Front View of Two Classic Battery Cabinets

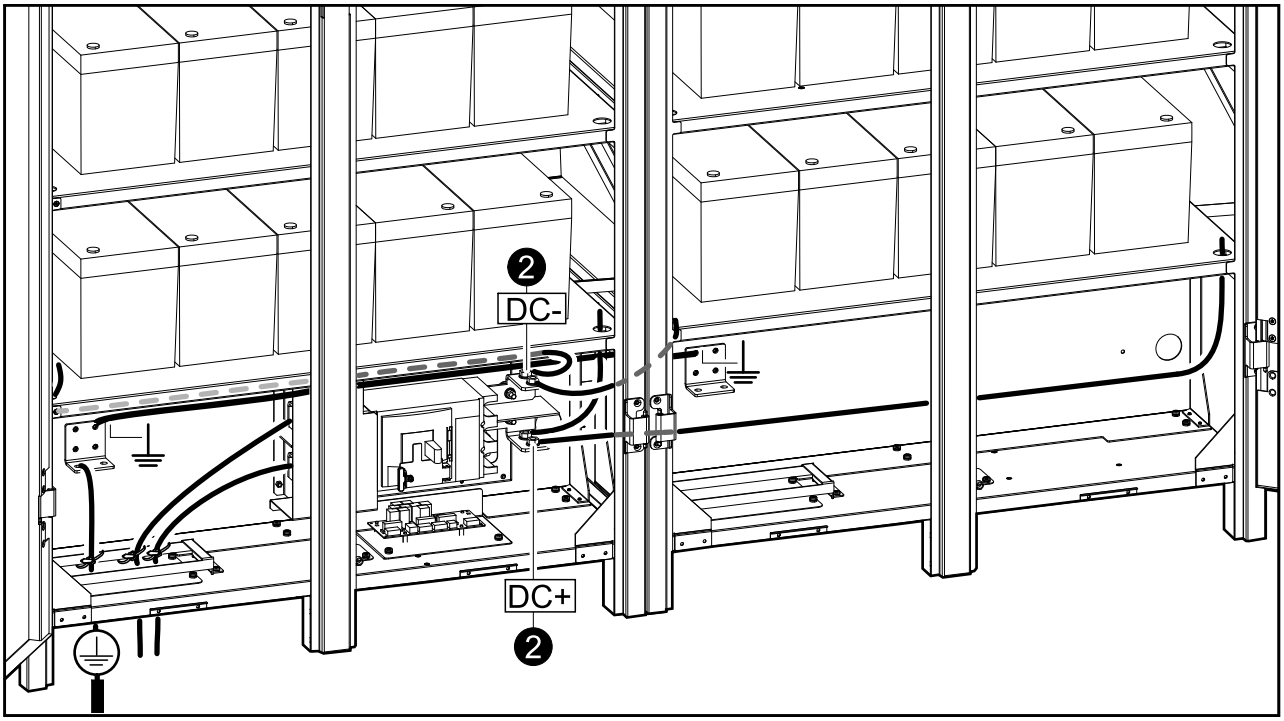

NOTE: Leave a wiring diagram with battery information in the front door of the classic battery cabinet.

3. Install the protection cover over the terminals on the right side of the battery breaker connected to the batteries.

Front View of the Classic Battery Cabinet

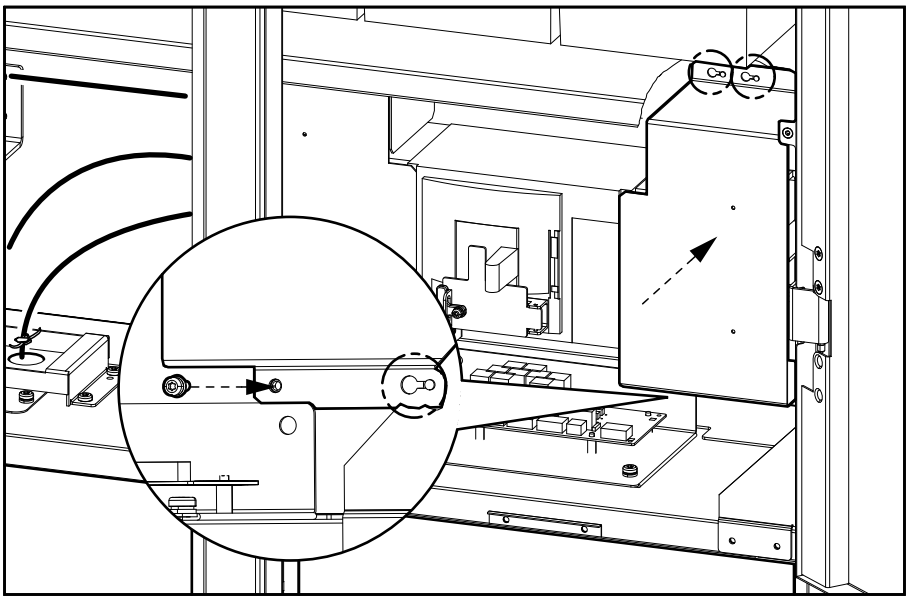

Connect the Signal Cables

NOTE: The illustrations in this procedure show a bottom cable entry system. The procedure is the same for a top cable entry system.

1. Install the temperature sensor 0M-1160 provided with the UPS in the classic battery cabinet.

Front View of the Classic Battery Cabinet

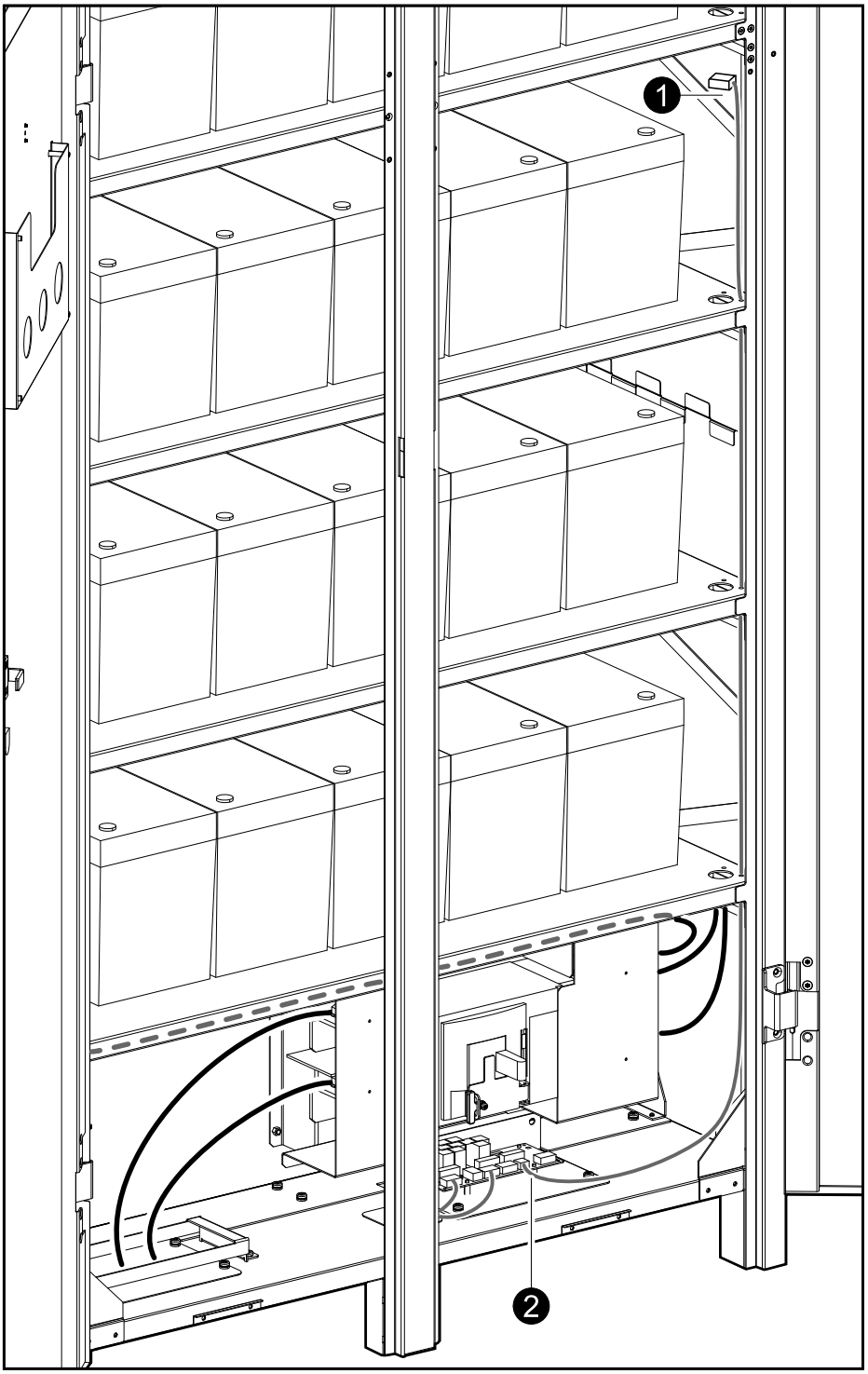

2. Connect the temperature sensor to the terminals J3803–3 and J3803–4 on the signal board.

3. Route the signal cables through either the top or the bottom of the classic battery cabinet.

Front View of the Classic Battery Cabinet

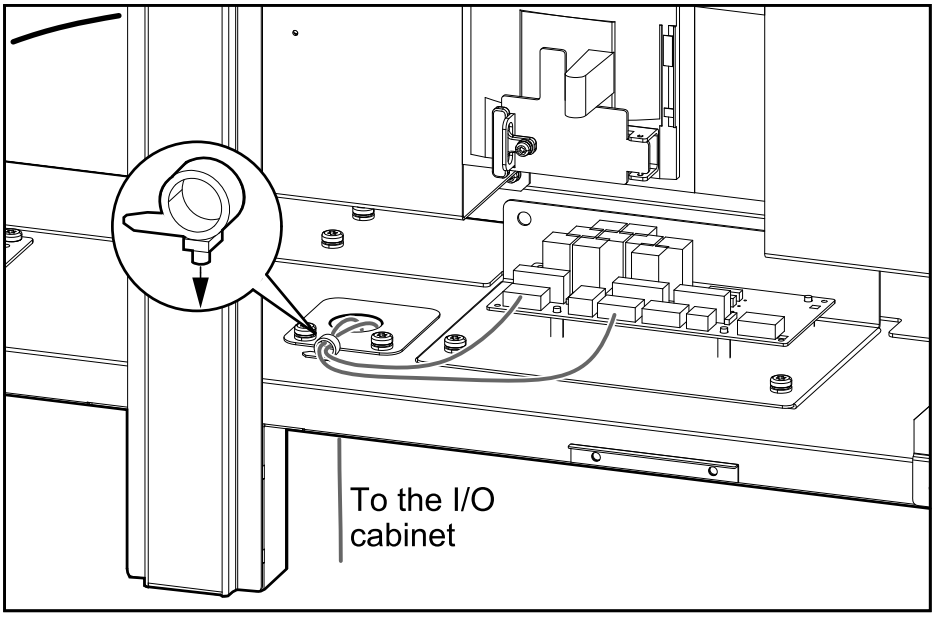

4. Connect the following signal cables between the I/O cabinet and the classic battery cabinet:

NOTE: All circuits connected must have the same 0 V reference. The signal cables must have a minimum rating of 600 V.

NOTE: Remove the jumper between J5609 pin 1 and 2 before connecting signal cables to J5609.

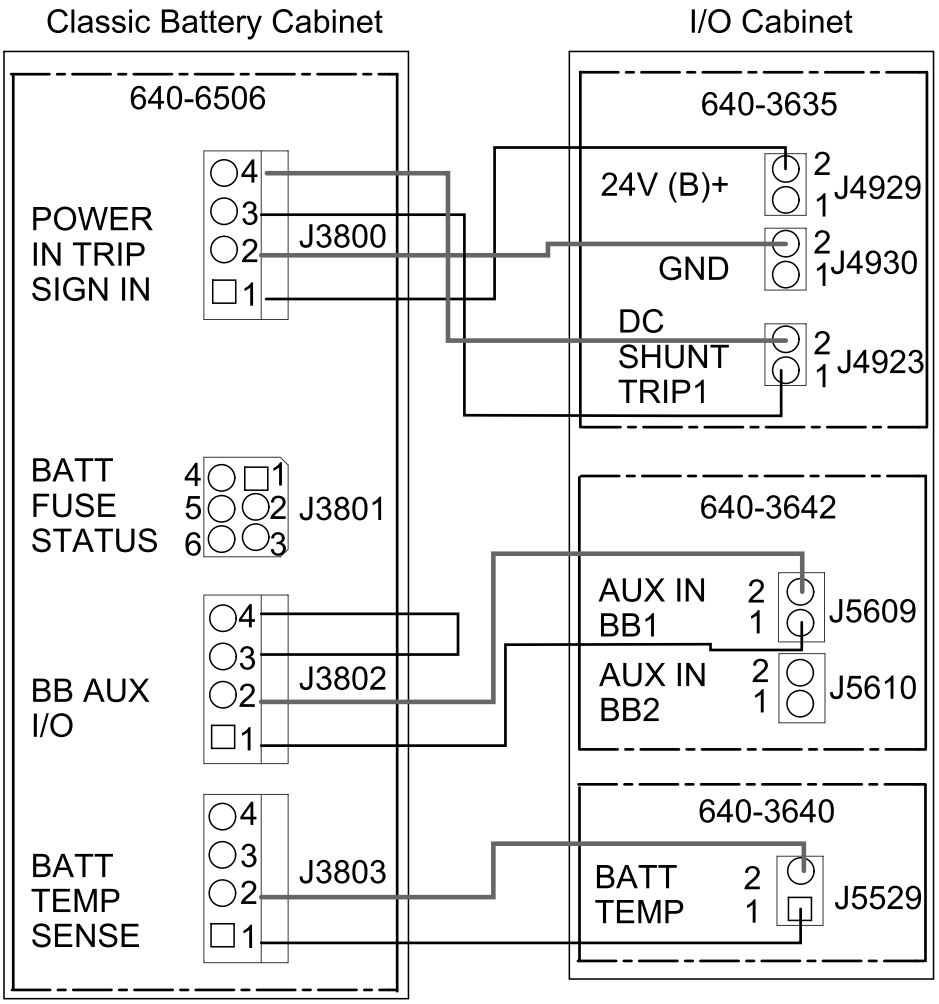

5. Reinstall the covers in front of the batteries.

Bottom Cable Entry System

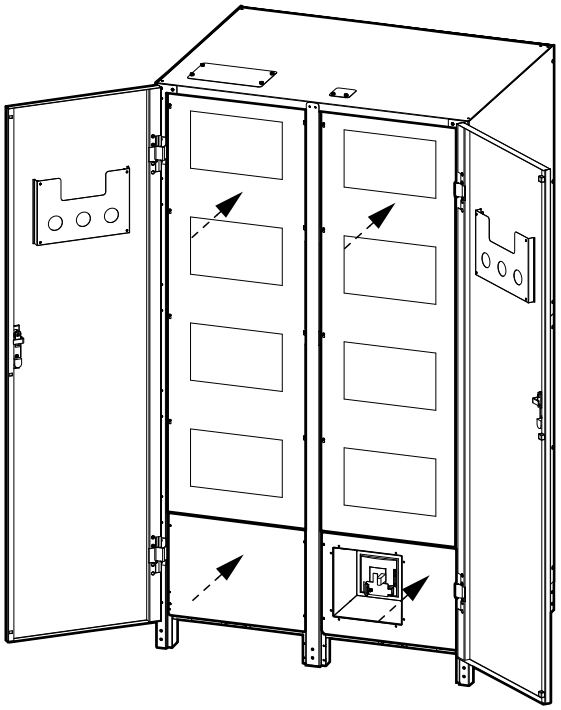

Top Cable Entry System

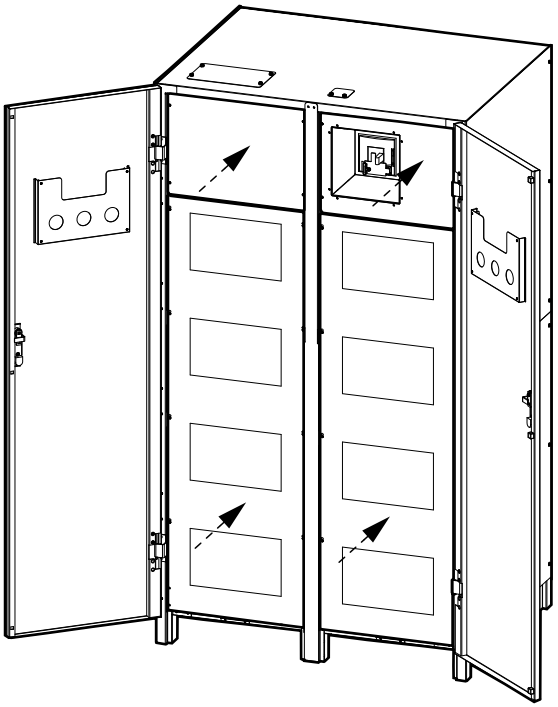

Schneider Electric
35 rue Joseph Monier
92500 Rueil Malmaison
France

+ 33 (0) 1 41 29 70 00

www.schneider-electric.com

As standards, specifications, and design change from time to time, please ask for confirmation of the information given in this publication.

© 2015 – 2015 Schneider Electric. All rights reserved.

990–9710A–001