Always there to help you

Register your product and get support at
www.philips.com/support

Question? Contact Philips

D230
D235



Extended user documentation

PHILIPS

Contents

1 Important safety instructions 3

2 Your phone 4
What is in the box 4
Overview of the phone 5
Overview of the base station 6

3 Get started 7
Connect the base station 7
Install the supplied batteries 8
Configure your phone (country dependent) 8
Change the remote access PIN (for D235) 9
Charge the handset 9
Check the battery level 9
What is standby mode? 9
Display icons 9
Check the signal strength 10
Switch the handset on or off 10

4 Calls 11
Make a call 11
Answer a call 11
End a call 11
Adjust the earpiece/speaker volume 12
Mute the microphone 12
Turn the speaker on or off 12
Make a second call 12
Answer a second call 12
Switch between two calls 12
Make a conference call with the external callers 12

5 Intercom and conference calls 13
Make a call to another handset 13
Make a conference call 13

6 Text and numbers 15
Enter text and numbers 15
Switch between uppercase and lowercase 15

7 Phonebook 16
View the phonebook 16
Search a record 16
Call from the phonebook 16
Access the phonebook during a call 16
Add a record 17
Edit a record 17
Delete a record 17
Delete all records 17

8 Call log 18
Call list type 18
View the call records 18
Save a call record to the phonebook 18
Return a call 18
Delete a call record 19
Delete all call records 19

9 Redial list 20
View the redial records 20
Redial a call 20
Save a call record to the phonebook 20
Delete a redial record 20
Delete all redial records 20

10 Phone settings 21
Sound settings 21
Name the handset 21
Set the date and time 22
Set the display language 22
ECO+ mode 22

11 Telephone answering machine 23
Turn the answering machine on or off 23
Set the answering machine language 23
Announcements 23
Incoming messages 24
Set the ring delay 25
Remote access 25

12 Privacy mode 27
Block outgoing calls 27
Block incoming calls 27

13 Services 29
Call list type 29
Auto conference 29
Network type 29
Auto prefix 29
Select the recall duration 30
Dial mode 30
Auto clock 30
Register additional handsets 30
Unregister the handsets 31
Restore default settings 31

14 Technical data 32

15 Notice 33
Declaration of conformity 33
Use GAP standard compliance 33
Compliance with EMF 33
Disposal of your old product and battery 33

16 Frequently asked questions 35

17 Appendix 37
Text and number input tables 37

1 Important safety instructions

Power requirements

- This product requires an electrical supply of 100-240 volts AC. In case of power failure, the communication can be lost.
- The voltage on the network is classified as TNV-3 (Telecommunication Network Voltages), as defined in the standard EN 60950.

Warning

- The Electrical network is classified as hazardous. The only way to power down the charger is to unplug the power supply from the electrical outlet. Ensure that the electrical outlet is always easily accessible.

To avoid damage or malfunction

Caution

- Use only the power supply listed in the user instructions.
- Use only the batteries listed in the user instructions.
- Risk of explosion if battery is replaced by an incorrect type.
- Dispose of used batteries according to the instructions.
- Do not dispose of batteries in fire.
- Always use the cables provided with the product.
- Do not allow the charging contacts or the battery to come into contact with metal objects.
- Do not let small metal objects come into contact with the product. This can deteriorate audio quality and damage the product.
- Metallic objects may be retained if placed near or on the handset receiver.
- Do not use the product in places where there are explosive hazards.
- Do not open the handset, base station or charger as you could be exposed to high voltages.
- For pluggable equipment, the socket-outlet shall be installed near the equipment and shall be easily accessible.
- Handsfree activation could suddenly increase the volume in the earpiece to a very high level: make sure the handset is not too close to your ear.
- This equipment is not designed to make emergency calls when the power fails. An alternative has to be made available to allow emergency calls.
- Do not allow the product to come into contact with liquids.
- Do not use any cleaning agents containing alcohol, ammonia, benzene, or abrasives as these may harm the set.
- Do not expose the phone to excessive heat caused by heating equipment or direct sunlight.
- Do not drop your phone or allow objects to fall on your phone.
- Active mobile phones in the vicinity may cause interference.

About operating and storage temperatures

- Operate in a place where temperature is always between 0°C to +40°C (up to 90% relative humidity).
- Store in a place where temperature is always between -20°C and +45°C (up to 95% relative humidity).
- Battery life may be shorter in low temperature conditions.

2 Your phone

Congratulations on your purchase and welcome to Philips!
To fully benefit from the support that Philips offers, register your product at www.philips.com/welcome.

What is in the box



Handset**



Base station (D230)



Base station (D235)

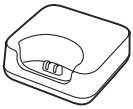

Charger (without telephone socket)**

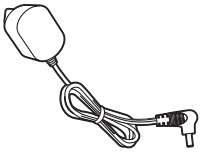

Power adapter**

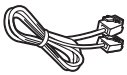

Line cord*

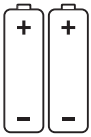

2 x AAA rechargeable batteries**



Guarantee



Short user manual

Note

- * In some countries, you have to connect the line adapter to the line cord, then plug the line cord to the telephone socket.
- ** In multi-handset packs, there are additional handsets, chargers, power adapters and batteries.

Overview of the phone

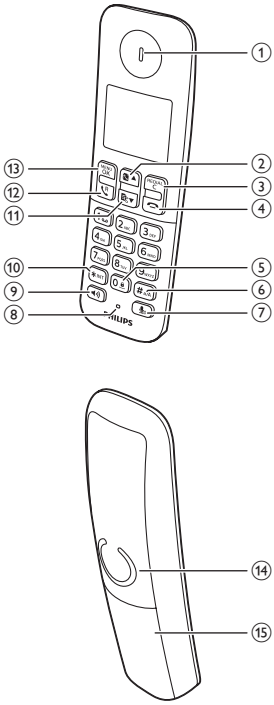

1. Earpiece
2. ▲
   - Scroll up on the menu.
   - Increase the earpiece/speaker volume.
   - Access the phonebook in standby mode.
3. REDIAL/C
   - Delete text or digits.
   - Cancel operation.
   - Access the redial list.
4.
   - End the call.
   - Exit the menu/operation.
   - Press and hold to switch the handset on or off.
5. 0
   - Press to enter a space during text editing.
   - Press and hold to lock/unlock the keypad in standby mode.
6. # a/A
   - Press and hold to enter a pause when making a call.
   - Switch to upper/lower case during editing.
7.
   - Mute or unmute the microphone.
   - Access to the answer machine menu in standby mode (for D235 only).
   - Listen to new messages from the answering machine (for D235 only).
8. Microphone
9.
   - Turn the speaker phone on/off.
   - Make and receive calls through the speaker.
10. * INT
    - Press and hold to make an intercom call (for multi-handset version only).
    - Set the dial mode (pulse mode or temporary tone mode).
11. ▼
    - Scroll down on the menu.
    - Decrease the earpiece/speaker volume.
    - Access the call log in standby mode.
12. R
    - Make and receive calls.
    - Recall key (This function is network dependent.)
13. MENU/OK
    - Access the main menu.
    - Confirm selection.
    - Enter the options menu.
    - Press to access phonebook during a call.
14. Loudspeaker
15. Battery door

Overview of the base station

D230

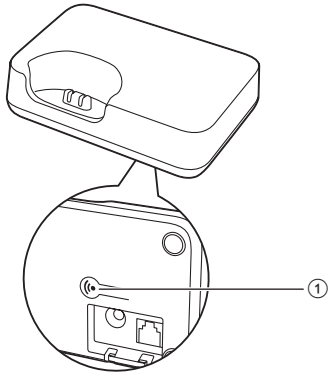

①
- Press to find handsets.
- Press and hold to enter the registration mode.

D235

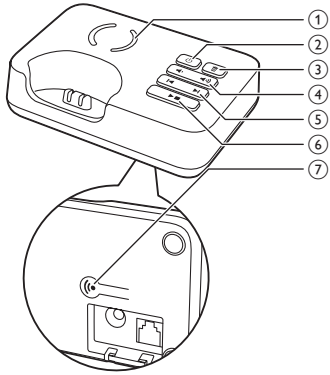

① Speaker

②
Turn the answering machine on or off.

③
- Delete the current playback message.
- Press and hold to delete all old messages.

④ /
Decrease/increase the speaker volume.

⑤ /
Skip backward/forward during playback.

⑥
- Play messages.
- Stop messages playback.

⑦
- Press to find handsets.
- Press and hold to enter the registration mode.

3 Get started

Caution

- Make sure that you have read the safety instructions in the 'Important safety instructions' section before you connect and install your handset.

Connect the base station

Warning

- Risk of product damage! Ensure that the power supply voltage corresponds to the voltage printed on the back or the underside of the phone.
- Use only the supplied power adapter to charge the batteries.

Note

- If you subscribe to the digital subscriber line (DSL) high speed internet service through your telephone line, ensure you install a DSL filter between the telephone line cord and the power socket. The filter prevents noise and caller ID problems caused by the DSL interference. For more information on the DSL filters, contact your DSL service provider.
- The type plate is located on the bottom of the base station.

1 Connect each end of the power adapter to:
   - the DC input jack at the bottom of the base station;
   - the power socket on the wall.

2 Connect each end of the line cord to:
   - the telephone socket at the bottom of the base station;
   - the telephone socket on the wall.

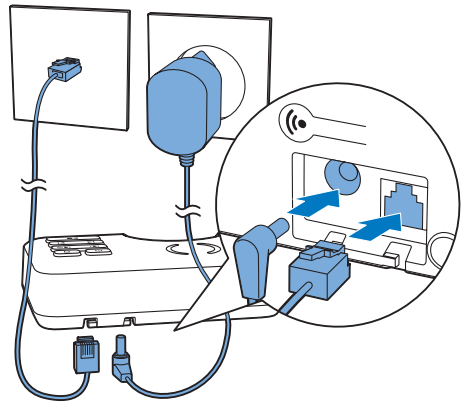

3 Connect each end of the power adapter to (for multi handset version only):
   - the DC input jack at the bottom of the extra handset charger.
   - the power socket on the wall.

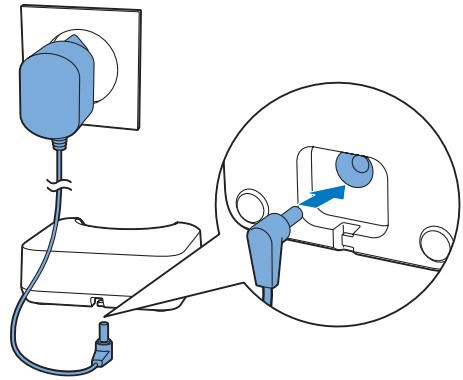

Install the supplied batteries

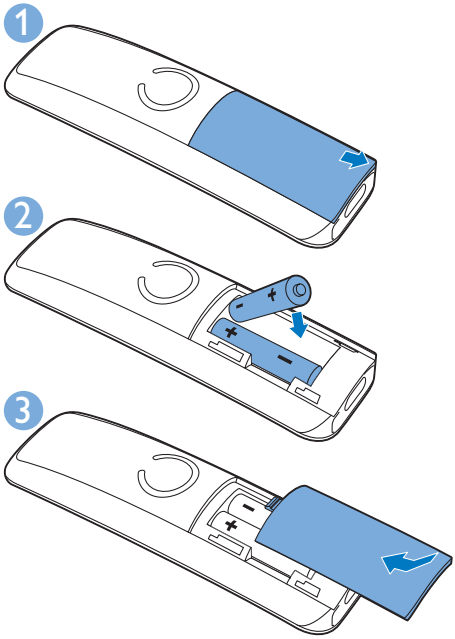

Caution

- Risk of explosion! Keep batteries away from heat, sunshine or fire. Never discard batteries in fire.
- Use only the supplied batteries.
- Risk of decreased battery life! Never mix different brands or types of batteries.

Note

- Charge the batteries for 8 hours before first use.
- If the handset becomes warm when the batteries are charging, it is normal.

Warning

- Check the battery polarity when inserting in the battery compartment. Incorrect polarity may damage the product.

Configure your phone (country dependent)

1 When using your phone for the first time, you see a welcome message.

2 Press **MENU/OK**.

Set the country/language

Select your country/language, then press **MENU/OK** to confirm.

↳ The country/language setting is saved.

Note

- The country/language setting option is country dependent. If no welcome message is displayed, it means the country/language setting is preset for your country. Then you can set the date and time.

To reset the language, see the following steps.

1 Select **MENU/OK** > **[Phone setup]** > **[Language]**, then press **MENU/OK** to confirm.

2 Select a language, then press **MENU/OK** to confirm.

↳ The setting is saved.

Set the date and time

1 Press **MENU/OK**.

2 Select **[Phone setup]** > **[Date & time]**, then press **MENU/OK** to confirm.

3 Press the numeric buttons to enter the date, then press **MENU/OK** to confirm.

↳ The time setting menu is displayed on the handset.

4 Press the numeric buttons to enter the time.

- If the time is in 12-hour format, press ▲ / ▼ to select **[am]** or **[pm]** (Country dependent).

5 Press **MENU/OK** to confirm.

Change the remote access PIN (for D235)

Note

- The default answering machine remote access PIN code is 0000 and it is important to change it to ensure the security.

1 Press or **MENU/OK** > **[Answ. Machine]**.
2 Select **[Remote access]** > **[Change PIN]**, then press **MENU/OK** to confirm.
3 Enter the old PIN, then press **MENU/OK** to confirm.
4 Enter the new PIN code, then press **MENU/OK** to confirm.
5 Enter the new PIN code again, then press **MENU/OK** to confirm.
↳ The setting is saved.

Charge the handset

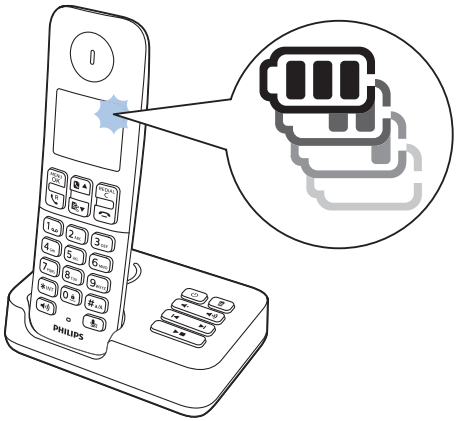

Place the handset on the base station to charge the handset. When the handset is placed correctly on the base station, you hear a docking sound.
↳ The handset starts charging.

Note

- Charge the batteries for 8 hours before first use.
- If the handset becomes warm when the batteries are being charged, it is normal.

Your phone is now ready to use.

Check the battery level

The battery icon displays the current battery level.

	When the handset is off the base station, the bars indicate the battery level (full, medium and low). When the handset is on the base station/charger, the bars flash until charging is complete.
	The empty battery icon flashes. The battery is low and needs recharging.

The handset turns off if the batteries are empty. If you are on the phone, you hear warning tones when the batteries are almost empty. The call gets disconnected after the warning.

What is standby mode?

Your phone is in standby mode when it is idle. The handset name, date and time, and handset number are displayed on the standby screen.

Display icons

In standby mode, the icons shown on the main screen tell you what features are available on your handset.

Icon	Descriptions
	When the handset is off the base station/charger, the bars indicate the battery level (from full to low). When the handset is on the base station/charger, the bars keep scrolling until charging is complete.
	The empty battery icon flashes and you hear an alert tone. The battery is low and needs recharging.
	It displays the connection status between the handset and base station. The more bars are shown, the better the signal strength is.
	It remains steadily on when browsing answered incoming calls in the call log.
	It indicates an outgoing call in the redial list.
	It flashes when there is a new missed call or when browsing the unread missed calls in call log. It remains steadily on when browsing the read missed calls in call log.
	It flashes when receiving incoming call. It remains steadily on when you are in a call.
	The speaker is on.
	The ringer is off.
	Answering machine (D235 only): it flashes when there is a new message or when the memory is full. It displays when the telephone answering machine is turned on.
	It flashes when there is a new voice message. It remains steadily on when the voice messages are already viewed in the call log. The icon is not shown when there is no voice message.
/	It is displayed when you scroll up / down a list or increase / decrease the volume.
	There are more digits on the right. Press **REDIAL/C** to read.
ECO+	The **ECO+** mode is activated.

Check the signal strength

	The number of bars indicates the connection status between the handset and base station. The more bars are shown, the better the connection is.

- Make sure the handset is connected to the base station before you make or receive calls and carry out the phone functions and features.
- If you hear warning tones when you are on the phone, the handset is almost out of battery or the handset is out of range. Charge the battery or move the handset nearer to the base station.

Note

- When **ECO+** is on, the signal strength is not displayed (see 'ECO+ mode' on page 22).

Switch the handset on or off

Press and hold to switch the handset on or off.

4 Calls

Note

- When the power fails, the phone cannot access emergency services.

Tip

- Check the signal strength before you make a call or when you are in a call (see 'Check the signal strength' on page 10).

Make a call

You can make a call in these ways:

- Normal call.
- Predial call.

You can also make a call from the redial list (see 'Redial a call' on page 20), phonebook list (see 'Call from the phonebook' on page 16) and call log (see 'Return a call' on page 18).

Normal call

1 Press or .

2 Dial the phone number.

↳ The number is dialed out.

↳ The duration of your current call is displayed.

Predial call

1 Dial the phone number.

- To erase a digit, press **REDIAL/C**.
- To enter a pause, press and hold #a/A.

2 Press or to dial out the call.

Note

- The talk time of your current call is displayed on the call timer.
- If you hear warning tones, the phone is almost out of battery or out of range. Charge the battery or move the phone close to the base station.

Answer a call

When there is an incoming call, the phone rings. Press or to answer the call.

Warning

- When the handset rings or when the handsfree is activated, keep the handset away from your ear to avoid ear damage.

Note

- The caller ID service is available if you have registered to the caller ID service with your service provider.

Tip

- When there is a missed call, a notification message appears.

Turn off the ringer of an incoming call

When the phone rings, press **REDIAL/C**.

End a call

You can end a call in these ways:

- Press ;
- Place the handset to the base station or charging cradle.

Adjust the earpiece/speaker volume

Press ▲ / ▼ to adjust the volume during a call.

↳ The earpiece/speaker volume is adjusted and the phone is back to the call screen.

Mute the microphone

1 Press during a call.

↳ The handset displays **[Mute on]**.

↳ The caller cannot hear you, but you can still hear his voice.

2 Press again to unmute the microphone.

↳ You can now communicate with the caller.

Turn the speaker on or off

Press .

Make a second call

Note

- This service is network dependent. Check with your network provider for operation.

1 Press during a call.

↳ The first call is put on hold.

2 Dial the second number.

↳ The number displayed on the screen is dialed out.

Answer a second call

Note

- This service is network dependent.

When there is a periodical beep to notify you of an incoming call, you can answer the call in these ways:

1 Press and 2 ABC to answer the call.

↳ The first call is put on hold, and you are now connected to the second call.

2 Press and 1 to end the current call and answer the first call.

Switch between two calls

Note

- This service is network dependent. Check with your network provider for operation.

Press and 2 ABC.

↳ The current call is put on hold, and you are now connected to the other.

Make a conference call with the external callers

Note

- This service is network and country dependent. Check with the service provider for operation and additional charges.

When you are connected to two calls, press , then 3 DEF.

↳ The two calls are combined and a conference call is established.

5 Intercom and conference calls

An intercom call is a call to another handset that shares the same base station. A conference call involves a conversation between you, another handset user and the outside callers.

Make a call to another handset

Note

- If the base station only has 2 registered handsets, press and hold ✱INT to make a call to another handset.

1 Press and hold ✱INT.
   ↳ For multi-handset versions, the handsets available for intercom are displayed, then go to step 2.
   ↳ For two-handset versions, the other handset rings, then go to step 3.

2 Select a handset, then press **MENU/OK** to confirm.
   ↳ The selected handset rings.

3 Press on the selected handset.
   ↳ The intercom is established.

4 Press to end the intercom call.

While you are on the phone

You can go from one handset to another during a call:

1 Press and hold ✱INT.
   ↳ The current caller is put on hold.
   ↳ For multi-handset versions, the handsets available for intercom are displayed, then go to step 2.
   ↳ For two-handset versions, the other handset rings, then go to step 3.

2 Select a handset, then press **MENU/OK** to confirm.
   ↳ Wait for the other side to answer your call.

3 Press on the selected handset.
   ↳ The intercom is established.

Switch between calls

Press and hold ✱INT to switch between the outside call and the intercom call.

Make a conference call

A 3-way conference call is between you, another handset user and the outside callers. It requires two handsets to share the same base station.

During an external call

1 Press and hold ✱INT to initiate an internal call.
   ↳ The external caller is put on hold.
   ↳ For multi-handset versions, the handsets available for intercom are displayed, then go to step 2.
   ↳ For two-handset versions, the other handset rings, then go to step 3.

2 Select a handset, then press **MENU/OK** to confirm.
   ↳ The selected handset rings.

3 Press on the selected handset.
   ↳ The intercom is established.

4 Press **MENU/OK**.
   ↳ You are now in a 3-way conference call with an external call and a selected handset.

5 Press to end the conference call.

Note

- Press R to join an ongoing conference with another handset if **[Services]** > **[Conference]** is set to **[Auto]**.

During the conference call

1 Press and hold *INT to put the external call on hold and go back to the internal call.
↪ The external call is put on hold.

2 Press **MENU/OK** to establish the conference call again.

Note

- If a handset hangs up during the conference call, the other handset remains connected to the external call.

6 Text and numbers

You can enter text and numbers for handset name, phonebook records, and other menu items.

Enter text and numbers

1. Press once or several times on the alphanumeric key to enter the selected character.
2. Press **REDIAL/C** to delete a character. Press and hold **REDIAL/C** to delete all characters. Press ▲ and ▼ to move the cursor left and right.
3. Press 0 to add a space.

Note

- For information on key mapping of characters and numbers, see the chapter 'Appendix'.

Switch between uppercase and lowercase

By default, the first letter of each word in a sentence is uppercase and the rest is lowercase. Press and hold #a/A to switch between the uppercase and lowercase letters.

7 Phonebook

This phone has a phonebook that stores up to 50 records. You can access the phonebook from the base station. Each record can have a name up to 14 characters long and a number up to 24 digits long.
You have up to 2 direct access memories (Keys 1 and 2). Depending on your country, keys 1 and 2 are preset to the voice mail number and information service number of your service provider respectively. When you press and hold on the key in standby mode, the saved phone number is dialed automatically.

Note

- The availability of direct access memory is country dependent.

View the phonebook

Note

- You can view the phonebook on one handset only each time.

1. Press ▲ or press **MENU/OK** > **[Phonebook]** > **[View]** > **MENU/OK** to access the phonebook list.
2. Select a contact and view the available information.

Search a record

You can search the phonebook records in these ways:

- Scroll the contacts list.
- Enter the first character of the contact.

Scroll the contact list

1. Press ▲ or press **MENU/OK** > **[Phonebook]** > **[View]** to access the phonebook list.
2. Press ▲ and ▼ to scroll through the phonebook list.

Enter the first character of a contact

1. Press ▲ or press **MENU/OK** > **[Phonebook]** > **[View]** to access the phonebook list.
2. Press the alphanumerical key that matches the character.
   ↳ The first record that starts with this character is displayed.

Call from the phonebook

1. Press ▲ or press **MENU/OK** > **[Phonebook]** > **[View]** > **MENU/OK** to access the phonebook list.
2. Select a contact in the phonebook list.
3. Press to make the call.

Access the phonebook during a call

1. Press **MENU/OK**.
2. Select the contact, then press **MENU/OK** to view the number.

Add a record

Note

- If your phonebook memory is full, a notification message is displayed on the handset. Delete some records to add new ones.
- When you change the number of a record, the new number will overwrite the old number.

1. Press **MENU/OK**.
2. Select **[Phonebook]** > **[Add new]**, then press **MENU/OK** to confirm.
3. Enter the name, then press **MENU/OK** to confirm.
4. Enter the number, then press **MENU/OK** to confirm.
   ↳ Your new record is saved.

Tip

- Press and hold #a/A to insert a pause.
- Press once or several times on the alphanumeric key to enter the selected character.
- Press **REDIAL/C** to delete the character. Press ▲ and ▼ to move the cursor left and right.

Edit a record

1. Press **MENU/OK**.
2. Select **[Phonebook]** > **[Edit]**, then press **MENU/OK** to confirm.
3. Select a contact, then press **MENU/OK** to confirm.
4. Edit the name, then press **MENU/OK** to confirm.
5. Edit the number, then press **MENU/OK** to confirm.
   ↳ The record is saved.

Delete a record

1. Press **MENU/OK**.
2. Select **[Phonebook]** > **[Delete]**, then press **MENU/OK** to confirm.
3. Select a contact, then press **MENU/OK** to confirm.
   ↳ A confirmation request is displayed on the handset.
4. Press **MENU/OK** to confirm.
   ↳ The record is deleted.

Delete all records

1. Press **MENU/OK**.
2. Select **[Phonebook]** > **[Delete all]**, press **MENU/OK** to confirm.
   ↳ A confirmation request is displayed on the handset.
3. Press **MENU/OK** to confirm.
   ↳ All records (except the 2 direct access memory records) are deleted.

8 Call log

The call log stores the call history of all missed or received calls. The incoming call history includes the name and number of the caller, call time and date. This feature is available if you have registered to the caller ID service with your service provider.
Your phone can store up to 20 call records. The call log icon on the handset flashes to remind you of any unanswered calls. If the caller allows the display of his identity, you can view his name or number. The call records are displayed in chronological order with the most recent received call at the top of the list.

Note

- Make sure that the number in the call list is valid before you can call back directly from the call list.

The icons shown on the screen tell you whether they are missed/received calls.

Icons	Description
	It remains steadily on when browsing incoming calls in the call log.
	It flashes when there is a new missed call. It remains steadily on when browsing the missed calls in call log.

Call list type

You can set if you can see all incoming calls or only missed calls from the call log.

Note

- This is a country dependent feature.

Select the call list type

1 Press **MENU/OK**.
2 Select **[Services]** > **[Call list type]**, then press **MENU/OK** to confirm.
3 Select an option, then press **MENU/OK** to confirm.

View the call records

1 Press ▼.
↳ The incoming call log is displayed.
2 Select a record, then press **MENU/OK** and select **[View]** for more available information.

Save a call record to the phonebook

1 Press ▼.
↳ The incoming call log is displayed.
2 Select a record, then press **MENU/OK** to confirm.
3 Select **[Save number]**, then press **MENU/OK** to confirm.
4 Enter and edit the name, then press **MENU/OK** to confirm.
5 Enter and edit the number, then press **MENU/OK** to confirm.
↳ The record is saved.

Return a call

1 Press ▼.
2 Select a record on the list.
3 Press to make the call.

Delete a call record

1 Press ▼.
↳ The incoming call log is displayed.

2 Select a record, then press **MENU/OK** to confirm.

3 Select **[Delete]**, then press **MENU/OK** to confirm.
↳ A confirmation request is displayed on the handset..

4 Press **MENU/OK** to confirm.
↳ The record is deleted.

Delete all call records

1 Press ▼.
↳ The incoming call log is displayed.

2 Press **MENU/OK** to enter the options menu.

3 Select **[Delete all]**, then press **MENU/OK** to confirm.
↳ A confirmation request is displayed on the handset..

4 Press **MENU/OK** to confirm.
↳ All records are deleted.

9 Redial list

The redial list stores the call history of dialed calls. It includes the names and/or numbers you have called. This phone can store up to 10 redial records.

View the redial records

Press **REDIAL/C**.

Redial a call

1. Press **REDIAL/C**.
2. Select a record, then press .
   ↳ The number is dialed out.

Save a call record to the phonebook

1. Press **REDIAL/C** to enter the list of dialed calls.
2. Select a record, then press **MENU/OK** to confirm.
3. Select **[Save number]**, then press **MENU/OK** to confirm.
4. Enter and edit the name, then press **MENU/OK** to confirm.
5. Enter and edit the number, then press **MENU/OK** to confirm.
   ↳ The record is saved.

Delete a redial record

1. Press **REDIAL/C** to enter the list of dialed calls.
2. Select a record, then press **MENU/OK** to confirm.
3. Select **[Delete]**, then press **MENU/OK** to confirm.
   ↳ A confirmation request is displayed on the handset..
4. Press **MENU/OK** to confirm.
   ↳ The record is deleted.

Delete all redial records

1. Press **REDIAL/C** to enter the list of dialed calls.
2. Press **MENU/OK** to enter the options menu.
3. Select **[Delete all]**, then press **MENU/OK** to confirm.
   ↳ A confirmation request is displayed on the handset..
4. Press **MENU/OK** to confirm.
   ↳ All records are deleted.

10 Phone settings

You can customize the settings to make it your own phone.

Sound settings

Set the handset's ringtone volume

You can select among 5 ringtone volume levels or **[Off]**.

1. Press **MENU/OK**.
2. Select **[Phone setup]** > **[Sounds]** > **[Ring volume]**, then press **MENU/OK** to confirm.
3. Select a volume level, then press **MENU/OK** to confirm.
   ↳ The setting is saved.

Set the handset's ringtone

You can select from 10 ringtones.

1. Press **MENU/OK**.
2. Select **[Phone setup]** > **[Sounds]** > **[Ring tones]**, then press **MENU/OK** to confirm.
3. Select a ringtone, then press **MENU/OK** to confirm.
   ↳ The setting is saved.

Set the key tone

Key tone is the sound made when you press a key on the handset.

1. Press **MENU/OK**.
2. Select **[Phone setup]** > **[Sounds]** > **[Key tone]**, then press **MENU/OK** to confirm.
3. Select **[On]**/**[Off]**, then press **MENU/OK** to confirm.
   ↳ The setting is saved.

Set the docking tone

Docking tone is the sound made when you place the handset on the base station or charger.

1. Press **MENU/OK**.
2. Select **[Phone setup]** > **[Sounds]** > **[Docking tone]**, then press **MENU/OK** to confirm.
3. Select **[On]**/**[Off]**, then press **MENU/OK** to confirm.
   ↳ The setting is saved.

Set the battery tone

Battery tone is the sound made when the battery is low and needs recharging.

1. Press **MENU/OK**.
2. Select **[Phone setup]** > **[Sounds]** > **[Battery tone]**, then press **MENU/OK** to confirm.
3. Select **[On]**/**[Off]**, then press **MENU/OK** to confirm.
   ↳ The setting is saved.

Name the handset

The name of the handset can be up to 12 characters. It is displayed on the handset screen in standby mode.

1. Press **MENU/OK**.
2. Select **[Phone setup]** > **[Phone name]**, then press **MENU/OK** to confirm.
3. Enter or edit the name. To erase a character, press **REDIAL/C**.
4. Press **MENU/OK** to confirm.
   ↳ The setting is saved.

Set the date and time

For information, see 'Set the date and time' in the 'Get started' section.

Set the display language

Note

- This feature only applies to models with multiple-language support.
- Languages available vary from country to country.

1. Press **MENU/OK**.
2. Select **[Phone setup]** > **[Language]**, then press **MENU/OK** to confirm.
3. Select a language, then press **MENU/OK** to confirm.
   ↳ The setting is saved.

ECO+ mode

When the **ECO+** mode is activated, it eliminates the radiation of the handset and base station in standby mode.

1. Press **MENU/OK**.
2. Select **[Phone setup]** >**[ECO+ mode]**, then press **MENU/OK** to confirm.
3. Select **[On]**/**[Off]**, and press **MENU/OK** to confirm.
   ↳ The setting is saved.
   ↳ **ECO+** is displayed in standby mode.

Note

- Make sure that all the handsets registered to the base station are D230/D235 in order to have the **ECO+** feature functioning properly.
- When **ECO+** is activated, the standby time is reduced. This is because in **ECO+** mode the base station is not transmitting any signal in standby mode; therefore the handset needs to "listen" more frequently for signals from the base station to detect incoming calls or other requests from the base station. The time it takes for the handset to access features like call setup, call log, paging, and phonebook browsing is also delayed. The handset will not alert you to link loss in case of power loss or moving out of range.

11 Telephone answering machine

Note

- Available only for D235.

Your phone includes a telephone answering machine that records unanswered calls when it is on. You can access the answering machine remotely and change the settings through the answering machine menu on the handset. The ▶▮ button on the base station lights up when the answering machine is on.

Turn the answering machine on or off

You can turn the answering machine on or off through the base station or the handset.

Through the handset

1 Press or MENU/OK > **[Answ. Machine]**.
2 Select **[On/off]** > **[On]**/**[Off]**, then press **MENU/OK** to confirm.
3 Select **[Record also]**/ **[Answer only]** when the answer machine is on, then press **MENU/OK** to confirm.
↳ The setting is saved.

Note

- **[Record also]** means calls are answered and messages are recorded. **[Answer only]** means calls are only answered, messages are not recorded.

↳ The setting is saved.

Through the base

Press ⏻ to turn the answering machine on or off in standby mode.

Note

- When the answering machine is switched on, it answers incoming calls after a certain number of rings based on the ring delay setting.

Set the answering machine language

Note

- This feature only applies to models with multiple-language support.

The answering machine language is the language for the announcements.

1 Press or MENU/OK > **[Answ. Machine]**.
2 Select **[Voice language]**, then press **MENU/OK** to confirm.
3 Select a language, then press **MENU/OK** to confirm.
↳ The setting is saved.

Announcements

The announcement is the message your caller hears when the answering machine picks up the call. The answering machine has 2 pre-recorded announcements: **[Record also]** and **[Answer only]**.

Record an announcement

The maximum length of the announcement you can record is 3 minutes. The newly recorded announcement automatically replaces the old one.

1 Press or MENU/OK > [Answ. Machine].
2 Select [Announcement], then press MENU/OK to confirm.
3 Select [Answer only] or [Record also], then press MENU/OK to confirm.
4 Select [Record], then press MENU/OK to confirm.
5 Start recording close to the microphone after the beep.
6 Press MENU/OK to stop recording or the recording stops after 3 minutes.
   ↳ You can listen to the newly recorded announcement on the handset.

Note

- Make sure that you speak close to the microphone when you record an announcement.

Listen to the announcement

1 Press or MENU/OK > [Answ. Machine].
2 Select [Announcement], then press MENU/OK to confirm.
3 Select [Answer only] or [Record also], then press MENU/OK to confirm.
4 Select [Play], then press MENU/OK to confirm.
   ↳ You can listen to the current announcement.

Note

- You can no longer listen to the announcement when you pick up an incoming call.

Restore the default announcement

1 Press or MENU/OK > [Answ. Machine].
2 Select [Announcement], then press MENU/OK to confirm.
3 Select [Record also]or [Answer only], then press MENU/OK to confirm.
4 Select [Use default], then press MENU/OK to confirm.
   ↳ A confirmation request is displayed on the handset.
5 Press MENU/OK to confirm.
   ↳ The default announcement is restored.

Incoming messages

Each message can be up to 3 minutes long. When you receive new messages, the new message indicator flashes on the answering machine and the handset.

Note

- If you pick up the phone when the caller leaves a message, the recording stops and you can talk to the caller directly.
- If the memory is full, the answering machine switches to [Answer only] automatically. Delete old messages to receive new ones.

Listen to the incoming messages

You can listen to the incoming messages in the sequence they are recorded.

From the base

- To start/stop listening, press ▶■.
- To adjust the volume, press 🔉 / 🔊.
- To play the previous message/replay the current message, press ⏮.
- To play the next message, press ⏭.
- To delete the current message, press 🗑.

Note

- No deleted messages can be recovered.

From the handset

- If there are new messages, press to listen. If there is no new message, press , then **MENU/OK** to listen to old messages.
- Press **MENU/OK** > **[Answ. Machine]** > **[Play]**, then press **MENU/OK** to confirm.
  ↳ New messages start playing. Old messages start playing if there is no new message.
- Press **REDIAL/C** to stop listening.
- Press **MENU/OK** to enter the options menu.
- Press ▲ / ▼ to increase/decrease the volume.

Delete an incoming message

From the base

Press when you listen to the message.
↳ The current message is deleted.

From the handset

1. When you listen to the message, press **MENU/OK** to enter the options menu.
2. Select **[Delete]**, then press **MENU/OK** to confirm.
   ↳ The current message is deleted.

Delete all old incoming messages

Press and hold on the base station in standby mode.
↳ All old messages are permanently deleted.

From the handset

1. Press or **MENU/OK** > **[Answ. Machine]**
2. Select **[Delete all]**, then press **MENU/OK** to confirm.
   ↳ A confirmation request is displayed on the handset.
3. Press **MENU/OK** to confirm.
   ↳ All old messages are permanently deleted.

Note

- You can only delete the read messages. No deleted messages can be recovered.

Set the ring delay

You can set the number of times the phone rings before the answering machine picks up the call.

1. Press or **MENU/OK** > **[Answ. Machine]**
2. Select **[Ring delay]**, then press **MENU/OK** to confirm.
3. Select a new setting, then press **MENU/OK** to confirm.
   ↳ The setting is saved.

Note

- Make sure that the answering machine is switched on before this feature can be applied.

Tip

- When you access the answering machine remotely, you are recommended to set the ring delay to **[Toll saver]** mode. This is a cost effective way to manage your messages. When there are new messages, the answering machine picks up the call after 3 rings; When there is no messages, it picks up the call after 5 rings.

Remote access

You can operate your answering machine when you are away from home. Simply make a call to your phone with a touch tone phone and enter your 4-digit PIN code.

Note

- The remote access PIN code is the same as your system PIN. The preset PIN is 0000.

Activate/deactivate the remote access

You can allow or block remote access to the answering machine.

1 Press or **MENU/OK** > **[Answ. Machine]**
2 Select **[Remote access]**, then press **MENU/OK** to confirm.
3 Select **[Activate]**/**[Deactivate]**, then press **MENU/OK** to confirm.
↳ The setting is saved.

Change the PIN code

1 Press or **MENU/OK** > **[Answ. Machine]**.
2 Select **[Remote access]** > **[Change PIN]**, then press **MENU/OK** to confirm.
3 Enter the old PIN, then press **MENU/OK** to confirm.
4 Enter the new PIN code, then press **MENU/OK** to confirm.
5 Enter the new PIN code again, then press **MENU/OK** to confirm.
↳ The setting is saved.

Access the answering machine remotely

1 Make a call to your home number with a touch tone phone.
2 Enter # when you hear the announcement.
3 Enter your PIN code.
↳ You now have access to your answering machine, and you can now listen to the new messages.

Note

- You have 2 chances to enter the correct PIN code before your phone hangs up.

4 Press a key to carry out a function. See the Remote access commands table below for a list of available functions.

Note

- When there is no message, the phone hangs up automatically if no key is pressed for 8 seconds.

Remote access commands

Key	Function
1	Listen to the previous message.
2	Listen to messages.
3	Skip to the next message.
6	Delete the current message.
7	Switch the answering machine on (not available when you listen to the messages).
8	Stop listening to the message.
9	Switch the answering machine off. (not available when you listen to the messages).

Behavior of the LED display on the base station

The table below shows you the current status with different LED display behavior on the base station.

LED display	Message status
Steady on	• There is no new message and the memory is not full. • The handset is on. • Enter the paging mode.
Flashing	• There is a new message and the memory is not full. • There is an incoming call. • Recording an incoming message/announcement. • Listen to messages. • Remote access/listen to messages from the handset.
Flashing (Fast)	• There is a new or no new message and the memory is full. • Enter the registration mode.

12 Privacy mode

You can access the privacy mode menu to block outgoing and incoming calls.

Block outgoing calls

You can block outgoing calls to numbers, such as overseas calls or undesirable hotlines by barring calls that start with certain digits. You can create 2 sets of numbers with 4 digits at maximum for each set of numbers. When you make a call that starts with one of these 2 sets of numbers, the outgoing call is then barred.

Activate/deactivate the outgoing call block mode

1. Press **MENU/OK**.
2. Select **[Privacy mode]**, then press **MENU/OK** to confirm.
3. Enter the outgoing call block PIN/passcode. The default PIN/passcode is 0000. Then press **MENU/OK** to confirm.
4. Select **[Call barring]** > **[Barring mode]** > **[On]**/**[Off]**, then press **MENU/OK** to confirm.
   ↳ The setting is saved.

Add new numbers to the outgoing call block list

1. Press **MENU/OK**.
2. Select **[Privacy mode]**, then press **MENU/OK** to confirm.
3. Enter the outgoing call block PIN/passcode. The default PIN is 0000. Then press **MENU/OK** to confirm.
4. Select **[Call barring]** > **[Barring number]**, then press **MENU/OK** to confirm.
5. Select a number from the list, then press **MENU/OK** to confirm.
6. Edit the number, then press **MENU/OK** to confirm.
   ↳ The setting is saved.

Change the outgoing call block PIN/passcode

1. Press **MENU/OK**.
2. Select **[Privacy mode]**, then press **MENU/OK** to confirm.
3. Enter the old outgoing call block PIN/passcode. The default PIN is 0000. Then press **MENU/OK** to confirm.
4. Select **[Call barring]** > **[Change PIN]**, then press **MENU/OK** to confirm.
5. Enter the new PIN/passcode, then press **MENU/OK** to confirm.
6. Enter the new PIN/passcode again, then press **MENU/OK** to confirm.
   ↳ The setting is saved.

Block incoming calls

You can put numbers into the blacklist to block incoming calls from certain undesirable numbers. You can create 4 sets of numbers with 24 digits at maximum for each set of numbers. When there is an incoming call that starts with one of these 4 sets of numbers, the ringer will be muted.

Note

- Make sure you have subscribed to the caller ID service before you use this feature.
- The contact's name in phonebook will not be displayed if this contact's number matches the record saved in the blacklist.

Activate/deactivate the blacklist

1. Press **MENU/OK**.
2. Select **[Privacy mode]**, then press **MENU/OK** to confirm.
3. Enter the incoming call block PIN/passcode. The default PIN is 0000. Then press **MENU/OK** to confirm.
4. Select **[Call block]** > **[Block mode]** > **[On]**/**[Off]**, then press **MENU/OK** to confirm.
   ↳ The setting is saved.

Add blacklist numbers

1. Press **MENU/OK**.
2. Select **[Privacy mode]**, then press **MENU/OK** to confirm.
3. Enter the incoming call block PIN/passcode. The default PIN is 0000. Then press **MENU/OK** to confirm.
4. Select **[Call block]** > **[Block number]**, then press **MENU/OK** to confirm.
5. Enter the number, then press **MENU/OK** to confirm.
   ↳ The setting is saved.

Change the blacklist PIN/passcode

1. Press **MENU/OK**.
2. Select **[Privacy mode]**, then press **MENU/OK** to confirm.
3. Enter the old incoming call block PIN/passcode. The default PIN is 0000. Then press **MENU/OK** to confirm.
4. Select **[Call block]**> **[Change PIN]**, then press **MENU/OK** to confirm.
5. Enter the new PIN/passcode, then press **MENU/OK** to confirm.
6. Enter the new PIN/passcode again, then press **MENU/OK** to confirm.
   ↳ The setting is saved.

13 Services

The phone supports a number of features that help you handle and manage the calls.

Call list type

You can set if you can see all incoming calls or only missed calls from the call log.

Note

- This is a country dependent feature.

Select the call list type

1. Press **MENU/OK**.
2. Select **[Services]**> **[Call list type]**, then press **MENU/OK** to confirm.
3. Select an option, then press **MENU/OK** to confirm.

Auto conference

To join an external call with another handset, press R.

Note

- This feature is available only for multi-handset versions.

Activate/Deactivate auto conference

1. Press **MENU/OK**.
2. Select **[Services]** > **[Conference]**, then press **MENU/OK** to confirm.
3. Select **[Auto]**/**[Off]**, then press **MENU/OK** to confirm.
   ↳ The setting is saved.

Network type

Note

- This is a country dependent feature. It only applies to models with network type support.

1. Press **MENU/OK**.
2. Select **[Services]** > **[Network type]**, then press **MENU/OK**.
3. Select a network type, then press **MENU/OK**.
   ↳ The setting is saved.

Auto prefix

This feature checks and formats your outgoing call number before it is dialed out. The prefix number can replace the detect number you set in the menu. For example, you set 604 as the detect number and 1250 as the prefix. When you have dialed out a number such as 6043338888, your phone changes the number to 12503338888 when it dials out.

Note

- The maximum length of a detect number is 5 digits. The maximum length of an auto prefix number is 10 digits.
- This is a country dependent feature.

Set auto prefix

1. Press **MENU/OK**.
2. Select **[Services]** > **[Auto prefix]**, then press **MENU/OK** to confirm.
3. Enter the detect number, then press **MENU/OK** to confirm.
4. Enter the prefix number, then press **MENU/OK** to confirm.
   ↳ The setting is saved.

Note

- To enter a pause, press and hold #a/A.
- If the prefix number is set and the detect number is left empty, the prefix number is added to all outgoing calls.
- The feature is unavailable if the dialed number starts with * and #.

Select the recall duration

Make sure that the recall time is set correctly before you can answer a second call. In normal case, the phone is already preset for the recall duration. You can select among 3 options: **[Short]**, **[Medium]** and **[Long]**. The number of available options varies with different countries. For details, consult your service provider.

1. Press **MENU/OK**.
2. Select **[Services]** > **[Recall time]**, then press **MENU/OK** to confirm.
3. Select an option, then press **MENU/OK** to confirm.
   ↳ The setting is saved.

Dial mode

Note

- This feature only applies to models that support both tone and pulse dial.

Dial mode is the telephone signal used in your country. The phone supports tone (DTMF) and pulse (rotary) dial. Consult the service provider for detailed information.

Set the dial mode

1. Press **MENU/OK**.
2. Select **[Services]** > **[Dial mode]**, then press **MENU/OK** to confirm.
3. Select a dial mode, then press **MENU/OK** to confirm.
   ↳ The setting is saved.

Note

- If your phone is in pulse dial mode, press *INT during a call for temporary tone mode. Digits entered for this call are then sent out as tone signals.

Auto clock

Note

- This service is network dependent.
- Make sure you have subscribed to the caller ID service before you use this feature.

It synchronizes the date and time on your phone with the public switched telephone network (PSTN) automatically. For the date to be synchronized, make sure the current year is set.

1. Press **MENU/OK**.
2. Select **[Services]** > **[Auto clock]**, then press **MENU/OK** to confirm.
3. Select **[On]**/**[Off]**. Press **MENU/OK**.
   ↳ The setting is saved.

Register additional handsets

You can register additional handsets to the base station. The base station can register up to 4 handsets.

1. You can register your handset as follows:
   - If the handset is in **[Unregistered]** status, press **MENU/OK**.
   - If the handset is in **[searching]** and **[Unavailable]** status, press **MENU/OK** > **[Services]** > **[Register]** > **MENU/OK**.

2 Press and hold •)) on the base station for 10 seconds.

Note

- For models with an answering machine, you hear a confirmation beep indicating that the base is now in registration mode.

3 Enter the system PIN. Press **REDIAL/C** to make corrections. Then press **MENU/OK** to confirm the PIN.
   ↳ Registration is complete in less than 2 minutes. The base automatically assigns a handset number to the handset.

Note

- If the PIN is incorrect or no base is found within a certain period, a notification message will be displayed on your handset.
- If registration fails, unplug the power adapter from the base station and plug it back. Wait for 15 seconds, and then repeat the registration procedure.
- The preset PIN is 0000. No change can be made on it.

Unregister the handsets

1 Press **MENU/OK**.
2 Select **[Services]** > **[Unregister]**, then press **MENU/OK** to confirm.
3 Enter the system PIN. (The preset PIN is 0000). Press **REDIAL/C** to remove the number.
4 Select the handset to be unregistered.
5 Press **MENU/OK** to confirm.
   ↳ The handset is unregistered.

Tip

- The handset name is displayed beside the handset number in standby mode.

Note

- A handset cannot unregister itself.

Restore default settings

You can reset your phone settings to the original factory settings.

1 Press **MENU/OK**.
2 Select **[Services]** > **[Reset]**, then press **MENU/OK** to confirm.
   ↳ A confirmation request is displayed on the handset.
3 Press **MENU/OK** to confirm.
   ↳ All settings (except the phonebook and direct access keys information) are reset.

14 Technical data

General specification and features

- Talk time: 16 hours
- Standby time: 200 hours
- Range indoor: 50 meters
- Range outdoor: 300 meters
- Phonebook list with 50 entries
- Redial list with 10 entries
- Call log with 20 entries
- Answering machine with 25 minutes recording time
- Caller identification standard support: FSK, DTMF

Battery

- Philips: 2 x AAA Ni-MH 1.2V 500 mAh rechargeable batteries

Power adapter

Base and charger

- Tenpao: S003GB0600050, input: 100-240 V~, 50/60 Hz 150 mA, output: 6 Vdc 500 mA

Power consumption

- Power consumption in standby mode: around 0.7 W (D230), 0.75 W (D235)

Weight and dimensions (D230)

- Handset: 108.5 grams
  47 x 23.6 x 156 mm (H x W x D)
- Base: 67.5 grams
  109.8 x 72.6 x 27.8 mm (H x W x D)
- Charger: 37 grams
  74 x 68.7 x 27.5 mm (H x W x D)

Weight and dimensions (D235)

- Handset: 108.5 grams
  47 x 23.6 x 156 mm (H x W x D)
- Base: 86.5 grams
  109.8 x 72.6 x 29 mm (H x W x D)
- Charger: 37 grams
  74 x 68.7 x 27.5 mm (H x W x D)

15 Notice

Declaration of conformity

Hereby, Gibson Innovations declares that this product is in compliance with the essential requirements and other relevant provisions of Directive 1999/5/EC. You can find the Declaration of Conformity on www.p4c.philips.com.

Use GAP standard compliance

The GAP standard guarantees that all DECT™ GAP handsets and base stations comply with a minimum operating standard irrespective of their make. The handset and base station are GAP compliant, which means they guarantee the minimum functions: register a handset, take the line, make a call and receive a call. The advanced features may not be available if you use them with other makes. To register and use this handset with a GAP compliant base station of different make, first follow the procedure described in the manufacturer's instructions, then follow the procedure described in this manual for registering a handset. To register a handset from different make to the base station, put the base station in registration mode, then follow the procedure described in the handset manufacturer's instructions.

Compliance with EMF

This product complies with all applicable standards and regulations regarding exposure to electromagnetic fields.

Disposal of your old product and battery



Your product is designed and manufactured with high quality materials and components, which can be recycled and reused.



This symbol on a product means that the product is covered by European Directive 2012/19/EU.



This symbol means that the product contains batteries covered by European Directive 2013/56/EU which cannot be disposed of with normal household waste.
Inform yourself about the local separate collection system for electrical and electronic products and batteries. Follow local rules and never dispose of the product and batteries with normal household waste. Correct disposal of old products and batteries helps prevent negative consequences for the environment and human health.

Removing the disposable batteries

To remove the disposable batteries, see section 'Install the supplied batteries'.



When this logo is attached to a product, it means a financial contribution has been paid to the associated national recovery and recycling system.

Environmental information

All unnecessary packaging has been omitted. We have tried to make the packaging easy to separate into three materials: cardboard (box),

polystyrene foam (buffer) and polyethylene (bags, protective foam sheet.)
Your system consists of materials which can be recycled and reused if disassembled by a specialized company. Please observe the local regulations regarding the disposal of packaging materials, exhausted batteries and old equipment.

16 Frequently asked questions

No signal bar is displayed on the screen.

- The handset is out of range. Move it closer to the base station.
- If the handset displays **[Unregistered]**, register your handset.

Tip

- For further information, see the chapter 'Services', section 'Register additional handsets'.

If I fail to pair (register) the additional handsets to the base station, what do I do?

Your base memory is full. Unregister the unused handsets and try again.

Tip

- For further information, see the chapter 'Services', section 'Unregister the handsets'.

My handset is in searching or unavailable status, what do I do?

- Make sure that the base station has power supply.
- Register the handset to the base station.
- Move the handset closer to the base station.

The handset loses connection with the base or the sound is distorted during a call.

- Check if the **ECO+** mode is activated. Turn it off to increase the handset range and enjoy the optimal call conditions.
- Re-register the handset to the base station.

No dialing tone.

- Check your phone connections.
- The handset is out of range. Move it closer to the base station.

No docking tone.

- The handset is not placed properly on the base station/charger.
- The charging contacts are dirty. Disconnect the power supply first and clean the contacts with a damp cloth.

I cannot change the settings of my voice mail, what do I do?

The voice mail service is managed by your service provider but not the phone itself. Contact your service provider to change the settings.

The handset on the charger does not charge.

- Make sure the batteries are inserted correctly.
- Make sure the handset is placed properly on the charger. The battery icon animates when charging.
- Make sure the docking tone setting is turned on. When the handset is placed correctly on the charger, you can hear a docking tone.
- The charging contacts are dirty. Disconnect the power supply first and clean the contacts with a damp cloth.
- Batteries are defective. Purchase new ones with the same specifications.

No display.

- Make sure the batteries are charged.
- Make sure there is power and the phone is connected.

Bad audio (crackles, echo, etc.).

- The handset is nearly out of range. Move it closer to the base station.
- The phone receives interference from the nearby electrical appliances. Move the base station away from them.
- The phone is at a location with thick walls. Move the base away from them.

The handset does not ring.

- Make sure the handset ringtone is turned on.
- Make sure the handset is registered to the base station.

The caller ID does not display.

- The service is not activated. Check with your service provider.
- The caller's information is withheld or unavailable.

The handset cannot display characters * and #.

Characters * and # respectively appear as small 'n' and small 'o' in the LCD display. This is normal behavior because of the 7-segment in the 2nd row of the display (you can find the characters on these 4 buttons: *INT and #a/A).

Note

- If the above solutions do not help, disconnect the power supply from both the handset and base station. Try again after 1 minute.

17 Appendix

Text and number input tables

Key	Upper case characters (for English/ French/ German/ Italian/Turkish/ Portuguese/Spanish/Dutch/Danish/ Finnish/Norwegian/ Swedish/Romanian/ Polish/Czech/Hungarian/Slovakian/ Slovenian/Croatian/Lithuanian/Estonian/ Latvian/Bulgarian)
0	Space . 0 , / : ; " ' ! ¡ ? ¿ * + - % \ ^ ~ |
1	1 @ _ # = < > ( ) & € £ $ ¥ [ ] { } ¤ § …
2	A B C 2 À Â Æ Á Ã Ä Å Ą Ā Ç Č
3	D E F 3 È É Ê Ë Ė Ę Ē Δ Φ
4	G H I 4 Ğ Í Ï Į Ī Ì Γ
5	J K L 5 Λ
6	M N O 6 Ñ Ó Ô Õ Ö
7	P Q R S 7 Ş Š Π Θ Σ
8	T U V 8 Ù Ú Ü Ū Ų
9	W X Y Z 9 Ø Ω Ξ Ψ Ž

Key	Lower case characters (for English/ French/ German/ Italian/Turkish/ Portuguese/Spanish/Dutch/Danish/ Finnish/Norwegian/Swedish)
0	Space . 0 , / : ; " ' ! ¡ ? ¿ * + - % \ ^ ~ |
1	1 @ _ # = < > ( ) & € £ $ ¥ [ ] { } ¤ § …
2	a b c 2 à â æ á ã ä å ą ā ç č
3	d e f 3 è é ê ë ė ę ē Δ Φ
4	g h i 4 ğ í ì ï į ī ı Γ
5	j k l 5 Λ
6	m n o 6 ñ ó ô õ ö ò
7	p q r s 7 β ş š Π Θ Σ
8	t u v 8 ù ú ü ū ų µ
9	w x y z 9 ø Ω Ξ Ψ ž

Key	Upper case characters (for Greek)
0	Space . 0 , / : ; " ' ! ¡ ? ¿ * + - % \ ^ ~ |
1	1 @ _ # = < > ( ) & € £ $ ¥ [ ] { } ¤ § …
2	A B Γ 2 A B C Æ Ä Å Ç
3	Δ E Z 3 D E F É
4	H Θ I 4 G H I
5	K Λ M 5 J K L
6	N Ξ O 6 M N O Ñ Ö
7	Π P Σ 7 P Q R S
8	T Y Φ 8 T U V Ü
9	X Ψ Ω 9 W X Y Z Ø

Key	Lower case characters (for Greek)
0	Space . 0 , / : ; " ' ! ¡ ? ¿ * + - % \ ^ ~ |
1	1 @ _ # = < > ( ) & € £ $ ¥ [ ] { } ¤ § …
2	α β γ 2 a b c à æ ä å
3	δ ε ζ 3 d e f è é
4	η θ ι 4 g h i ì
5	κ λ μ 5 j k l Λ
6	ν ξ o 6 m n o ñ ö ò
7	π ρ σ ς 7 p q r s ß
8	τ υ φ 8 t u v ù ü
9	χ ψ ω 9 w x y z ø

Key	Upper case characters (for Serbian)
0	Space . 0 , / : ; " ' ! ¡ ? ¿ * + - % \ ^ ~ |
1	1 @ _ # = < > ( ) & € £ $ ¥ [ ] { } ¤ § …
2	A B C Ђ Ć Č 2 А Б В Г
3	D E F J Đ 3 Д Е Ж З Δ Φ
4	G H I Љ 4 И Й К Λ Г
5	J K L Њ 5 М Н О П Λ
6	M N O Ћ 6 Р С Т У
7	P Q R S Ж Ķ Š 7 Ф Х Ц Ч П Θ Σ ß
8	T U V 8 Ш Щ Ъ Ы
9	W X Y Z Ž 9 Ь Э Ю Я Ω Ξ Ψ

Key	Lower case characters (for Serbian)
0	Space . 0 , / : ; " ' ! ¡ ? ¿ * + - % \ ^ ~ |
1	1 @ _ # = < > ( ) & € £ $ ¥ [ ] { } ¤ § …
2	a b c Ђ Ć Č 2 А Б В Г
3	d e f J Đ 3 Д Е Ж З
4	g h i Љ 4 И Й К Λ
5	j k l Њ 5 М Н О П

6	m n o Ћ 6 Р С Т У
7	p q r s Ж Š 7 Ф Х Ц Ч П Θ Σ ß
8	t u v Ij 8 Ш Щ Ъ Ы
9	w x y z Ž 9 Ь Э Ю Я Ω Ξ Ψ



2015 © Gibson Innovations Limited. All rights reserved.
This product has been manufactured by, and is sold under the responsibility of Gibson Innovations Ltd., and Gibson Innovations Ltd. is the warrantor in relation to this product.
Philips and the Philips Shield Emblem are registered trademarks of Koninklijke Philips N.V. and are used under license from Koninklijke Philips N.V.

CE 0168

UM_D230_235_63_90_EN_V1.0
wk1530